EVIQO

EVIPOWER™ by EVIQO™

EVIPOWER - your home superpower.

Installation Guide

Electric Vehicle Smart Charger

ATTENTION:
Installers, please read this guide thoroughly.

Disclaimer of Warranties and Limitation of Liabilities

All information, specifications and illustrations in this manual are based on the latest information available at the time of printing. EVIQO TECHNOLOGIES LIMITED reserves the right to make changes at any time without notice. While information of this manual has been carefully checked for accuracy, no guarantee is given for the completeness and correctness of the contents, including but not limited to the product specifications, functions, and illustrations. EVIQO TECHNOLOGIES LIMITED will not be liable for any direct, special, incidental, indirect damages or any economic consequential damages (including the loss of profits). It is the user's responsibility to comply with all relevant codes and safety standards.

The EVIPOWER Smart EV Charger by EVIQO is an electronic device and should not be disposed of as unsorted domestic waste. It is important to contact local authorities to inquire about the appropriate disposal methods for this product. Help contribute to environmental sustainability by ensuring the proper disposal or recycling of the EVIPOWER Smart EV Charger by EVIQO.

©2023 EVIQO TECHNOLOGIES LIMITED. All rights reserved. This material is protected by copyright laws in the United States and other countries. It may not be modified, reproduced, or distributed without the prior express written consent of EVIQO TECHNOLOGIES LIMITED. The trademarks and service marks "EVIQO" and "EVIPOWER" are registered trademarks of EVIQO TECHNOLOGIES LIMITED in the United States and other countries and cannot be used without the prior written

TABLE OF CONTENTS

1. IMPORTANT SAFETY INSTRUCTIONS 3
2. PRODUCT INTRODUCTION AND DATA SHEET 5
3. VERIFY CONTENTS 8
4. GATHER TOOLS 10
5. PLAN THE INSTALLATION TYPE 11
6. WIRE THE CIRCUIT 13
7. PLAN THE MOUNTING LOCATION 14
8. MOUNTING 15
9. CONFIGURING YOUR DEVICE 18
10. LIGHT CODES 20
11. LIMITED WARRANTY 24
12. COMPLIANCE 27

1. Important Safety Instructions

PLEASE KEEP THESE INSTRUCTIONS SAFE

WARNING: This User Manual contains important instructions for your EVIQO Smart EV Charger. Remember to always follow simple precautions when using electronic products, including the following guidelines.

CAUTION: Please note that strictly following the information provided in this manual does not exempt the user from their responsibility to comply with all relevant codes and safety standards. This Installation Guide outlines the typical installation and mounting scenarios. If any situation arises where it is not feasible to carry out an installation according to the procedures specified in this document, please reach out to EVIQO TECHNOLOGIES LIMITED directly. Please note that EVIQO TECHNOLOGIES LIMITED cannot be held liable for any damages that may arise from custom installations not specified in this document or failure to comply with the recommendations provided in this Installation Guide.

1.1 Overall Warnings & Cautions

WARNING: To avoid fire, property damage, injury or death, carefully read and follow the instructions during installation, operation and maintenance. Install and operate only as instructed in this Installation Guide.

- **DO NOT** put fingers into the electric vehicle connector.
- **DO NOT** use this product if the flexible power cord or EV cable is frayed, insulation-broken, or any other signs of damage.
- **DO NOT** use this product if the enclosure or the EV connector is broken, cracked, open, or shows any other indication of defect or damage.
- **DO NOT** remove cover or attempt to open the enclosure - risk of electric shock.

WARNING: This device should be supervised when used around children.
WARNING: This device must be grounded. Failure to ground the charging station can lead to risk of electrocution or fire.
WARNING: To avoid a risk of fire or electric shock, do not use this device with an extension cord.
WARNING: The suitability of the use of flexible cord in accordance with CE code, part I, rule 4-012, is to be determined by the local inspection authority.
WARNING: To reduce the risk of fire, connect only to a dedicated circuit provided with branch circuit overcurrent protection in accordance with the CSA C22.1–15 Canadian Electrical Code, Part 1 (Canada) or NOM-001-SEDE Electrical installations (utility) (Mexico) or ANSI / NFPA 70 National Electrical Code (USA).

WARNING: This device should be supervised when used around children.

CAUTION: Please use the charger properly. Do not hit or press hard on the enclosure. If the case is damaged, please contact a professional technician.

CAUTION: Do not put heavy objects on the charger to avoid danger.

Circuit Breaker Options table				
Max Output Load (A)	16A	32A	40A	48A
Circuit Breaker Rating (A)	20A	40A	50A	60A

1.2 Installation Requirements

WARNING: For the installation of your EVIQO Smart EV Charger, it is recommended to only engage licensed electrician with proper qualification and sufficient installation experience to ensure compliance with both national and local building and electrical codes and standards as well as all applicable safety standards, codes, ordinances and any local safety regulations.
WARNING: Disconnect electrical power to install the charging station.
WARNING: Be sure to preview the user manual before installing the EVIQO™ Smart Charger.

- **CAUTION:** Ensure proper safety measures by using appropriate protection when connecting to the main power distribution cable.
- **CAUTION:** Install type B, C, or D circuit breakers that meet the rated current requirements at the input terminal for effective protection.
- **CAUTION:** The device shall be mounted at height between 600 mm and 1200 mm from ground.
- **CAUTION:** Please keep the charger in a clean area with low humidity. Not recommended to be installed in coastal environments with high humidity or high dust.

1.3 Daily Maintenance

- **CAUTION:** Avoid moisture or water in the charger. If there is water or moisture ingress in the charger, it is necessary to immediately power off to avoid immediate danger, and notify the professional technician to carry out maintenance before next use.
- **CAUTION:** Please use the charger properly. Do not hit or press hard on the enclosure. If it is damaged, please contact a professional technician.
- **CAUTION:** Ensure that the charging cable is positioned in the way where possibility of stepping on or tripping over it are excluded and a chance to cause damage or stress thereto are minimized as much as possible. Please do not close a garage door

on the charging cable or the connector.

- **CAUTION:** Avoid placing the charger near hot objects and at high temperature locations and away from dangerous substances such as flammable gases and corrosive materials. Do not install EVIQO Smart EV Charger near flammable, combustible or explosive materials.
- **CAUTION:** Do not put heavy objects on the charger to avoid danger.

2. Product Introduction and Data Sheet

IMPORTANT: Please make sure to read this Installation Guide before the installation. Make sure you understand how the device works and its basic interface. EVIQO Smart EV Charger must be installed by a licensed electrician.

2.1 Basic Interface

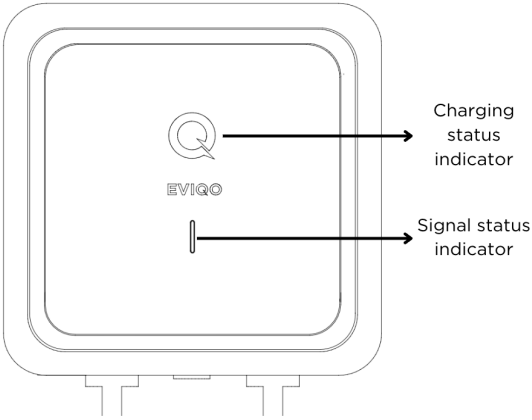

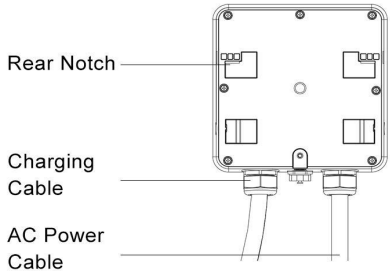

2.2 Basic Dimensions

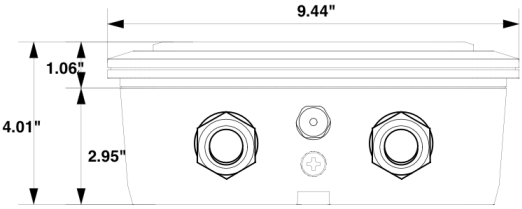

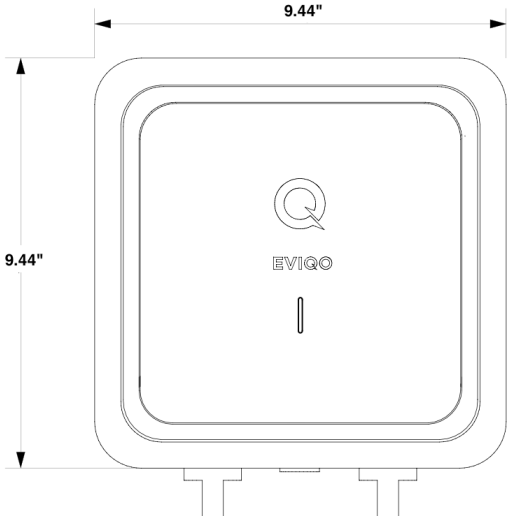

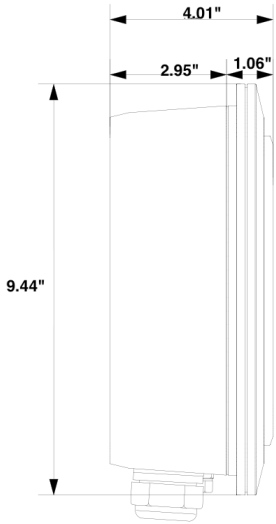

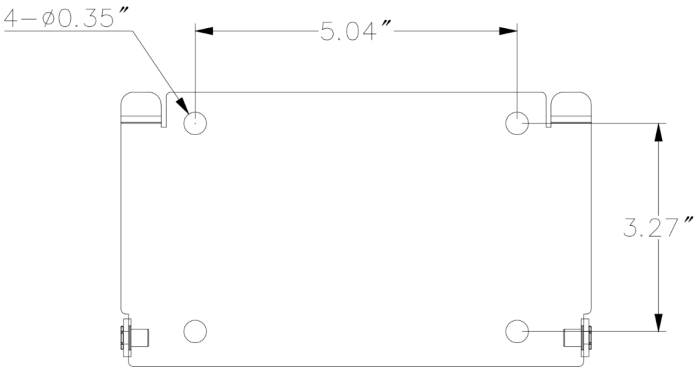

2.3 Specifications of EVIQO Smart EV Charger

Model Number	EVIPOWER
Rated Input Voltage	208-240 V AC
Rated Output Current	16/32/40/48A
Power Cable	39.4” cable with NEMA 14-50 plug
AC Power Frequency	60 Hz
Input Protection	UVP, OVP, RCD (CCID20), SPD, Ground Fault Protection
Output Protection	OCP, OTP, Control Pilot Fault Protection
Output Interface	SAE J1772 AC Charging Connector
Storage Temperature	-40°F to 158°F (-40°C to 70°C)
Operation Temperature	-22°F to 122°F (-30°C to 50°C)
Relative Operation Humidity	Up to 95% non-condensing
Relative Storage Humidity	Up to 95% non-condensing
Network Connection	Wi-Fi Version
Internet Function	10M / 100M Base-T
Wi-Fi Function	802.11 b/g/n
Cable Length	25ft Extra Long
Protection Level	Type 4
Installation Type	Wall-Mounted
Altitude	≤ 6561ft
Status Indication	Red, Green, Electric Blue LED

3. Verify Contents

Check the list to ensure you have this Installation Guide and all the parts listed below:

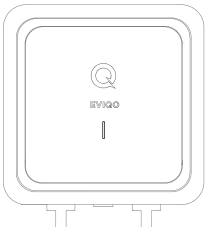

1

2

3

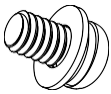

4

5

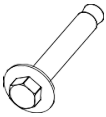

6

7

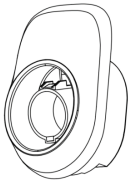

8

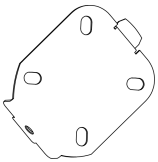

9

10

Note: If you are missing any of these parts, please contact EVIQO support.

No.	Product Name	Quantity	Description
1	EVIPOWER Smart EV Charger by EVIQO	1	With attached input power cable with NEMA 14-50 plug and output charging cable with J1772 connector
2	Installation Guide	1	Please read carefully before use
3	Wall-Mounted Bracket for EVIQO Smart EV Charger	1	For mounting the EVIQO Smart EV Charger to the wall. Comes already fixed to the EV charger out of the box.
4	M5 Anti-Theft Button Head Screws	4	For securing the EVIQO Smart EV Charger and the Holster to their Mounting Brackets. 2 screws already screwed to the Charger's Bracket by default. 1 piece is provided as a spare part for your convenience.
5	Mounting Template for the EV Charger	1	For easy drilling of 4 screw holes for the EVIQO Smart EV Charger wall-mounted bracket.
6	M6 Hexagonal Expansion Screws	9	For installing the Mounting Bracket of the EVIQO Smart EV Charger and the Mounting Bracket of the Holster. 1 piece is provided as a spare part for your convenience.
7	Allen Wrench	1	For tightening M5 Screws
8	Holster	1	Safely store the J1772 connector and output cable when they are not in use using the provided Holster. This ensures tidy connector and cable management and protects them from damage, maintaining their longevity and reliability.
9	Wall-Mounted Bracket for the Holster	1	For mounting the Holster to the wall
10	Mounting Template for the Holster	1	For easy drilling of 4 screw holes for the Holster bracket.

4. Gather Tools

For proper installation of the EVIQO Smart EV Charger and **depending on the type of installation - plugged-in or hardwired**, you need:
1) One NEMA 14-50 outlet (consult with the licensed electrician for the alternative type of the outlet if required) or supplies to install a hardwired dedicated circuit
2) Tape
3) Pencil
4) Stud finder
5) Level
6) Drill
7) Adjustable Ratchet Wrench

and depending on the type of installation you will also need:
8) Wire stripper
9) Voltmeter or digital multimeter (for measuring AC voltage at the installation site).

Note: The above tools are important, ensure to have them all for proper installation.

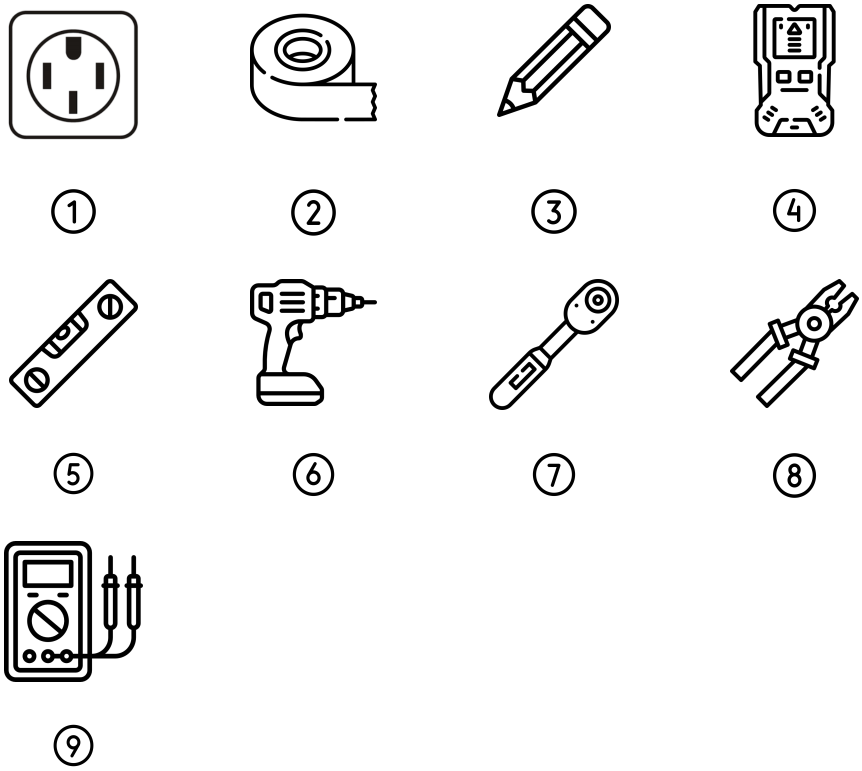

5. Plan the Installation Type

Choose the desired charging amperage first. EVIQO Smart EV Charger provides a maximum of 48A and offers installation options for various amperages. Consider factors such as available space or electrical capacity in the panel, desired charging speed, proper outlet availability and the homeowner's preference for hardwired or plug-in installation.

ATTENTION: EVIQO Smart EV Charger is pre-set for the default 40 Amps out of the box which is the maximum amperage possible for NEMA 14-50 plug it is supplied with. To get the maximum of 48 Amps, hardwire installation is required.

By default, EVIQO Smart EV Charger is equipped with NEMA 14-50 input power plug and is pre-set for 40 Amps of Max Output Load (Number 2 on the Amperage Dial Switch located inside the device). Depending on the preferences, the device can be plugged-in or hardwired.

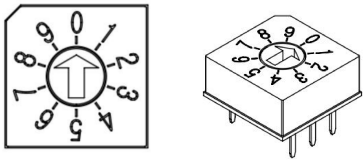

Amperage Dial Switch

If hardwired installation is chosen and the user wishes to increase the Max Output Load to 48 Amps (which requires 60 Amps Dedicated Circuit) - please switch to “3” on the Amperage Dial Switch.

To decrease the default Max Output Load of EVIQO Smart EV Charger to 32 Amps or 16 Amps - choose “1” or “0” on the Amperage Dial Switch, respectively.

Follow all applicable codes and ordinances and pull a permit for completing the electrical work as required. Please consult with the licensed electrician in case you have any questions.

CAUTION: EVIQO Smart EV Charger is a continuous load device, requiring the dedicated circuit to be rated at 125% of the maximum load for proper operation and safety.

Dedicated Circuit Rating	Max Output Load	Corresponding Value of Max Output Load on the Amperage Dial Switch of the device	Plug-In	Hardwire
60 A	48 A	3	No	Yes
50 A	40 A	2	Yes	Yes
40 A	32 A	1	Yes	Yes
30 A	24 A		No	Yes
20 A	16 A	0	No	Yes

CAUTION: In Canada, a plug-in installation is permitted exclusively with a 50 A dedicated circuit, according to the regulatory requirements.

6. Wire the Circuit

ELECTRIC SHOCK HAZARD: Prior to installation, switch off the circuit breaker at the panel supplying power to the 240V outlet. Do not restore power until the installation is fully completed. Failure to adhere to these instructions may result in the risk of electric shock or electrocution.

Once a plug-in or hardwired circuit installation has been chosen:

- For a 40 or 50 amp plug-in installation, wire the circuit with the appropriate 14-50 outlet. Install the outlet with the ground prong facing up.
- For a hardwired installation, please remove the original input power cable with NEMA 14-50 plug first. Connect the L1 lead to the grid L1, connect the L2 lead to the grid L2, connect the PE lead to the grid PE. Return the original input power cable to the box. Attach the label indicating the appropriate rating to the circuit panel.

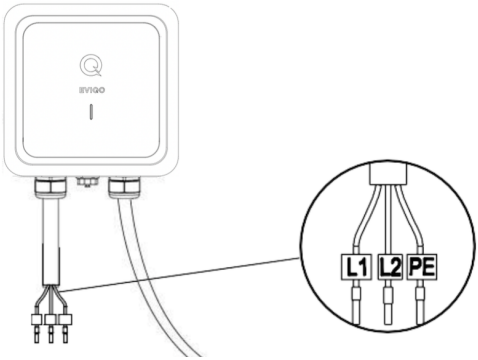

WARNING: This device must be grounded. Disconnect electrical power prior to installing the charging station.

WARNING: Improper connection of the equipment-grounding conductor would result in a risk of electric shock. Check with a qualified electrician or serviceman if you are not sure whether the product is properly grounded. Do not modify the plug provided with the product – if it doesn't fit the outlet, have a proper outlet installed by a qualified electrician.

7. Plan The Mounting Location

WARNING: In regions prone to frequent thunderstorms, it is recommended to install surge protection at the service panel for all circuits. Additionally, ensure that all power and ground connections, especially those at the breaker and bus bar, are clean and securely tightened.

CAUTION: Not recommended to be installed in coastal environments with high humidity or high dust.

CAUTION: For reliable performance, ensure the device is installed near the WiFi router to guarantee a strong signal and stable Internet access. Please plan the device's location accordingly, avoiding surfaces that may obstruct the WiFi signal.

Select the appropriate mounting location with electrical capacity sufficient for the EVIQO Smart EV Charger operation:

A. Please ensure you have chosen a mounting location which allows the charging cable to reach the car's charging port while still providing reasonable slack. The cable length is 25 ft (7.62 m).

B. If plug-in installation is chosen, please check the position of your NEMA 14-50 outlet and preferable place for mounting the EV charger before mounting the device or the holster. Please ensure you have chosen a mounting location which allows the input power cable with NEMA 14-50 plug to effectively reach the NEMA 14-50 outlet. Ensure the input power cable has a slight curve and is not stretched. The input power cable length is around 39.4" (1m) which gives sufficient flexibility in choosing the mounting location for the EV Charger. We recommend installing the EV Charger on a distance of around 27.6"-31.5" (70 cm - 80 cm) from the NEMA 14-50 outlet. To find your ideal mounting area for the EV charger, connect the charging station's input power cable to the outlet.

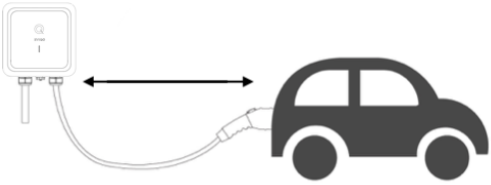

ELECTRIC SHOCK HAZARD: If the status light indicators turn on when the EV charger is plugged in, the circuit is not off. **STOP IMMEDIATELY.** Unplug EVIPOWER charger and switch off the power to the outlet at the circuit breaker until the installation is complete.

C. Please make sure the ground in your NEMA 14-50 outlet is placed on the top to match with the plug of the input power cable which has the ground prong facing up.

D. If you decide to install the EVIQO Smart EV Charger outdoors, this requires using an outdoor-rated, weather-resistant NEMA 14-50 outlet or hardwired installation.

E. Please ensure the holster bracket is mounted at approxamately the same level as the EV Charger bracket. It is recommended to keep a comfortable distance between the EVIQO Smart EV Charger and the holster which would allow to properly store the loops of the 25ft cable using the holster.

F. Both the device and holster must be securely anchored to a mounting surface, such as a stud of sufficient size or a solid wall, to ensure proper installation of the EV charger.

G. It is recommended to mount the device at a height between 4 feet (122 cm) and 5 feet (152 cm) from the ground. Still, the mounting location is significantly dependent on the outlet location, provided the plug-in installation was chosen.

H. Please note that the EV Charger comes with the mounting bracket pre-attached out of the box. After selecting the preferred mounting location, use the Allen Wrench provided in the box to remove the bracket from the EV Charger for further mounting.

8. Mounting

STEP 1

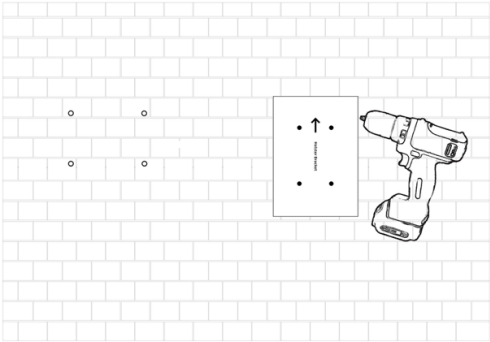

After selecting the desired mounting location for the EV Charger, proceed to drill a total of 8 screw holes (4 for the EVIQO Smart EV Charger and 4 for the Holster). Use the provided Wall Mount Templates in the box, one for the EV Charger and one for the Holster. Drill the holes with a diameter of around 0.31" (8 mm) and a depth of 2.05" (5.2 cm) using Φ8 (8 mm diameter) drill. When drilling the screw holes, please take note that both templates have arrows indicating the top side for proper alignment.

STEP 2

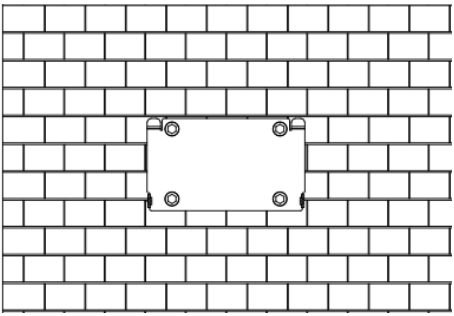

Use the set of 4 Hexagonal Expansion Screws provided in the box, along with the adjustable ratchet wrench, to securely fasten the wall-mounted bracket for the EVIQO Smart EV Charger onto the wall.

STEP 3

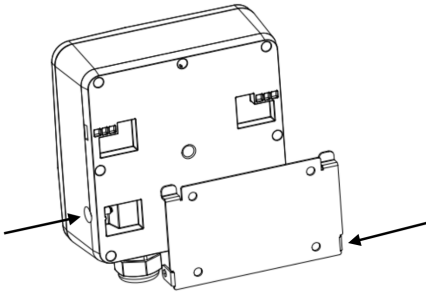

Align the rear notches of the EVIQO Smart EV Charger with the wall-mounted bracket. Insert the Anti-Theft Countersunk Head Screws through the screw holes on the right and left sides of the bracket. Then, use the Allen Wrench provided in the box to securely fasten the EVIQO Smart EV Charger to the wall-mounted bracket.

STEP 4

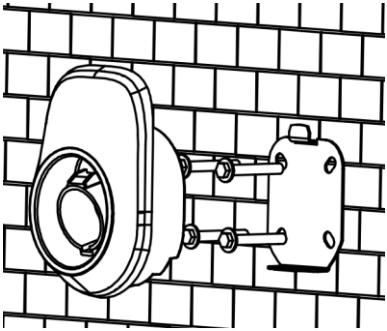

Use the set of 4 Hexagonal Expansion Screws provided in the box, along with the adjustable ratchet wrench, to securely fasten the wall-mounted bracket for the Holster onto the wall.

STEP 5

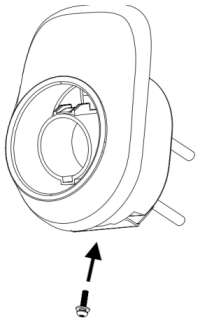

Align the rear notches of the Holster with the wall-mounted bracket. Insert the Anti-Theft Countersunk Head Screw through the screw hole on the bottom side of the bracket. Then, use the Allen Wrench provided in the box to securely fasten the Holster to the wall-mounted bracket.

Final Preparation

Once the installation is finished:

1. To ensure proper cable management, extend the cable to its full length, allowing any kinks or tension to be released. Afterwards, securely store the cable using the holster for neat and organized storage.

2. Restore power to the circuit at the electrical panel by switching on the corresponding breaker, and then plug the charging station back into the outlet to start charging.

3. After plugging in the EVIQO Smart EV Charger following the installation, the charging status Q-indicator will illuminate green, indicating it is ready to charge. The smaller status indicator below will start blinking electric blue, indicating it has entered into a configuration mode. This indicates that the device is prepared for configuration and charging.

4. Please remember to return this Installation Guide and all packaging materials to the homeowner. Additionally, kindly inform the homeowner that the charging station is now ready for configuration through the EVIQO mobile application.

9. Configuring Your Device

ATTENTION: After mounting the EVIQO Smart EV Charger, it is crucial to configure it in order to take full advantage of its wide variety of smart functions.

ATTENTION: Upon powering up, the EV Charger enters a 15-minute configuration mode if not yet configured. Failure to configure the device within this timeframe will result in IDLE mode. If you miss the 15-minute configuration window, simply unplug the device and power it back on. After 20 consecutive skips, the device will enter a constant IDLE mode on the 21st power-up. To re-enter configuration mode, perform a full reset by unscrewing the face part of the EV Charger and pressing the RESET button located internally. This will clear the device's configuration.

Note: To download the EVIQO mobile app, please use the QR codes.

Download on the App Store

GET IT ON Google Play

Once the EVIQO mobile app is downloaded, please follow the steps in EVIQO APP GUIDE:

Main smart features to note

1. Please note that EVIQO Smart EV Charger is equipped with the input power cable with NEMA 14-50 plug and is ready to supply the default 40 Amps right after it's plugged in.

2. The device is set to the default 'Plug and Charge' mode, enabling seamless charging without any prior configuration. Simply plug in the connector, and the charging process will automatically initiate, providing a hassle-free charging experience.

3. To maximize your savings and enhance the efficiency of your charging experience, configure your charging station by setting your Electricity Plans, allowing you to track the estimated costs of your charging sessions and take advantage of the most affordable rates available.

4. Additionally, activate the "Schedules" feature to automate your charging sessions, ensuring that your electric vehicle charges at the most cost-effective times. By utilizing this smart function, you can effectively manage your charging costs and enjoy a more convenient and economical charging experience. The app will help you to copy the chosen periods of Electricity Plans to the Schedules in order to automatically charge during the periods with the most affordable electricity tariffs.

5. If you require a one-time scheduled start for your charging session, along with the pre-set amperage, take advantage of the 'Delayed Start' function. This feature allows you to conveniently set a specific start time for your charging session, ensuring it begins at the desired time with the pre-configured amperage.

6. Please note that the 'Plug and Charge' function is mutually exclusive with the 'Schedules' and 'Delayed Start' features. If you have enabled the 'Plug and Charge' mode, the charging session will start automatically upon plugging in and without pressing START, any scheduling or delayed start configurations. To utilize the 'Schedules' or 'Delayed Start' functions, disable the 'Plug and Charge' mode.

7. Effortlessly track the duration, power consumption, and estimated costs of your charging sessions with a single click, utilizing weekly or monthly breakdowns, charts, and daily statistics to gain insights into your charging habits and effectively manage costs.

8. The EVIQO app offers a multitude of helpful tips to enhance your charging experience. For instance, when you set up your Electricity Plans within the app, it provides assistance by suggesting the copying of corresponding time periods to your Schedules. This ensures that you take full advantage of the more affordable tariffs during those specific periods. Likewise, when configuring your Schedules, the app reminds of your Electricity Plans and can automatically pre-fill the scheduled period using the time you have set in your Plans. This feature simplifies the scheduling process and helps you optimize your charging sessions.

9. The EVIQO app offers valuable features to enhance your charging experience. It sends reminders to plug in before scheduled sessions, provides push notifications with session stats upon completion, and prevents conflicting schedules that overlap. With these capabilities, you can stay on top of your charging routine, receive important charging updates, and ensure smooth and efficient scheduling without any conflicts.

10. Light Codes

10.1 Charging Status Indicator

Please Plug In (Ready to start)	Plugged In (waiting to start charging, communicating with the vehicle)	Charging	Charging Finished	Fault
Solid Green	Slow Blinking Green	Slow Blinking Electric Blue	Solid Electric Blue	Blinking Red

10.2 Signal Status Indicator

Connected to the cloud, waiting to plug in	Configuration mode	Connecting to the Internet	No Connection
Solid Electric Blue	Blinking Electric Blue	Slow Blinking Green	Solid Red

10.3 Errors and Warning Messages

Name of the error	Red LED indication	Definition of the error	Ways to fix the error
Voltmeter Fault	Flashing red 1 time	Meter fault	a) Unplug the connector and reboot the charger. b) If the fault persists, contact EVIQO technical support.
Control Pilot Fault	Flashing red 2 times 3 seconds interval	Charging guide abnormal	a) Unplug the connector and reboot the charger. b) Make sure the CP (Control Pilot) line is fixed in the right place. c) Check if the CP line in the connector runs an electrical short-circuit or open circuit. d) The device will recover automatically when the problem is solved. Reconnect the charger to the EV car for further normal use.
Undervoltage Protection	Flashing red 3 times 3 seconds interval	UVP (Under Voltage Protection) Fault. UVP Fault is triggered when the input voltage is below 90% (208V*0.9=187V) of rated voltage.	a) Unplug the connector. b) The device will recover automatically when the input voltage stabilizes within the required range.
Overvoltage Protection	Flashing red 4 times 3 seconds interval	OVP (Over Voltage Protection) Fault. OVP Fault is triggered when the input voltage is over 110% (240V*1.1=264V) of rated voltage.	a) Unplug the connector. b) The device will recover automatically when the input voltage stabilizes within the required range.
Overheat Protection Activated	Flashing red 5 times 3 seconds interval	OTP (Over Temperature Protection) Fault. OTP Fault is triggered when the temperature of the charger interior is	a) Unplug the connector. b) The device will recover automatically when the temperature turns lower than 185°F (85°C). c) If the problem persists, turn off

		over 185°F (85°C).	the power and carefully check if the thermistor on the PCB works.
Overcurrent Protection	Flashing red 6 times 3 seconds interval	OCP (Overcurrent Protection) Fault. OCP Fault is triggered when the current is over 110% of rated current set. For example for 48A set on the EV Charger ,OCP is 48A*1.1=53A. The value of the overcurrent shall be calculated based on the rated current set through the Amperage Dial Switch inside the EV charger, e.g. if the current Amperage Dial Switch is set for 2, the rated current will be 40A, then the OCP is 110%*40A=44A. For more information about the Amperage Dial Switch - go to page 11-12 of this Guide.	a) Unplug the connector. b) The device will recover automatically when the current goes down to a normal range. Reconnect the charger to the EV car for further normal use.
Ground Wire Disconnected	Flashing red 7 times 3 seconds interval	Ground wire not connected	a) Unplug the connector. b) Please contact an electrician to make sure the PE (Protective Earthing) line is properly connected. c) In case the device is hardwired, please make sure the input Live line and Neutral line (L1 and L2 lines) are not inversely connected. d) The device will recover automatically when it comes to normal. If this fault occurs during charging, remove the connector after the ground line is properly connected.
Relay Fault	Flashing red 8 times 3 seconds interval	Relay failure during charging	a) Unplug the connector and reboot the charger if the problem persists after the unplugging.

			b) Avoid prolonged simulator or loading machine usage. c) Consult a professional to check for electrical short-circuits and ensure dry J1772 connector. d) Test the relay module with a multimeter while the EV charger is on. Use the AC voltage gear to measure L1_IN and L1_OUT or L2_IN and L2_OUT. If the voltage is between 208V~240V, the relay is disconnected; if the measured value is 0V, the relay is closed. Contact technical support if there are any inconsistencies.
Leakage Protection Activated	Flashing red 9 times 3 seconds interval	RCD (Residual Current Device) Abnormal Fault. RCD Fault is triggered when current leaks at a range of 15-20mA.	a) Unplug the connector and reboot the charger. b) If the fault persists, contact a licensed electrician.
RCD Self-Test Fault	Flashing red 10 times 3 seconds interval	When the EV Charger is powered on, it will self-detect whether the leakage detection mechanism is effective.	a) Reboot the charger. b) Please contact a licensed electrician to fix the hardware issue.

11. Limited Warranty

Limited Warranty for EVIPOWER Smart EV Charger by EVIQO.

This Limited Warranty (“Warranty”) is applicable to the original purchaser of a new EVIPOWER Smart EV Charger by EVIQO ("EV Charger") for residential use in the USA and Canada. The Warranty is non-transferable and exclusively valid for the purchaser.

LIMITED 2+1 YEAR PARTS EXCHANGE WARRANTY: EVIQO TECHNOLOGIES LIMITED (“EVIQO”) provides a warranty for a period of two (2) + one (1) year[1] from the original purchase date (the “Warranty Period”), covering defects in materials or workmanship of your EV Charger, subject to the exclusions from Warranty coverage set forth below, provided the EV Charger was used under normal operating conditions and all the recommendations contained in the Installation Guide and EVIQO’s website were followed by the user. During the Warranty Period, EVIQO will repair or replace, at its discretion, any defective EV Charger upon the original purchaser’s written notice of the defect duly received during the Warranty Period. The Warranty includes parts and factory labor required for repairing the EV Charger, but excludes any on-site labor costs associated with uninstallation or reinstallation of the repaired or replaced EV Charger. It is your responsibility to ensure the correct uninstalling of any defective unit and installing the repaired or replacement EV Charger that is returned to you. Additionally, the cost associated with shipping the EV Charger to the designated address for repair or replacement is not included in the Warranty. Please note the exclusions from Warranty as specified below. You hereby understand and accept that EVIQO may provide remanufactured or reconditioned parts or refurbished or repaired charging stations as replacements under the Warranty. Any replaced parts, whether covered by warranty or not, are owned by EVIQO. Any replacement parts or charging stations provided will be covered for the remaining duration of the original Warranty Period. In cases where the EV Charger is determined by EVIQO to be out-of-warranty or ineligible for warranty service, it will be returned to you. However, if you approve, EVIQO can provide repair or replacement services at their standard charges, which will be at your expense.

Limitation of Liability

EVIQO does not authorize any agent to modify or exceed the warranty obligations of EVIQO. The remedies provided in this limited product warranty are the sole and exclusive remedies available to you. EVIQO does not provide any other express or implied warranties, except for the warranty stated above. All other warranties are excluded to the maximum extent permitted by law. If any implied warranty cannot be disclaimed under

[1]Contact the EVIQO support team for more details on how to extend the Limited Warranty and obtain a total of three (3) years of coverage.

applicable law, such warranty shall be limited in duration to the warranty period described above. No warranties apply after the expiration of the warranty period.

Exclusions from Limited Warranty

ATTENTION: Please note that the Warranty on your EV Charger shall not apply to defects or service repairs resulting from the causes listed below:

1. Improper installation, improper site preparation or choosing incorrect location for the installation, improper use and/or maintenance of the EV Charger,
2. Unauthorized modifications, disassembling or alterations made to the EV Charger.
3. Damage caused by accidents, misuse, abuse, vandalism, negligence or using the EV Chargers in a way other than as specified in the applicable documentation (including but not limited to physical damage from being struck by a vehicle).
4. Failure to follow the operating instructions, maintenance or storage guidelines provided.
5. Power surges, electrical faults, extreme electromagnetic field or fluctuations in voltage.
6. Environmental factors such as extreme temperatures, humidity, floods or exposure to corrosive substances.
7. Repairs or modifications performed by unauthorized personnel.
8. Normal wear and tear, normal aging changes or cosmetic damage such as scratches and dents.
9. Any damage or defects not directly attributable to manufacturing or workmanship issues.
10. Any damage caused by using any third-party unauthorized software, interface, parts, or supplies not supplied and/or approved by EVIQO TECHNOLOGIES in advance in writing.

ATTENTION: The Warranty will not be applicable if the original identification markings, including but not limited to serial numbers, trademarks, safety warnings, or other markings on the EV Charger enclosure, are damaged, altered, or removed, or if the charging station is used or installed for purposes other than in a single-family residence.

ATTENTION: Please note EVIQO does not provide any Warranty for the error-free operation or uninterrupted functionality of any of its services.

Step-by-step instruction to obtain the Warranty service:

1. Contact Customer Service at +1 504 384 7667 (504-EVIQOUS) or support@eviqo.io to request a Return Material Authorization (“RMA”) number from EVIQO, if at any point during the Warranty period you believe you have a defective EV Charger.

2. Please provide:
    - a detailed description of the issue you are experiencing with the EV Charger for effective troubleshooting,
    - the model number and serial number of your EV Charger,
    - proof of purchase,
    - shipping information,
    - any other relevant details that will assist EVIQO in addressing your request accurately and efficiently.

3. If, upon reviewing your request, it is determined by EVIQO that the defect appears to be covered by your valid Warranty, and your Warranty is still in effect, EVIQO will issue you an RMA number and provide you with the address to return the defective EV Charger.

4. Ship the defective EV Charger to the provided address, ensuring it is packaged in the original shipping box provided or a suitable container to prevent damage. Please ensure to include the RMA reference number in the shipping documentation when returning the defective EV Charger. If your EV Charger is covered by the Warranty, EVIQO will repair or replace it free of charge and cover the shipping expenses for sending it back to you.

12. Compliance

This device complies with part 15 of the FCC Rules.
Operation is subject to the following two conditions:

1. This device may not cause harmful interference.

2. This device must accept any interference received, including interference that may cause undesired operation.

FCC ID: 2BBXG-EVIPOWER
WIFI module:
Contains FCC ID:2AC7Z-ESPWROOM32D

NOTE: This equipment has been tested and found to comply with the limits for a Class B digital device, pursuant to part 15 of the FCC Rules. These limits are designed to provide reasonable protection against harmful interference in a residential installation.

This equipment generates uses and can radiate radio frequency energy and, if not installed and used in accordance with the instructions, may cause harmful interference to radio communications. However, there is no guarantee that interference will not occur in a particular installation. If this equipment does cause harmful interference to radio or television reception, which can be determined by turning the equipment off and on, the user is encouraged to try to correct the interference by one or more of the following measures:

- Reorient or relocate the receiving antenna.
- Increase the separation between the equipment and receiver.
- Connect the equipment into an outlet on a circuit different from that to which the receiver is connected.
- Consult the dealer or an experienced radio/TV technician for help

NOTE: The manufacturer bears no responsibility for any radio or TV interference caused by unauthorized modifications to this equipment. It is important to note that such modifications have the potential to invalidate the user's authority to operate the equipment.

This equipment is designed to comply with the FCC's radiation exposure limits for uncontrolled environments. For safe operation, it should be installed and used with a minimum distance of 20 cm between the radiator and your body. To ensure proper functioning, it is important to avoid placing this transmitter in proximity to any other antenna or transmitter.

EVIPOWER

your home SUPERPOWER

iOS APP

Android APP

EVIQO APP GUIDE