EVIQO

EVIPOWER™ by EVIQO™

EVIPOWER - your home superpower.

Installation Guide

Electric Vehicle Smart Charger

ATTENTION:
Installers, please read this guide thoroughly.

WARMEST GREETINGS TO OUR FELLOW EV ENTHUSIASTS!

YOUR JOURNEY TO FAST HOME CHARGING STARTS HERE!

EVIQO was founded by fellow EV owners just like you, who understand the everyday challenges you face.

As a user-centric brand, we're dedicated to crafting the ideal charging lifestyle for EV enthusiasts!

Before we start...

keep in mind that EVIQO tech support team is here to ensure your experience is as smooth as possible!

Whether it's

- setting up your EVIPOWER,
- adjusting app settings, or
- simply having a chat,

we're waiting for your call!

If you find anything unclear, don't hesitate —

just reach out and we'll guide you.

support@eviqo.io

(650) 457-0099 (USA)

(587) 330-0586 (Canada)

After installation, return here to browse through the Frequently Asked Questions, conveniently located at the beginning for your easy access:

1. **How to pair my EVIPOWER with the EVIQO app?**

Once you power up the EV charger, the 15-minute configuration window starts and a small vertical line indicator must be flashing blue. If the 15-minute configuration window expired, restart the configuration window for pairing your smartphone with the charger:

1. Restart the device (power off and back on) to restart the configuration window.
2. Ensure the signal indicator (small vertical line) is flashing blue, indicating the configuration mode.
3. Keep your phone close to EVIPOWER; it might take a minute to detect.
4. Don't forget to grant the EVIQO app Bluetooth permissions.

2. **My EVIPOWER cannot connect to the Internet. What shall I do?**

Please restart your wifi router. It’s also recommended to restart EVIPOWER (power cycle, turn off and back on).

3. My car's app already has smart features. Is it necessary to also use the EVIQO smart app?

EVIQO encourages utilizing the charger's smart features. For optimal performance, ensure harmony between the smart functions: if you intend to utilize your car's smart features, refrain from duplicating settings in your car app to maintain seamless communication with EVIPOWER.

4. EVIPOWER isn’t responding. Seems like the app is frozen.

Performing a hard reboot (reset to factory settings) is necessary. Locate the reset button on the right side of the charger’s enclosure by following these steps:

1. Press and hold the button for 15 seconds. The light indicators will turn solid red for 3 seconds before the device shuts down, restarts, and restores to factory settings. You will hear a beep sound. Please wait 1 min for the unit to reset.
2. After the reboot, the signal indicator (small vertical line) must go flashing blue - configuration mode. You will need to reconfigure the device and pair it again with the EVIQO app.
3. Your phone must be very close to the EV charger, please allow the EVIQO app 10-60 seconds to find a new device. Once done, follow the next steps in the app.

5. How to set the Schedules properly? I've got the "Conflict of Schedules" notification.

To ensure proper functioning of the schedules, please adhere to the following requirements:

Time Splitting: Ensure the Start and Stop times fall within the same calendar day (24-hour period). For example, if you intend to set a schedule from 9:00 PM to 6:00 AM, create two separate schedules: Schedule 1 from 9:00 PM to 11:59 PM and Schedule 2 from 12:00 AM to 6:00 AM. Schedule 2 will start automatically after Schedule 1 finishes at 11:59 PM.

Avoid Overlaps: Regardless of the Schedule switcher (on/off), ensure there are no time overlaps with other schedules or Delayed Start.

Days Conflict: If you have the same days chosen in multiple schedules with no specific start/stop times set, it creates a conflict. For example, if Schedule 1 and Schedule 2 both have Monday selected but no specific start/stop times set, it's a schedule conflict.

Delayed Start: Make sure schedules don't overlap with the Delayed Start feature.

Complete Fields: A schedule is valid and can be switched on only if days, start, and stop times are chosen. Please fill in all the required fields.

Conflicting values will not be saved: If you attempt to set a schedule that overlaps with an existing one, your changes will not be saved. To set the new schedule, you'll need to clear the days, start, and stop times of the existing schedule that would otherwise overlap with it. Don't forget to press "Done" to save the changes.

6. **I set the Schedule but it didn't start when it was supposed to. Why?**

Check Wifi connection. Please also check the time zone in the EVIQO app. The charger picks the time zone based on the IP address of the wifi router it's connected to. Press "..." in the top right corner of the main page. Then scroll down and choose the correct time zone.

7. **What is the Delayed Start function, and how does it differ from the Schedule?**

Delayed Start is a one-time start time reservation. Once the start time is reached, the Delayed Start feature automatically turns off. If you prefer a standardized charging routine to benefit from regular off-peak rates, use the Schedules feature. Please avoid setting a Delayed Start that conflicts with the existing Schedules.

8. How do I track my estimated costs?

To monitor your estimated costs effectively, set your electricity rates:
1. Tap the "..." icon located in the top right corner of the main page.
2. Choose the Settings menu and select the Electricity Plans.
3. Establish your basic plan and any additional Plans (you can rename them).

9. What is a dip switch and where is it located?

Dip switch is a hardware maximum current output limiter. By default the unit is set for 40A (number “2” on the dip switch) in the plug-in version and 48A (number “3”) for the hardwire version. You can adjust the default amperage to 16A or 32A (number “0” and “1” on the dip switch, respectively), subject to the circuit capacity and/or personal preferences. Follow these steps to access the dip switch:

1. Remove EVIPOWER from the wall bracket, by unscrewing the anti-theft screws on both sides of the device with the allen wrench provided in the box.
2. Remove the face part by unscrewing the 7 screws on the back side.
3. Locate the amperage dip switch on the motherboard located on the internal side of the face part of EVIPOWER, positioned to the left and up diagonally from the center of the motherboard. It’s light gray, small, and with a round shape.

10. I can set the amperage on the dip switch and in the EVIQO app. What's the difference?

Dip switch is a hardware maximum current output limiter. The current slider located on the main page of the EVIQO app is limited with the output set on the dip switch. The slider in the mobile app has 1A step.

11. My family members also use my EV. How to add a second user to the EVIQO app?

To add a new user, simply follow these steps:
1. Tap on the man icon in the top left corner of the main page.
2. Press Household -> Members -> Add member (located in the top right corner).
3. Choose the role for the new member, and tap the top right corner to confirm the invitation. The invited user will get an invitation email with instructions.

12. How to reset the unit?

See page 29. Locate the button on the right side of the charger’s enclosure:

1. For hard reboot to the factory settings: Press and hold the button for 15 seconds until you hear a beep sound.
2. For quick restart: Press the button for 5 seconds.

Disclaimer of Warranties and Limitation of Liabilities

All information, specifications and illustrations in this manual are based on the latest information available at the time of printing. EVIQO TECHNOLOGIES LIMITED reserves the right to make changes at any time without prior notice. While information of this manual has been carefully checked for accuracy, it does not represent any obligation on the part of the manufacturer. No guarantee is given for the completeness and correctness of the contents, including but not limited to the product specifications, functions, and illustrations. EVIQO TECHNOLOGIES LIMITED will not be liable for any direct, special, incidental, indirect damages or any economic consequential damages (including the loss of profits). It is the user's responsibility to comply with all relevant codes and safety standards. Any resulting damage due to disregard or actions contrary to the instructions in this Installation Guide is excluded from the product warranty.

The EVIPOWER Smart EV Charger by EVIQO is an electronic device and should not be disposed of as unsorted domestic waste. It is important to contact local authorities to inquire about the appropriate disposal methods for this product. Help contribute to environmental sustainability by ensuring the proper disposal or recycling of the EVIPOWER Smart EV Charger by EVIQO.

©2025 EVIQO TECHNOLOGIES LIMITED. All rights reserved. This material is protected by copyright laws in the United States and other countries. It may not be modified, reproduced, or distributed without the prior express written consent of EVIQO TECHNOLOGIES LIMITED. The trademarks and service marks "EVIQO" and "EVIPOWER" are registered trademarks of EVIQO TECHNOLOGIES LIMITED in the United States and other countries and cannot be used without the prior written consent of EVIQO TECHNOLOGIES LIMITED.

TABLE OF CONTENTS

1. IMPORTANT SAFETY INSTRUCTIONS 9
2. PRODUCT INTRODUCTION AND DATA SHEET 11
3. VERIFY CONTENTS 14
4. GATHER TOOLS 16
5. PLAN THE INSTALLATION TYPE BASED ON YOUR VERSION 17
6. WIRE THE CIRCUIT 19
7. PLAN THE MOUNTING LOCATION 20
8. MOUNTING 21
9. CONFIGURING YOUR DEVICE 24
10. LIGHT CODES 26
11. RESET AND HARD REBOOT BUTTON 29
12. Charging port open / release button (NACS) 30
12. LIMITED WARRANTY 30
13. COMPLIANCE 33

1. Important Safety Instructions

PLEASE KEEP THESE INSTRUCTIONS SAFE

WARNING: This Installation Guide contains important instructions for your EVIQO Smart EV Charger. Remember to always follow simple precautions when using electronic products, including the following guidelines.

CAUTION: Strict compliance with the information provided in this manual does not exempt the user from their responsibility to comply with all relevant codes and safety standards. This Installation Guide outlines the typical installation and mounting scenarios. If any situation arises where it is not feasible to carry out an installation according to the procedures specified in this document, please consult with a licensed installer. Please note that EVIQO TECHNOLOGIES LIMITED cannot be held liable for any damages that may arise from custom installations not specified in this document or failure to comply with the recommendations provided.

1.1 General Warnings & Cautions

- **WARNING:** To avoid fire, property damage, injury or death, carefully read and follow the instructions during installation, operation and maintenance. Install and operate only as instructed in this Installation Guide.
- **DO NOT** put fingers into the electric vehicle connector.
- **DO NOT** use this product if the input power cord or EV cable is frayed, has broken insulation, or any other signs of damage.
- **DO NOT** use this product if the enclosure or the EV connector is broken, cracked, open, or shows any other indication of defect or damage.
- **DO NOT** operate EVIQO Smart EV Charger in temperatures outside its operating range of -22°F to 131°F (-30°C to 55°C).
- **DO NOT** remove cover or attempt to open the enclosure in rain or other inclement weather - risk of electric shock.
- **DO NOT** open the front cover of your charger while it is connected to the power supply.
- **DO NOT** put heavy objects on the charger to avoid danger.
- **WARNING:** If removing the face cover of the device is required, avoid touching the L1 IN, L2 IN, PE IN, L1 OUT, L2 OUT, PE OUT connectors, connection terminals, ribbon cable terminals linking the front cover to the main motherboard, or any other internal components if the device is still turned on - risk of electric shock.
- **WARNING:** This device should be supervised when used around children.
- **WARNING:** This device must be grounded. Failure to ground the charging station can lead to risk of electrocution or fire.
- **WARNING:** To avoid a risk of fire or electric shock, do not use this device with an extension cord.
- **WARNING:** It's recommended to install this device in a sufficiently ventilated area and preferably avoid installing it in areas with extreme direct sunlight.
- **WARNING:** In case of flooding, do not operate EVIQO charger while it or your EV is submerged in water.
- **WARNING:** If EVIQO charger was submerged in water due to flooding, make sure a qualified electrician inspect it before energizing or using it again.

- **WARNING:** The suitability of the use of flexible cord in accordance with CE code, part I, rule 4-012, is to be determined by the local inspection authority.
- **WARNING:** To reduce the risk of fire, connect only to a dedicated circuit provided with branch circuit overcurrent protection in accordance with the CSA C22.1–15 Canadian Electrical Code, Part 1 (Canada) or NOM-001-SEDE Electrical installations (utility) (Mexico) or ANSI / NFPA 70 National Electrical Code (USA).

CAUTION: Please use the charger properly. Do not hit or press hard on the enclosure. If the case is damaged, please contact a professional technician.

1.2 Installation Requirements

WARNING: For the installation of your EVIQO Smart EV Charger (hardwired installation and/or NEMA 14-50 outlet installation), it is recommended to only engage licensed electrician with proper qualification and sufficient installation experience to ensure compliance with both national and local building and electrical codes and standards as well as all applicable safety standards, codes, ordinances and any local safety regulations. It's recommended to use a high quality circuit breaker and wiring (for hardwire installation) and/or NEMA 14-50 receptacle and wiring (plug-in installation).
WARNING: Disconnect electrical power to install the charging station.
WARNING: Be sure to preview this Installation Guide before installing the EVIQO Smart EV Charger.

WARNING: Your EVIQO charger must be grounded to ensure safety. Grounding provides a path of least resistance, reducing the risk of electric shock if the charger malfunctions. The plug-in version of the charger comes with a grounding conductor and plug, which must be connected to a properly installed and grounded NEMA 14-50 receptacle according to local codes. If you hardwire your EVIQO, please consult a licensed electrician to ensure proper grounding. If your device signals a Ground Fault, consult a licensed electrician to ensure proper grounding. Improperly connecting the equipment-grounding conductor can cause the risk of electric shock. If you're unsure if the product is properly grounded, consult a qualified electrician or service technician. Do not modify the provided plug. If it doesn't fit the receptacle, have a qualified electrician install the appropriate NEMA 14-50.

- **CAUTION:** Ensure proper safety measures by using appropriate protection when connecting to the main power distribution cable.
- **CAUTION:** Install type B, C, or D circuit breakers that meet the rated current requirements at the input terminal for effective protection.
- **CAUTION:** The device shall be mounted at height between 3ft and 5ft from ground.

1.3 Daily Maintenance

- **CAUTION:** Avoid moisture or water in the charger. If there is water or moisture ingress in the charger, it is necessary to immediately power off to avoid immediate danger, and notify the professional technician to carry out maintenance before next use.
- **CAUTION:** Your EVIQO charger contains no user-serviceable parts. Please do not

attempt to service or repair any part of the device yourself. For any servicing needs, please contact EVIQO customer service.

- **CAUTION:** Please use the charger properly. Do not hit or press hard on the enclosure. If it is damaged, please contact a professional technician or EVIQO TECHNOLOGIES.
- **CAUTION:** Take necessary precautions with electronic medical implants.
- **CAUTION:** Ensure that the charging cable is positioned in the way where possibility of stepping on or tripping over it are excluded and a chance to cause damage is minimized. Please do not close a garage door on the charging cable or the connector.
- **CAUTION:** Avoid placing the charger near hot objects and at high temperature locations and away from dangerous substances such as flammable gases and corrosive materials. Do not install EVIQO Smart EV Charger near flammable, combustible or explosive materials.
- **CAUTION:** Do not put heavy objects on the charger to avoid danger.
- **CAUTION:** Before cleaning your EVIQO charger, disconnect it from the power. Avoid using cleaning solvents; wipe it down with a clean, dry cloth to remove dust and dirt.

2. Product Introduction and Data Sheet

IMPORTANT: Make sure you understand how the device works and its basic interface. EVIQO Smart EV Charger must be installed by a licensed electrician.

2.1 Basic Interface

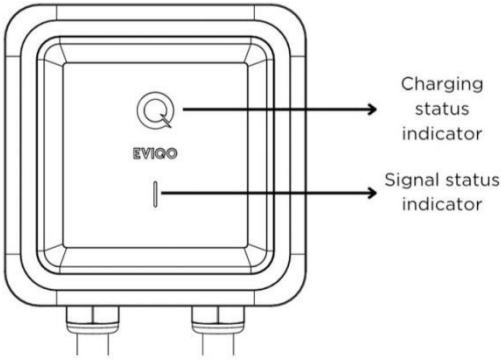

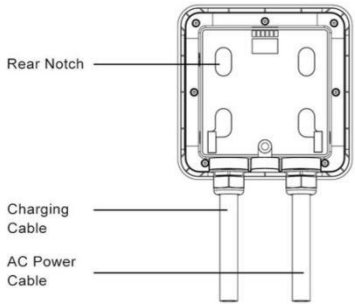

2.2 Basic Dimensions

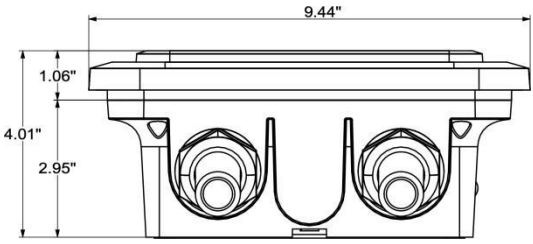

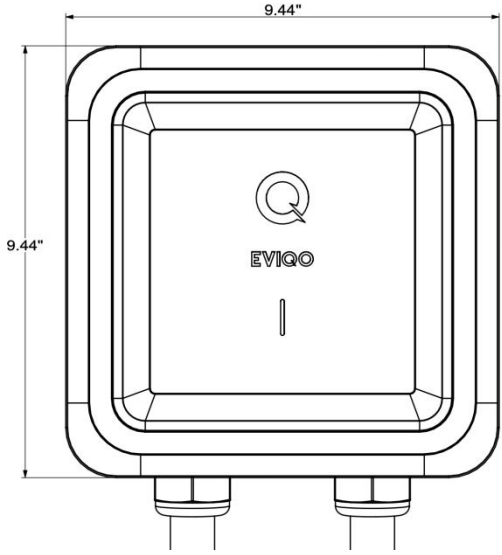

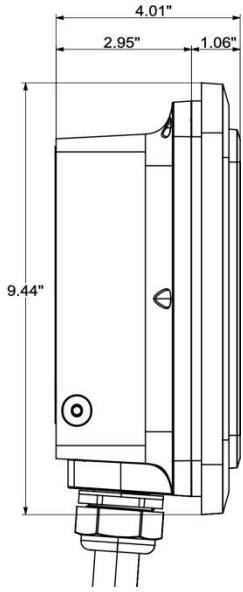

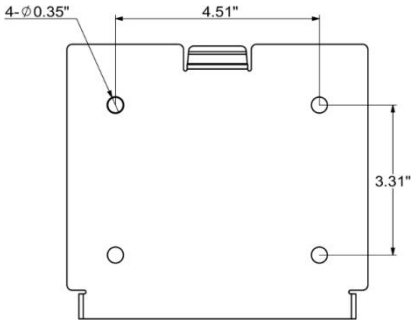

2.3 Specifications of EVIQO Smart EV Charger

Model Number	EVIPOWER248J — J1772 connector model (40A plug-in or 48A hardwire); EVIPOWER248N — J3400 connector model (40A plug-in or 48A hardwire).
Rated Input Voltage	208-240 V AC
Rated Output Current	16A / 32A / 40A (plug-in max) / 48A (hardwire max)
Power Cable	37” input cable with NEMA 14-50 plug or 39” THWN-2 6 AWG (for L1 and L2) and 10 AWG (for PE) for hardwire model
AC Power Frequency	60 Hz
Input Protection	UVP, OVP, RCD (CCID20), SPD, Ground Fault Protection
Output Protection	OCP, OTP, Control Pilot Fault Protection
Output Interface	SAE J1772 AC Charging Connector or SAE J3400 AC Charging Connector (NACS)
Storage Temperature	-40°F to 167°F (-40°C to 75°C)
Operation Temperature	-22°F to 131°F (-30°C to 50°C)
Relative Operation Humidity	Up to 95% non-condensing
Relative Storage Humidity	Up to 95% non-condensing
Network Connection	Wi-Fi Version
RF Specifications	315MHz
Internet Function	10M / 100M Base-T
Wi-Fi Function	802.11 b/g/n
Cable Length	25ft Extra Long (+/- 3%)
Protection Level	NEMA 4, IP 66
Installation Type	Wall-Mounted
Altitude	≤ 6561ft
Status Indication	Red, Green, Electric Blue LED

3. Verify Contents

Check the list to ensure you have this Installation Guide and all the parts listed below:

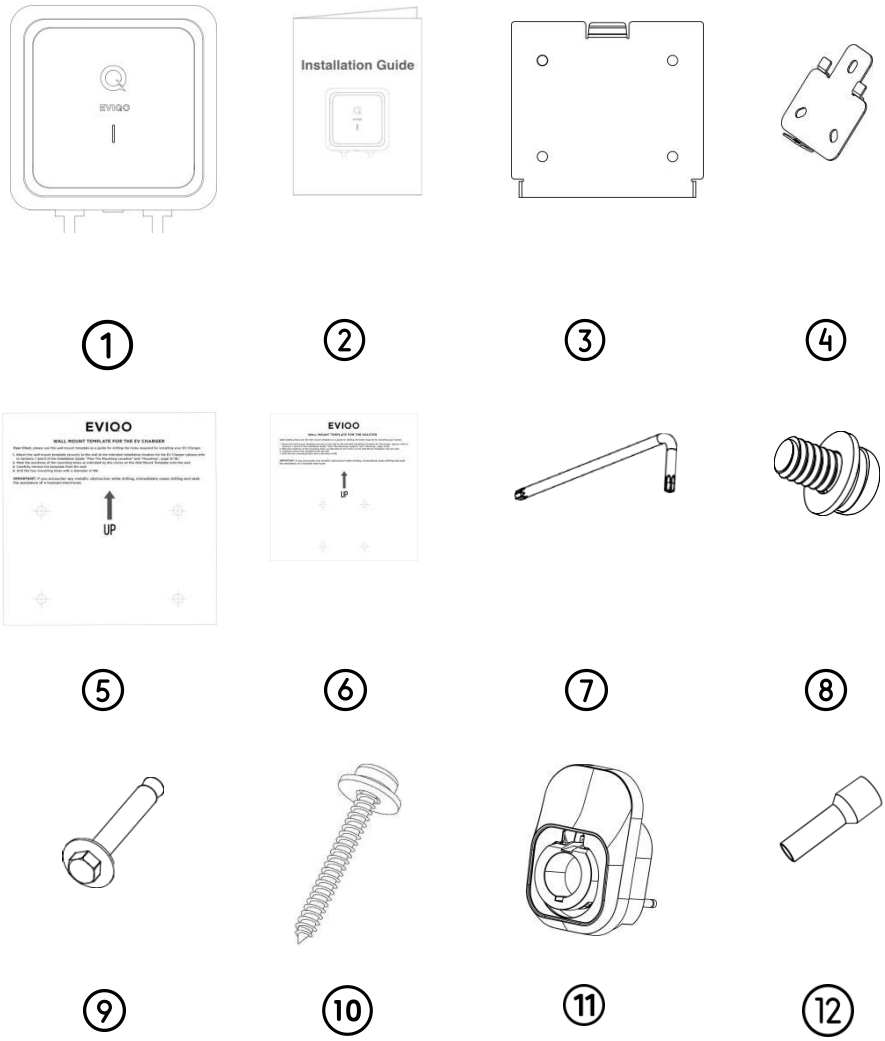

Note: If you are missing any of these parts, please contact support@eviqo.io

No.	Product Name	Quantity	Description
1	EVIPOWER Smart EV Charger by EVIQO	1	With attached input power cable (with NEMA 14-50 plug or 3-wire whip with a 3.2 ft conduit for hardwiring) and 25 ft output charging cable with J1772 or J3400 connector
2	Installation Guide	1	Please read carefully before use
3	Wall-Mounted Bracket for EVIQO Smart EV Charger	1	For mounting the EVIQO Smart EV Charger to the wall. Comes already fixed to the charging unit.
4	Wall-Mounted Bracket for the Holster	1	For mounting the Holster to the wall. Comes already fixed to the Holster out of the box.
5	Mounting Template for the EV Charger	1	For easy drilling of 4 screw holes in masonry, brick or concrete walls for the EVIQO Smart EV Charger wall-mounted bracket installation.
6	Mounting Template for the Holster	1	For easy drilling of 4 screw holes in masonry, brick or concrete walls for the Holster wall-mounted bracket installation.
7	Allen Wrench	1	For tightening Anti-Theft Button Head Screws on the sides of EVIQO Smart EV Charger.
8	Anti-Theft Button Head Screws	4	For securing the EVIQO EV Charger and the Holster to their Mounting Brackets. 2 screws already screwed to the Charger's Bracket by default and 1 to the Holster. 1 piece provided as a spare part for your convenience.
9	Hexagonal Expansion Bolts	8	For installing the Mounting Bracket of the EVIQO Smart EV Charger and the Mounting Bracket of the Holster to the masonry, concrete or brick walls. 1 piece is provided as a spare part for your convenience.
10	Phillips Pan Head Lag Screws with gaskets	8	For installing the Mounting Bracket of the EV Charger and the Mounting Bracket of the Holster to the wood studs or drywalls. 1 piece provided as a spare part for your convenience.
11	Holster	1	Safely store the J1772/J3400 connector and output cable when they are not in use using the provided Holster.
12	Pin Terminal Connectors - for 40A Plug-in only (in case you need to hardwire the 40A Plug-In version).	3	**x2 pin** connectors for L1/L2 IN, 8AWG (F±0.47",L±0.86",W±0.29", B±0.39", D±0.19",C±0.17"), **x1 pin** connector for PE IN, 10AWG (F±0.47",L±0.82", W±0.23", B±0.35", D±0.15",C±0.13").

4. Gather Tools

For comfortable installation of the EVIQO Smart EV Charger and **depending on the type of installation (plug-in or hardwire)**, you might need:
1) NEMA 14-50P 240V outlet or electrical materials for hardwire installation, depending on your specific case (consult with the licensed installer).
2) Tape (optional, will help to attach the Mounting Templates to the wall, if needed).
3) Pencil (optional, will help to mark the holes to drill, if needed).
4) Stud finder (optional, to properly locate the studs).
5) Level (optional, to properly install the brackets).
6) Drill (optional).
7) Adjustable Ratchet Wrench (optional, for proper expansion bolts fixation).
8) Wire stripper (optional, for hardwired installation of the plug-in version, if needed).
9) Voltmeter or digital multimeter (for measuring AC voltage at the installation site).
10) Screwdriver and/or torque screwdriver (optional, if you need to open the faceplate of the plug-in version for hardwire installation).

Note: The above tools are important, ensure to have them all for proper installation.

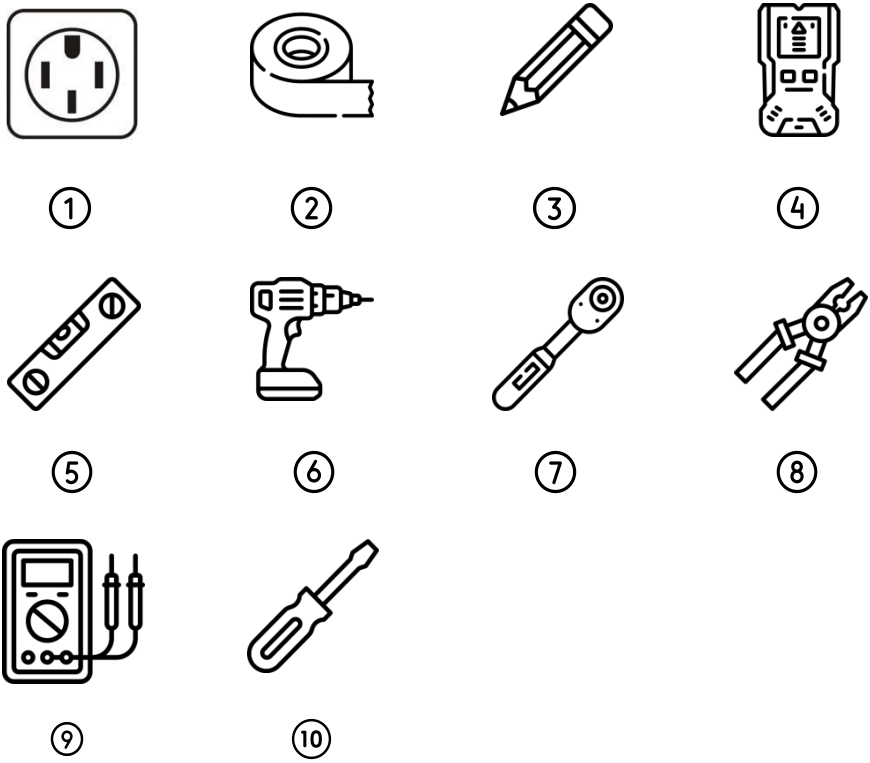

5. Plan the Installation Type Based on Your Version

Before installing your EVIQO charger, ensure you obtain all necessary permits and/or approvals according to applicable electrical codes, regulations and ordinances.

There are 2 versions of EVIQO Smart EV Chargers:
1) 40A (Max) plug-in version, and 2) 48A (Max) hardwire version.
NOTE: 40A plug-in version is capable of harwiring, custom whip is required.

Plug-in version is 40A max output. Hardwire version is 48A max output.
The amperage in both versions can be lowered to 16A or 32A using the hardware Amperage Dip Switch. Its location and operation is described on page 18. The EVIQO app also offers an amperage adjuster with 1A step, allowing you to precisely set any amperage value within the range set by the Dip Switch. When planning the desired amperage, consider factors such as available electrical panel capacity, desired charging speed, proper outlet availability, and whether you prefer a hardwired or plug-in installation.

ATTENTION: EVIQO plug-in version is pre-set for the default 40 Amps max output which is the maximum amperage allowed by the regulations for NEMA 14-50 plug-in EV chargers. To get 40 Amps out of a NEMA 14-50 outlet, a 50 Amp* dedicated circuit is required.

EVIQO hardwire version is pre-set for the default 48 Amps max output and requires a 60 Amps* dedicated circuit.

***CAUTION**: The National Electrical Code “80% rule” stipulates that electrical circuits should not be continuously loaded (three hours or more) to more than 80% of their maximum rated capacity.

EVIQO 40A plug-in version is equipped with NEMA 14-50 input power plug and is set for 40 Amps of max output load (Number “2” on the Amperage Dip Switch located inside the device) by default. If needed, the device can be hardwired too (hardwire custom whip is required - please consult the licensed electrician in case you have any questions). For the avoidance of doubt, even if the hardwired installation is chosen, 40A is the maximum output of the EVIQO 40A plug-in version. If the user switches the Amperage Dip Switch to any other value greater than “2” - the max output will still be 40A.

EVIQO 48A hardwire version is equipped with 3-wire whip, liquid tight connector and a 3.2ft nonmetallic liquid tight flexible electrical conduit of 3.1 ft for hardwiring. The Amperage Dip Switch is set for 48 Amps of max output load (Number “3” on the Amperage Dip Switch located inside the device) by default. If the user switches the Amperage Dip Switch to any other value greater than “3” - the max output will still be 48A.

The Amperage Dip Switch is a hardware amperage output limiter. It's located inside the device. To access it:

1) **Remove EVIQO EV Charger from the Wall Bracket:** Utilize the included allen wrench to unscrew the anti-theft screws positioned on both sides of the device.
2) **Power off the device.**
3) **Unscrew the face part**: Once the anti-theft screws are loosened, proceed to unscrew the seven screws located on the back of the device.
4) **Turn off the power supply.** Do not open the front cover of your charger while it is connected to the power supply.
5) **Detach the faceplate of the EVIQO EV Charger.**
6) **The Amperage Dip Switch is located on the internal side of the faceplate, positioned on the motherboard in the top left. It is small and gray in color.**

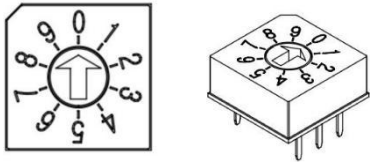

Amperage Dip Switch

To decrease the default Max Output Load of EVIQO Smart EV Charger to 32 Amps - choose "1" on the Amperage Dip Switch. For 16 Amps - choose "0", respectively.

Dedicated Circuit Rating	Max Output Load for EVIQO	Corresponding Value of the Amperage Dip Switch	Plug-In	Hardwire
60 A	48 A	3	No	Yes
50 A	40 A	2	Yes	Yes
40 A	32 A	1	Yes	Yes
30 A	24 A	set for "1" (32A) and decrease to 24A in the EVIQO app	No	Yes
20 A	16 A	0	No	Yes

CAUTION: In Canada, a plug-in installation is permitted exclusively with a 50 Amps dedicated circuit, according to the regulatory requirements.

6. Wire the Circuit

ELECTRIC SHOCK HAZARD: Prior to installation, turn off the circuit breaker at the panel supplying power to the circuit. Do not restore power until the installation is fully completed. Failure to adhere to this critical warning may result in the risk of electric shock or electrocution.

Once a plug-in or hardwired installation has been chosen:

1) For 40A plug-in installation, wire the circuit (40A or 50A) with appropriate 14-50 outlet. Install the outlet with the ground prong facing up. Plug in the Charger.
2) For a hardwired installation of the 40A plug-in version of EVIQO Smart EV Charger, remove the original input power cable with NEMA 14-50 plug first. To remove the faceplate — unscrew the 7 screws on the back side. Then, you will need THWN-2 copper wires with the following gauge sizes: L1/L2 8AWG and GND (PE) 10AWG. The pin terminal connectors for L1, L2 and PE are added to the 40A plug-in version installation set (specs on page 15). Please use UL certified components only. Connect the L1 lead to the grid L1, the L2 to L2, and PE lead to the grid PE ground bar. **Torque for L1/L2 IN: 17.7 in·lbs (2.0 N·m).** Conduit of 1" and liquid tight connector will be required. Return the original input power cable to the box. Attach the label indicating the rating to the circuit panel.
3) For hardwired installation of the hardwire version of EVIQO Smart EV Charger, use the original 3-wire whip of 3.2ft with nonmetallic liquid tight flexible electrical conduit provided to hardwire the device following the connection instructions in point 2 above.

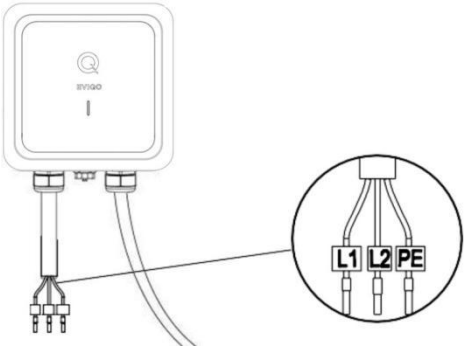

The EVIQO Smart EV Charger has the GFCI protection included.

If you need access to the Amperage Dip Switch and had to detach the faceplate:
Please note the screws are located on the back side so you have to close the device and tighten the 7 screws on the back side before mounting the device onto the wall and fixing the conduit.

WARNING: This device must be grounded.
Disconnect electrical power prior to installing the charging station.

WARNING: Improper connection of the equipment-grounding conductor would result in a risk of electric shock. Check with a qualified electrician if you aren't sure if the product is properly grounded. Don't modify the plug provided with the product – if it doesn't fit the outlet, have a proper outlet installed by an electrician.

7. Plan The Mounting Location

WARNING: In regions prone to frequent thunderstorms, it is recommended to install surge protection at the service panel for all circuits. Additionally, ensure that all power and ground connections, especially those at the breaker and bus bar, are clean and securely tightened.

CAUTION: For reliable performance, ensure the device is installed near the WiFi router to guarantee a strong signal and stable Internet access. Please plan the device's location accordingly, avoiding surfaces that may obstruct the WiFi signal.

Select the appropriate mounting location with electrical capacity sufficient for the EVIQO Smart EV Charger operation:

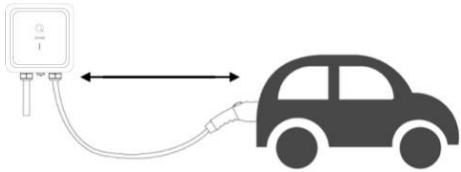

A. Please ensure you have chosen a mounting location which allows the charging cable to reach the car's charging port while still providing reasonable slack. The cable length is 25 ft (7.62 m).

B. For plug-in installation: please check the position of your NEMA 14-50 outlet and preferable place for mounting the EVIQO Smart EV Charger before mounting the device bracket or the holster bracket. Please ensure you have chosen a mounting location which allows the input power cable with NEMA 14-50 plug to effectively reach the NEMA 14-50 outlet. Ensure the input power cable has a slight curve and is not stretched. With NEMA cable installation, be sure to take into account the 37" (95 cm) length of NEMA cable when positioning your charger in relation to the NEMA outlet. This length provides sufficient flexibility in choosing the mounting location for the EV Charger.

C. For hardwired installation: please check a mounting location which allows to effectively hardwire the EV Charger. Note the distance to the breaker panel and/or the junction box. The hardwire version of EVIQO Smart EV Charger comes with a 39" (around 1m) 3-wire whip with liquid tight connector and conduit. If you hardwire a 40A plug-in version of EVIQO Charger - plan your mounting location based on your custom wiring. The unit doesn't have a rear access port, the bottom access port shall be used.

ELECTRIC SHOCK HAZARD: If the status light indicators turn on when the EV charger is plugged in during the installation, the circuit is not off. **STOP IMMEDIATELY.** Unplug EVIQO EV charger and switch off the power to the outlet at the circuit breaker until the installation is complete.

D. Ground connection for plug-in installation: make sure the ground in your NEMA 14-50 outlet is placed on the top to match with the plug of the input power cable which has the

ground prong facing up.

E. Ground connection for hardwire installation: follow the National Electrical Code and all local applicable codes. In case of Ground Fault - please consult a licensed electrician.

F. If you decide to install the EVIQO Smart EV Charger outdoors, this requires using an outdoor-rated, weather-resistant NEMA 14-50 outlet / hardwired installation.

G. Please ensure the holster bracket is mounted at approximately the same level as the EV Charger bracket. It is recommended to keep a comfortable distance between the EVIQO Smart EV Charger and the holster which would allow to properly store the loops of the 25ft charging cable.

H. Both the device and holster must be securely anchored to a mounting surface, such as a stud of sufficient size or a solid wall, to ensure proper installation of the EV charger.

I. It is recommended to mount the device at a height between 3 feet (91.5 cm) and 5.5 feet (167 cm) from the ground. The minimum installation height must be at least 18 inches (46 cm).

8. Mounting

For hardwired installation (if you had to detach the faceplate to get access to the internal components): Please note that the screws are located on the back side so you have to attach the faceplate of the EVIQO Smart EV Charger, close the device and tighten the 7 screws on the back side before mounting the device onto the wall and fixing the conduit.

STEP 1

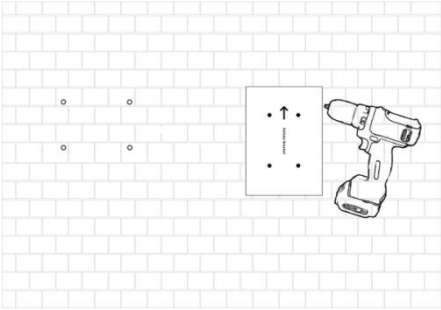

For concrete and brick walls: select the desired mounting location for the EV Charger and the Holster. Use the provided Wall Mount Templates (one for the EV Charger and one for the Holster) to mark the holes for drilling. Use the ⌀8 (8mm / 5/16” diameter) drill. Drill 4 screw holes for the EVIQO Smart EV Charger and 4 for the Holster. The diameter of the holes shall be around 5/16” (0.31" or 8mm) and a depth of 2.05" (5.2cm). When drilling the screw holes, please take note that both templates have arrows indicating the top side for proper alignment.

For wood studs: go to STEP 2, use Phillips Pan Head Screws provided. If you plan to install the EV Charger on drywall, ensure the drywall is sufficiently thick to securely hold it.

STEP 2

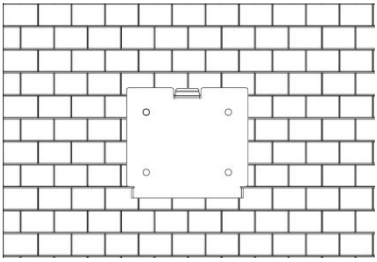

Detach the wall mounting bracket from the EV charger using the Allen Wrench provided in the box. **Don't lose it, you'll need it in the future.**

For concrete and brick walls: after the holes have been drilled (see step 1), use the set of 4 Hexagonal Expansion Screws provided in the box, along with the adjustable ratchet wrench, to securely fasten the wall-mounted bracket for the EVIQO Smart EV Charger onto the wall.

For wood studs and drywalls: use the Phillips Pan Head Screws provided to fix the wall-mounted bracket for the EVIQO Smart EV Charger onto the wall. Make sure the surface is sufficiently thick to hold the EV Charger

STEP 3

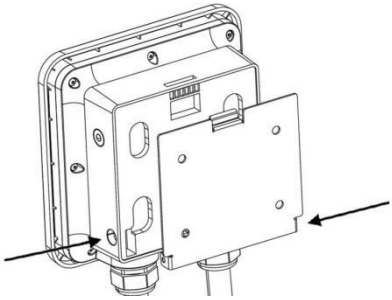

Align the rear notches of the EVIQO Smart EV Charger with the wall-mounted bracket. Insert the Anti-Theft Countersunk Head Screws through the screw holes on the right and left sides of the bracket. Then, use the Allen Wrench provided in the box to securely fasten the EVIQO Smart EV Charger to the wall-mounted bracket.

STEP 4

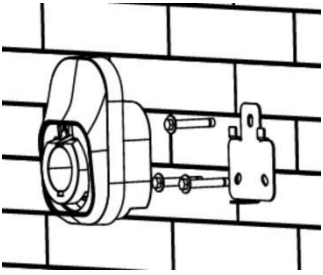

Detach the mounting bracket from the Holster using the Allen Wrench provided in the box.
Don't lose it, you'll need it in the future.
For concrete and brick walls: after the holes have been drilled (see step 1), use the set of 3 Hexagonal Expansion Screws provided in the box, along with the adjustable ratchet wrench, to securely fasten the wall-mounted bracket for the Holster onto the wall.
For wood studs and drywalls: use the Phillips Screws provided to fix wall-mounted bracket for the Holster onto the wall.

STEP 5

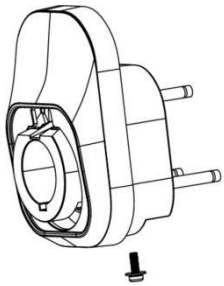

Align the rear notches of the Holster with the wall-mounted bracket. Insert the Anti-Theft Countersunk Head Screw through the screw hole on the bottom side of the bracket. Then, use the Allen Wrench provided in the box to securely fasten the Holster to the wall-mounted bracket.

Final Preparation

Important notes before EVIQO Smart EV Charger is ready to go:

1. To ensure proper cable management, extend the cable to its full length, allowing any kinks or tension to be released. Afterwards, securely store the cable using the holster for neat and organized storage. You can also store the cable on the EVIQO Smart EV Charger as the faceplate has a special lip to hold the cable loops.

2. Restore power to the circuit at the electrical breaker panel by switching on the corresponding breaker.

3. After powering up the EVIQO Smart EV Charger following the installation, the charging status Q-indicator will get solid green, indicating it is ready to charge. By default the EVIQO Smart EV Charger is set for Plug & Charge mode – just plug in the connector to your car and the charging session will start automatically.

4. The small vertical line is the connection indicator located below the Q-indicator. After powering up, it will get flashing blue, indicating it has entered into a configuration mode. Please note the configuration window is 15 minutes. Once expired, restart the device. In this status the device is prepared for configuration and pairing with the smartphone through the EVIQO mobile app.

ATTENTION: Once the EVIQO Smart EV Charger gets powered up for the first time, it may go into the firmware update. This happens OTA (over-the-air), usually in the afternoon. Once updated, the charger will reboot itself to save the changes and briefly go offline. After rebooting, it will power back on and get back online. In case of rebooting, the charging session will be interrupted.

9. Configuring Your Device

ATTENTION: After mounting the EVIQO Smart EV Charger, it is crucial to configure it in order to take full advantage of its wide variety of smart functions.

ATTENTION: Upon powering up, the EV Charger enters a 15-minute configuration mode if not yet configured. Failure to configure the device within this timeframe will result in IDLE mode. If you miss the 15-minute configuration window, simply unpower the device and power it back on. After 20 consecutive skips to configure it, the device will enter a constant IDLE mode on the 21st power-up. To re-enter configuration mode, perform a hard reboot (see Question 4 on page 4 of this Installation Guide). This will clear the device's configuration.

Note: To download the EVIQO mobile app, please use the QR codes.

Download on the App Store

GET IT ON Google Play

EVIQO APP GUIDE:

EVIQO YouTube Videos:

EVIQO app smart features

1. Please note that EVIQO Smart EV Charger plug-in version has 40 Amps max output. EVIQO Smart EV Charger hardwire version is pre-set for 48 Amps.

2. The device is set to the default “Plug and Charge” mode, enabling seamless charging without any prior configuration. Simply plug in the connector into the car, and the charging process will start automatically, providing a hassle-free charging experience.

3. To maximize your savings and enhance the efficiency of your charging experience, configure your EVIPOWER by setting your Electricity Plans, allowing you to track the estimated costs of your charging sessions and take advantage of the most affordable rates available. **How to set: see Question 8 on Page 6 of this Installation Guide.**

4. Additionally, activate the “Schedules” feature to automate your charging sessions, ensuring that your EV charges at the most cost-effective times. By utilizing “Schedules”, you can effectively manage your charging costs and enjoy a more convenient and economical charging experience. The EVIQO app will help you to copy the chosen periods of Electricity Plans to the Schedules in order to automatically charge during the periods with the most affordable electricity tariffs. **How to set: see Question 5 on Page 5 of this Installation Guide.**

5. If you require a one-time scheduled start for your charging session, along with the pre-set amperage, take advantage of the “Delayed Start” function. This feature allows you to conveniently set a specific start time for your charging session, ensuring it begins at the desired time with the pre-configured amperage. **How to set: see Question 7 on Page 5 of this Installation Guide.**

6. Please note that the “Plug and Charge” mode is mutually exclusive with the “Schedules” and “Delayed Start”. If you have enabled the “Plug and Charge” mode, the charging session will start automatically upon plugging the connector into your EV and without pressing START. To utilize the “Schedules” or “Delayed Start” functions, disable the “Plug and Charge” mode.

7. Effortlessly track the duration, power consumption, and estimated costs of your chargings with a single click, utilizing weekly/monthly breakdowns on the Usage Details page of the EVIQO app. **Press on the charts to see the stats for a specific day.** Leverage the Timeline feature (press “...” in the top right corner of the main page) to gain insights into your charging habits and effectively manage costs.

8. The EVIQO app offers a multitude of helpful tips to enhance your charging experience. For instance, when you set up your Electricity Plans within the app, it provides assistance by suggesting the copying of corresponding time periods to your Schedules. This ensures that you take full advantage of the more affordable tariffs during those specific periods. Likewise, when configuring your Schedules, the app reminds of your Electricity Plans and can automatically pre-fill the

scheduled period using the time you have set in your Plans. This feature simplifies the scheduling process and helps you optimize your charging sessions.

9. The EVIQO app offers reminders to plug in before scheduled sessions, provides push notifications with session stats upon completion, and prevents conflicting schedules that overlap. With these capabilities, you can stay on top of your charging routine, receive important charging updates, and ensure smooth and efficient scheduling without any conflicts.

10. Light Codes

10.1 Charging Status Indicator

Please Plug In (Standby mode)	Plugged In (waiting to start charging, communicating with the vehicle)	Charging	Charging Finished	Fault
				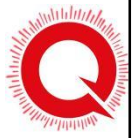
Solid Green	Slow Flashing Green	Slow Flashing Electric Blue	Solid Electric Blue	Flashing Red

10.2 Signal Status Indicator

Connected to the cloud, online	Configuration mode	Connecting to the Internet	No Connection
		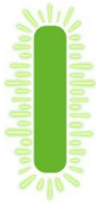	
Solid Electric Blue	Flashing Electric Blue	Flashing Green	Solid Red

10.3 Errors and Warning Messages

Name of the error	Red LED indication	Definition of the error	Ways to fix the error
Voltmeter Fault	Flashing red 1 time	Meter fault	a) Unplug the J1772/J3400 connector and reboot the charger. b) If the fault persists, contact EVIQO technical support.
Control Pilot Fault	Flashing red 2 times 3 seconds interval	Charging guide abnormal	a) Unplug the J1772/J3400 connector and reboot the charger. b) Make sure the CP (Control Pilot) line is fixed in the right place. c) Check if the CP line in the connector runs an electrical short-circuit or open circuit. d) The device will recover automatically when the problem is solved. Reconnect the charger to the EV car for further normal use.
Undervoltage Protection	Flashing red 3 times 3 seconds interval	UVP (Under Voltage Protection) Fault. UVP Fault is triggered when the input voltage is below 90% (208V*0.9=187V) of rated voltage.	a) Unplug the J1772/J3400 connector. b) The device will recover automatically when the input voltage stabilizes within the required range.
Overvoltage Protection	Flashing red 4 times 3 seconds interval	OVP (Over Voltage Protection) Fault. OVP Fault is triggered when the input voltage is over 110% (240V*1.1=264V) of rated voltage.	a) Unplug the J1772/J3400 connector. b) The device will recover automatically when the input voltage stabilizes within the required range.
Overheat Protection Activated	Flashing red 5 times 3 seconds interval	OTP (Over Temperature Protection) Fault. OTP Fault is triggered when the temperature of the charger interior is over 185°F (85°C).	a) Unplug the J1772/J3400 connector. b) The device will recover automatically when the temperature turns lower than 185°F (85°C). c) If the problem persists, turn off the power and carefully check if the thermistor on the PCB works.

Overcurrent Protection	Flashing red 6 times 3 seconds interval	OCP (Overcurrent Protection) Fault. OCP Fault is triggered when the current is over 110% of rated current set. For example for 48A set on the EV Charger ,OCP is 48A*1.1=53A. The value of the overcurrent shall be calculated based on the rated current set through the Amperage Dial Switch inside the EV charger, e.g. if the current Amperage Dial Switch is set for 2, the rated current will be 40A, then the OCP is 110%*40A=44A. For more information about the Amperage Dial Switch - go to page 11-12 of this Guide.	a) Unplug the J1772/J3400 connector. b) The device will recover automatically when the current goes down to a normal range. Reconnect the charger to the EV car for further normal use.
Ground Wire Disconnected	Flashing red 7 times 3 seconds interval	Ground wire not connected	a) Unplug the J1772/J3400 connector. b) Please contact an electrician to make sure the PE (Protective Earthing) line is properly connected. c) In case the device is hardwired, please make sure the input Live line and Neutral line (L1 and L2 lines) are not inversely connected. d) The device will recover automatically when it comes to normal. If this fault occurs during charging, remove the connector after the ground line is properly connected.
Relay Fault	Flashing red 8 times 3 seconds interval	Relay failure during charging	a) Unplug the J1772/J3400 connector and reboot the charger if the problem persists after the unplugging. b) Avoid prolonged simulator or loading machine usage.

			c) Consult a professional to check for electrical short-circuits and ensure dry J1772/J3400 connector. d) Test the relay module with a multimeter while the EV charger is on. Use the AC voltage gear to measure L1_IN and L1_OUT or L2_IN and L2_OUT. If the voltage is between 208V~240V, the relay is disconnected; if the measured value is 0V, the relay is closed. Contact technical support if there are any inconsistencies.
Leakage Protection Activated	Flashing red 9 times 3 seconds interval	RCD (Residual Current Device) Abnormal Fault. RCD Fault is triggered when current leaks at a range of 15-20mA.	a) Unplug the J1772/J3400 connector and reboot the charger. b) If the fault persists, contact a licensed electrician.
RCD Self-Test Fault	Flashing red 10 times 3 seconds interval	When the EV Charger is powered on, it will self-detect whether the leakage detection mechanism is effective.	a) Reboot the charger. b) Please contact a licensed electrician to fix the hardware issue.

11. Reset and Hard Reboot Button

On the right side of the device, there's a reset and hard reboot button.

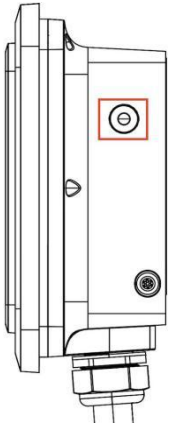

1) **To reset the charger:** press and hold the button for 5 seconds, then release to reset the device. During the restart process, both indicators located on the faceplate will cycle through three colors: red, green, and blue. You will also hear a beep sound.
2) **To reset to factory settings (hard reboot)**: press and hold the button for 15 seconds. The light indicators will turn solid red for 3 seconds before the device shuts down, restarts, and restores to factory settings. You will hear a beep sound. Please wait 1-2 minutes for the unit to reset to factory settings. You will need to reconfigure the device and pair it again with the EVIQO app.

ATTENTION: To prevent accidental resets that could disrupt charging, accidental clicking on the reset button of less than 1 second does nothing.

12. Charging port open / release button (NACS)

If your unit is equipped with a NACS connector, the button is conveniently located on the top side of the handle. This feature operates at a frequency of 315 MHz and complies with US standards. For compatible electric vehicles, a short press of the button will open the car's charging port. The same button shall also be pressed to release the NACS connector from the charging port after the charging session, allowing you to safely remove it.

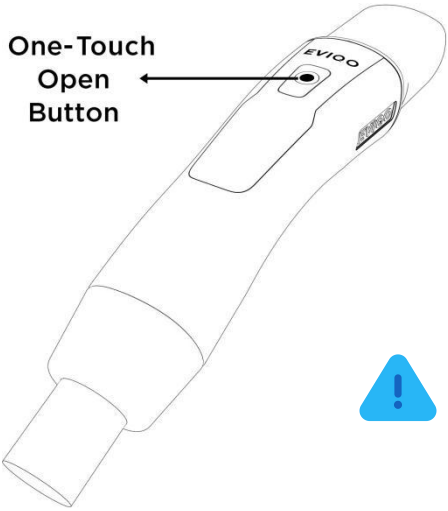

To open the charging port of compatible electric vehicles:

1. Ensure the vehicle is unlocked or recognizes the owner's smartphone in proximity.
2. Press the charging port open/release button located on the NACS connector handle.
3. The vehicle will receive the 315 MHz signal and automatically open the charging port cover, allowing convenient access for charging.

ATTENTION: Please ensure there are no obstacles nearby that could interfere with the connector's signal. If the car's charging port does not open, try pressing the button again from a closer distance, or wait 10-15 seconds before attempting again.

ATTENTION: The charging port open/release button will only function when the vehicle is unlocked or detects the owner's smartphone nearby. This is designed to prevent unauthorized access. Ensure both the vehicle and smartphone are within the operational range for seamless functionality.

13. Limited Warranty

Limited Warranty for EVIPOWER Smart EV Charger by EVIQO.

This Limited Warranty (“Warranty”) is applicable to the original purchaser of a new EVIPOWER Smart EV Charger by EVIQO ("EV Charger") for residential use in the USA and Canada. The Warranty is non-transferable and exclusively valid for the purchaser.

LIMITED 3 YEAR PARTS EXCHANGE WARRANTY: EVIQO TECHNOLOGIES LIMITED (“EVIQO”) provides a warranty for a period of three (3) year from the original purchase date (the “Warranty Period”), covering defects in materials or workmanship of your EV Charger,

subject to the exclusions from Warranty coverage set forth below, provided the EV Charger was used under normal operating conditions and all the recommendations contained in the Installation Guide and EVIQO's website were followed by the user. During the Warranty Period, EVIQO will repair or replace, at its discretion, any defective EV Charger upon the original purchaser's written notice of the defect duly received during the Warranty Period. The Warranty includes parts and factory labor required for repairing the EV Charger, but excludes any on-site labor costs associated with uninstallation or reinstallation of the repaired or replaced EV Charger. It is your responsibility to ensure the correct uninstalling of any defective unit and installing the repaired or replacement EV Charger that is returned to you. Additionally, the cost associated with shipping the EV Charger to the designated address for repair or replacement is not included in the Warranty. Please note the exclusions from Warranty as specified below. You hereby understand and accept that EVIQO may provide remanufactured or reconditioned parts or refurbished or repaired charging stations as replacements under the Warranty. Any replaced parts, whether covered by warranty or not, are owned by EVIQO. Any replacement parts or charging stations provided will be covered for the remaining duration of the original Warranty Period. In cases where the EV Charger is determined by EVIQO to be out-of-warranty or ineligible for warranty service, it will be returned to you. However, if you approve, EVIQO can provide repair or replacement services at their standard charges, which will be at your expense.

Limitation of Liability

EVIQO does not authorize any agent to modify or exceed the warranty obligations of EVIQO. The remedies provided in this limited product warranty are the sole and exclusive remedies available to you. EVIQO does not provide any other express or implied warranties, except for the warranty stated above. All other warranties are excluded to the maximum extent permitted by law. If any implied warranty cannot be disclaimed under applicable law, such warranty shall be limited in duration to the warranty period described above. No warranties apply after the expiration of the warranty period.

Exclusions from Limited Warranty

ATTENTION: Please note that the Warranty on your EV Charger shall not apply to defects or service repairs resulting from the causes listed below:

1. Improper installation, improper site preparation or choosing incorrect location for the installation, improper use and/or maintenance of the EV Charger,

2. Unauthorized modifications, disassembling or alterations made to the EV Charger.

3. Damage caused by accidents, misuse, abuse, vandalism, negligence or using the EV Chargers in a way other than as specified in the applicable documentation (including but not limited to physical damage from being struck by a vehicle).

4. Failure to follow the operating instructions, maintenance or storage guidelines.

5. Power surges, electrical faults, extreme electromagnetic field or fluctuations in voltage.

6. Environmental factors such as extreme temperatures, humidity, floods or exposure to corrosive substances.

7. Repairs or modifications performed by unauthorized personnel.

8. Normal wear and tear, normal aging changes or cosmetic damage such as scratches and dents.

9. Any damage or defects not directly attributable to manufacturing or workmanship issues.

10. Any damage caused by using any third-party unauthorized software, interface, parts, or supplies not supplied and/or approved by EVIQO TECHNOLOGIES in advance in writing.

ATTENTION: The Warranty will not be applicable if the original identification markings, including but not limited to serial numbers, trademarks, safety warnings, or other markings on the EV Charger enclosure, are damaged, altered, or removed, or if the charging station is used or installed for purposes other than in a single-family residence.

ATTENTION: Please note EVIQO does not provide any Warranty for the error-free operation or uninterrupted functionality of any of its services.

Step-by-step instruction to obtain the Warranty service:

1. Contact Customer Service at support@eviqo.io to request a Return Material Authorization ("RMA") number from EVIQO, if at any point during the Warranty period you believe you have a defective EV Charger.

2. Please provide:
   - a detailed description of the issue you are experiencing with the EV Charger for effective troubleshooting,
   - the model number and serial number of your EV Charger,
   - proof of purchase,
   - shipping information,
   - any other relevant details that will assist EVIQO in addressing your request accurately and efficiently.

3. If, upon reviewing your request, it is determined by EVIQO that the defect appears to be covered by your valid Warranty, and your Warranty is still in effect, EVIQO will issue you an RMA number and provide you with the address to return the defective EV Charger.

4. Ship the defective EV Charger to the provided address, ensuring it is packaged in the original shipping box provided or a suitable container to prevent damage. Please ensure to include the RMA reference number in the shipping documentation when returning the defective EV Charger. If your EV Charger is covered by the Warranty, EVIQO will repair or replace it free of charge and cover the shipping expenses for sending it back to you.

14. Compliance

This device complies with part 15 of the FCC Rules.
Operation is subject to the following two conditions:

1. This device may not cause harmful interference.

2. This device must accept any interference received, including interference that may cause undesired operation.

FCC ID:
2BG8P-EVIPOWER248J for J1772 connector model (both 40A and 48A);
2BG8P-EVIPOWER248N for the NACS connector model (both 40A and 48A).

NOTE: This equipment has been tested and found to comply with the limits for a Class B digital device, pursuant to part 15 of the FCC Rules. These limits are designed to provide reasonable protection against harmful interference in a residential installation.

This equipment generates uses and can radiate radio frequency energy and, if not installed and used in accordance with the instructions, may cause harmful interference to radio communications. However, there is no guarantee that interference will not occur in a particular installation. If this equipment does cause harmful interference to radio or television reception, which can be determined by turning the equipment off and on, the user is encouraged to try to correct the interference by one or more of the following measures:

- Reorient or relocate the receiving antenna.
- Increase the separation between the equipment and receiver.
- Connect the equipment into an outlet on a circuit different from that to which the receiver is connected.
- Consult the dealer or an experienced radio/TV technician for help

NOTE: The manufacturer bears no responsibility for any radio or TV interference caused by unauthorized modifications to this equipment. It is important to note that such modifications have the potential to invalidate the user's authority to operate the equipment.

This equipment is designed to comply with the FCC's radiation exposure limits for uncontrolled environments. For safe operation, it should be installed and used with a minimum distance of 20 cm between the radiator and your body. To ensure proper functioning, it is important to avoid placing this transmitter in proximity to any other antenna or transmitter.

Installation notes

EVIPOWER

your home SUPERPOWER

iOS APP

Android APP

EVIQO app Guide

EVIQO YouTube tutorials