EUROFINS ELECTRICAL TESTING SERVICE (SHENZHEN) CO., LTD.

RADIO TEST - REPORT

FCC Compliance Test Report for

Product name: Licensed Bentley Bacalar Ride On (12V)

Model name: 060-ROT-21L, JE1008

FCC ID: 2BBXUJE1008

Test Report Number: EFGX23060060-IE-02-E02

Eurofins Electrical Testing Service (Shenzhen) Co., Ltd.
1st Floor, Building 2, Chungu, Meisheng Huigu Science and Technology Park,
No. 83 Dabao Road, Bao'an District, Shenzhen. P.R.China

Phone: +86-0755-829118671
Fax: +86-0755-82910749

1	**General Information**	**3**
1.1	Notes	3
1.2	Testing laboratory	4
1.3	Details of applicant	4
1.4	Details of manufacturer	4
1.5	Application details	5
1.6	Test item	5
1.7	Test standards	5
2	**Technical test**	**6**
2.1	Summary of test results	6
2.2	Test environment	6
2.3	Measurement uncertainty	6
2.4	Test mode	7
2.5	Test equipment utilized	8
2.6	Auxiliary equipment used during test	9
2.7	Test software information:	9
2.8	Test setup-	10
2.9	Test results	12
3	**Technical Requirement**	**13**
3.1	Conducted emission AC power port	13
3.2	Duty cycle	14
3.3	20dB Occupied bandwidth	15
3.4	99% Occupied Bandwidth	16
3.5	Carrier frequency separation	17
3.6	Number of hopping frequencies	18
3.7	Time of occupancy (dwell time)	19
3.8	Peak Output Power	20
3.9	Conducted Band-edge & Spurious Emissions	21
3.10	Radiated emissions for transmitter	22
3.11	Hopping sequence requirement	24
4	**Test Setup Photos**	**25**
5	**External Photo**	**25**
6	**Internal Photos**	**25**
7	**Appendix**	**25**

1 General Information

1.1 Notes

The results of this test report relate exclusively to the item tested as specified in chapter “Description of test item” and are not transferable to any other test items.

Eurofins Electrical Testing Service (Shenzhen) Co., Ltd. is not responsible for any generalisations and conclusions drawn from this report. Any modification of the test item can lead to invalidity of test results and this test report may therefore be not applicable to the modified test item.

The test report may only be reproduced or published in full. Reproducing or publishing extracts of the report requires the prior written approval of the Eurofins Electrical Testing Service (Shenzhen) Co., Ltd.

This document is subject to the General Terms and Conditions and the Testing and Certification System of Eurofins Electrical Testing Service (Shenzhen) Co., Ltd., available on request or accessible at www.eurofins.com.

Operator:

2023-08-08		Bruce Zheng / Project Engineer	Bruce Zheng
Date	Eurofins-Lab.	Name / Title	Signature

Technical responsibility for area of testing:

2023-08-08		Albert Xu / Lab Manager	Albert Xu
Date	Eurofins	Name / Title	Signature

1.2 Testing laboratory

Eurofins Electrical Testing Service (Shenzhen) Co., Ltd.
1st Floor, Building 2, Chungu, Meisheng Huigu Science and Technology Park, No. 83 Dabao Road, Bao'an District, Shenzhen. P.R.China.
Telephone : +86-755-82911867
Fax : +86-755-82910749
The Laboratory has passed the Accreditation by the American Association for Laboratory Accrediation (A2LA). The Accreditation number is 5376.01
The Laboratory has been listed by industry Canada to perform electromagnetic emission measurements, The CAB identifier is CN0088

1.3 Details of applicant

Name	:	ZHEJIANG JIAJIA RIDE-ON CO.,LTD
Address	:	XINCANG INDUSTRIAL ZONE PINGHU CITY,ZHEJIANG PROVINCE,CHINA.
Telephone	:	./.
Fax	:	./.

1.4 Details of manufacturer

Name	:	ZHEJIANG JIAJIA RIDE-ON CO.,LTD
Address	:	XINCANG INDUSTRIAL ZONE PINGHU CITY,ZHEJIANG PROVINCE,CHINA.
Telephone	:	./.
Fax	:	./.

1.5 Application details

Date of receipt of application	:	2023-06-02
Date of receipt of test item	:	2023-06-02
Date of test	:	2023-06-02 to 2023-06-15
Date of issue	:	2023-08-08

1.6 Test item

Product type	:	Licensed Bentley Bacalar Ride On (12V)
Test Model	:	JE1008
Sample ID	:	230602-14-001
Model name	:	060-ROT-21L, JE1008
Brand name	:	./.
Serial number	:	./.
Ratings	:	Battery:12V,4.5Ah Charger output:12V 500mA
Test voltage	:	12Vdc
FCC ID	:	2BBXUJE1008
PMN	:	Licensed Bentley Bacalar Ride On (12V)

RadioTechnical data

Frequency range	:	2402MHz – 2480MHz
Radio Tech.	:	Bluetooth Basic Rate+Enhanced Data Rate
Frequency channel	:	CH0 – CH78, Total 79 channels
Modulation	:	GFSK, π/4 DQPSK, 8DPSK
Antenna type	:	PCB Antenna
Maximum antenna gain	:	-0.58 dBi
Additional information	:	./.

The above sample(s) and sample information was/were submitted and identified on behalf of the applicant.
Eurofins assures objectivity and impartiality of the test, and fulfills the obligation of confidentiality for applicant's commercial information and technical documents.

1.7 Test standards

Test Standards	
FCC Part 15 Subpart C	PART 15 - RADIO FREQUENCY DEVICES Subpart C - Intentional Radiators

Test Method
1: ANSI C63.4-2014, American National Standard for Methods of Measurement of Radio-Noise Emissions from Low-Voltage Electrical and Electronic Equipment in the Range of 9 kHz to 40 GHz.
2: ANSI C63.10-2013, American National Standard for Testing Unlicensed Wireless Devices.
3: KDB558074 D01 15.247 Meas Guidance v05r02

2 Technical test

2.1 Summary of test results

No deviations from the technical specification(s) were ascertained in the course of the tests performed. ☒

or

The deviations as specified were ascertained in the course of the tests performed. ☐

2.2 Test environment

Ac line conducted

Enviroment Parameter	Temperature	Relative Humidity
101.2kPa	23.7 ℃	61.3%

RF conducted

Enviroment Parameter	Temperature	Relative Humidity
101.2kPa	24.7 ℃	43.1%

Radiated

Enviroment Parameter	Temperature	Relative Humidity
101.2kPa	24.3 ℃	51.6%

2.3 Measurement uncertainty

The uncertainty is calculated using the methods suggested in the "Guide to the Expression of Uncertainty in Measurement" (GUM) published by ISO.

System Measurement Uncertainty	
Test Items	Extended Uncertainty
Uncertainty in conducted measurements	1.96dB
Uncertainty for Conducted RF test	RF Power Conducted: 1.16dB Frequency test involved: 1.05×10-7 or 1%
Uncertainty for Radiated Spurious Emission 25MHz-3000MHz	Horizontal: 4.46dB; Vertical: 4.54dB;
Uncertainty for Radiated Spurious Emission 3000MHz-18000MHz	Horizontal: 4.42dB; Vertical: 4.41dB;
Uncertainty for Radiated Spurious Emission 18000MHz-40000MHz	Horizontal: 4.63dB; Vertical: 4.62dB;

2.4 Test mode

Center Frequency of Each Channel:

CHANNEL	FREQ. (MHZ)	CHANNEL	FREQ. (MHZ)	CHANNEL	FREQ. (MHZ)	CHANNEL	FREQ. (MHZ)
0	2402	20	2422	40	2442	60	2462
1	2403	21	2423	41	2443	61	2463
2	2404	22	2424	42	2444	62	2464
3	2405	23	2425	43	2445	63	2465
4	2406	24	2426	44	2446	64	2466
5	2407	25	2427	45	2447	65	2467
6	2408	26	2428	46	2448	66	2468
7	2409	27	2429	47	2449	67	2469
8	2410	28	2430	48	2450	68	2470
9	2411	29	2431	49	2451	69	2471
10	2412	30	2432	50	2452	70	2472
11	2413	31	2433	51	2453	71	2473
12	2414	32	2434	52	2454	72	2474
13	2415	33	2435	53	2455	73	2475
14	2416	34	2436	54	2456	74	2476
15	2417	35	2437	55	2457	75	2477
16	2418	36	2438	56	2458	76	2478
17	2419	37	2439	57	2459	77	2479
18	2420	38	2440	58	2460	78	2480
19	2421	39	2441	59	2461		

The channels marked with the blue background are the bottom, mid and top channels used in the tests
The EUT was set at continuously transmitting mode during the test.
Below modulations was tested and recorded in the report:
GFSK , π/4 DQPSK, 8DPSK

2.5 Test equipment utilized

EQUIPMENT ID	EQUIPMENT NAME	MODEL NO.	CAL. DUE DATE
23-2-13-05	EMI Test Receiver	ESR3	2024-03-21
23-2-13-06	LISN	NNLK 8127 RC	2024-03-21
23-2-10-16	Attenuator	VTSD 9561-F	2024-03-21
23-2-10-63	Temperature & Humidity Meter	COS-03	2024-03-21
23-2-10-65	Barometer	Baro	2024-03-21
23-2-13-12	Signal Analyzer	N9010B-544	2024-03-21
23-2-13-13	BT/WLAN Tester	CMW270	2024-03-21
23-2-13-14	Signal Generator	N5183B-520	2024-03-21
23-2-13-15	Vector Signal Generator	N5182B-506	2024-03-21
23-2-10-43	Switch and Control Unit	ERIT-E-JS0806-2	2024-03-21
23-2-10-44	DC power supply	E3642A	2024-03-21
23-2-10-45	Temperature test chamber	SG-80-CC-2	2024-03-21
23-2-10-50	Temperature & Humidity Meter	COS-03	2024-03-21
23-2-10-66	Barometer	Baro	2024-03-21
23-2-13-01	EMI Test Receiver	ESR7	2024-03-21
23-2-13-02	Signal Analyzer	N9020B-544	2024-03-21
23-2-12-01	Active Loop Antenna	FMZB 1519B	2024-05-29
23-2-12-02	TRILOG Broadband Antenna	VULB9168	2024-05-29
23-2-12-03	Horn Antenna	3117	2024-05-29
23-2-12-04	Horn Antenna	BBHA 9170	2024-05-29
23-2-10-01	Preamplifier	BBV9745	2024-03-21
23-2-10-02	Preamplifier	TAP01018048	2024-03-21
23-2-10-03	Preamplifier	TAP18040048	2024-03-21
23-2-10-62	Temperature & Humidity Meter	COS-03	2024-03-21
23-2-10-64	Barometer	Baro	2024-03-21
23-2-10-14	Switch and Control Unit	ERIT-E-JS0806-SF1	N/A
23-2-13-03	EMI Test Receiver	ESR7	2024-03-21
23-2-13-04	Signal Analyzer	N9020B-526	2024-03-21
23-2-12-06	Active Loop Antenna	FMZB 1519B	2024-05-05
23-2-12-07	TRILOG Broadband Antenna	VULB9168	2024-05-05
23-2-12-08	Horn Antenna	3117	2024-05-05
23-2-10-46	Preamplifier	BBV9745	2024-03-21
23-2-10-47	Preamplifier	TAP01018048	2024-03-21
23-2-10-61	Temperature & Humidity Meter	COS-03	2024-03-21
23-2-10-52	Barometer	Baro	2024-03-21
23-2-10-15	Switch and Control Unit	ERIT-E-JS0806-SF1	N/A

2.6 Auxiliary equipment used during test

DESCRIPTION	MANUFACTURER	MODEL NO.	S/N
Laptop	LENOVO	TP00096A	PF-1QH0LV

2.7 Test software information:

Test Software&Version	FCC Assist		
Mode	Power setting	TX Pattern	Modulation Type
DH1/5	10	PRBS9	GFSK
2-DH1/5	10	PRBS9	π/4 DQPSK
3-DH1/5	10	PRBS9	8DPSK

2.8 Test setup-

Ac line conducted

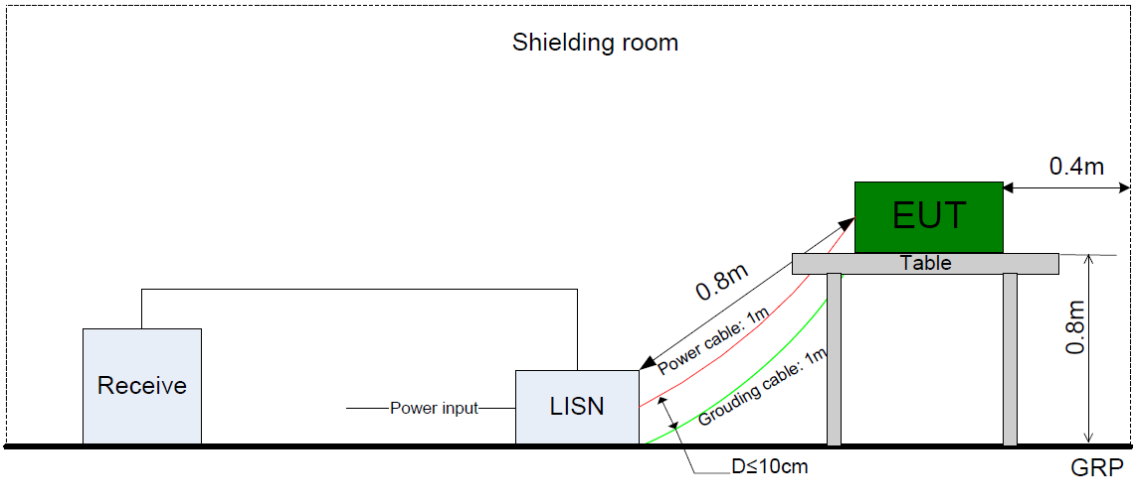

RF Conducted tests

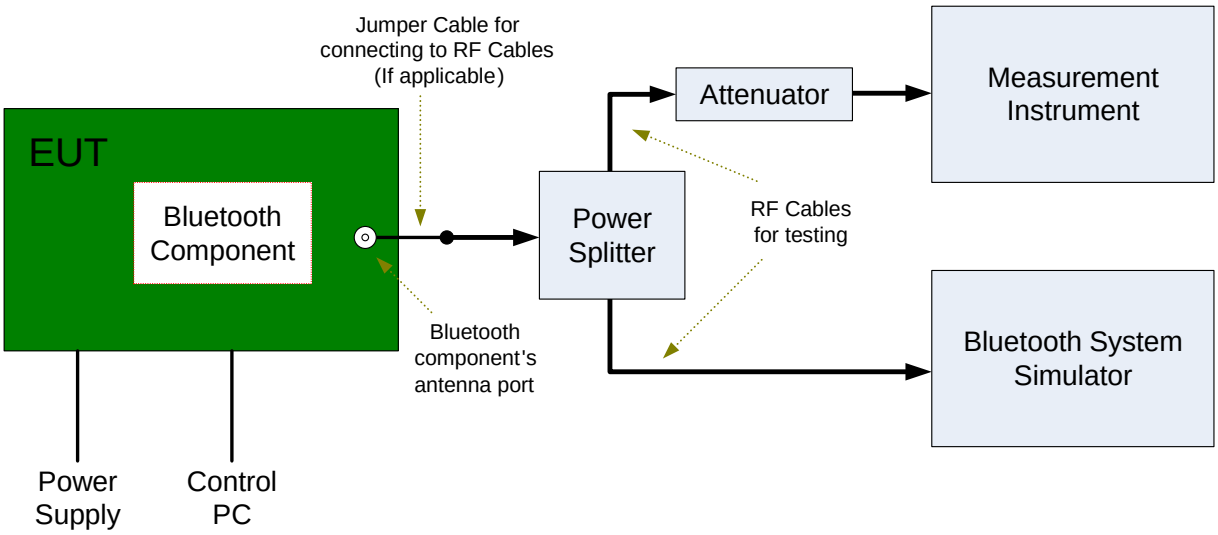

Radiated tests below 30MHz

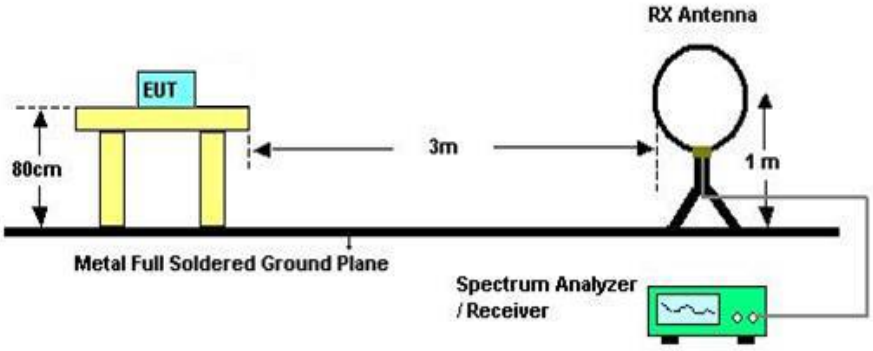

Radiated tests below 1GHz

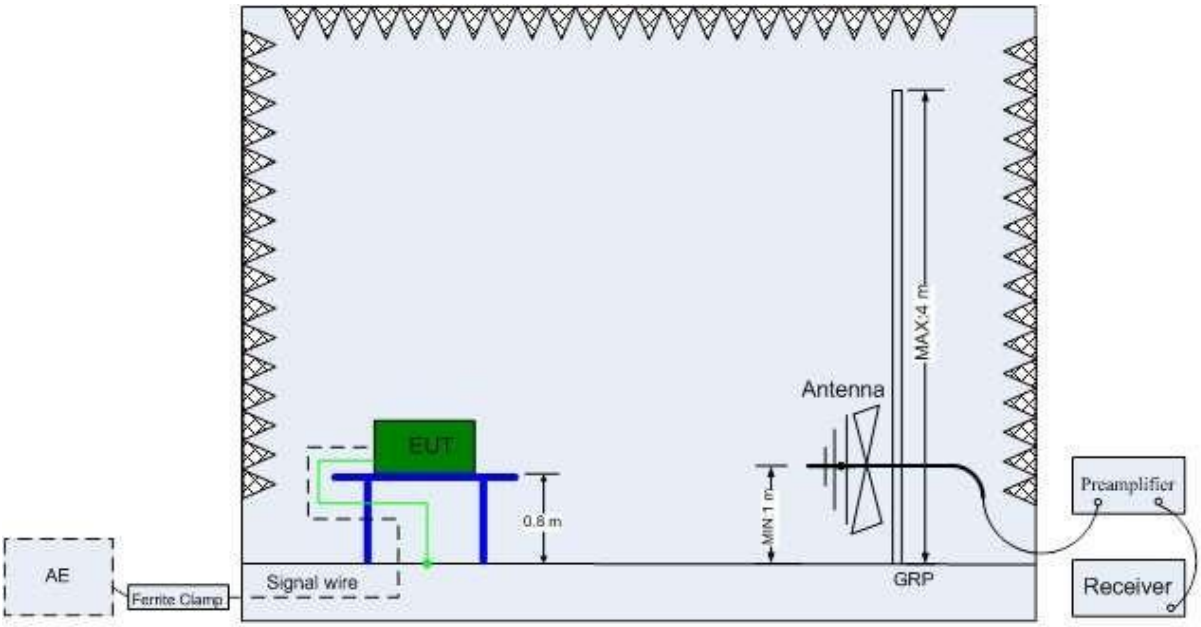

Radiated tests above 1GHz

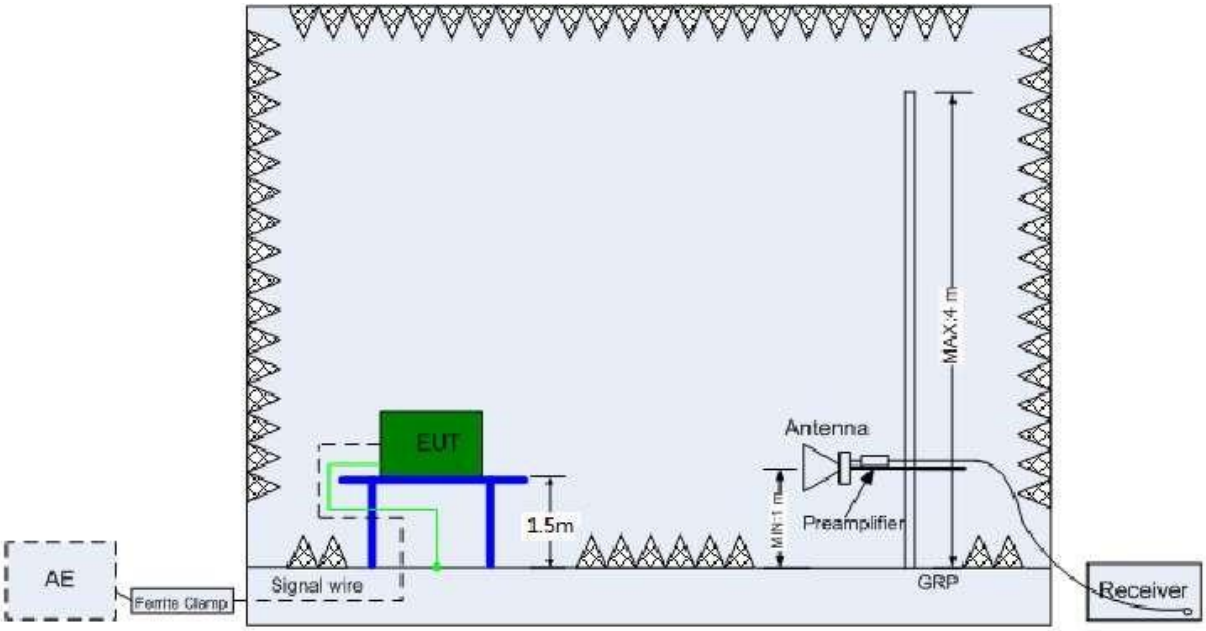

2.9 Test results

☒ 1st test ☐ test after modification ☐ production test

Technical Requirements				
FCC Part 15 Subpart C				
Test Condition		Test Result	Verdict	Test Site
§15.207	Conducted emission AC power port	Appendix K	Pass	Site 1
§15.247(b)(1)	Conducted output power for FHSS	Appendix C	Pass	Site 1
§15.247(b)(3)	Conducted output power for DTS	--	N/A	--
§15.247(e)	Power spectral density	--	N/A	--
§15.247(a)(2)	6dB bandwidth	--	N/A	--
§15.247(a)(1)	20dB Occupied bandwidth	Appendix A	Pass	Site 1
--	99% Occupied Bandwidth	Appendix B	Pass	Site 1
§15.247(a)(1)	Carrier frequency separation	Appendix D	Pass	Site 1
§15.247(a)(1)(iii)	Number of hopping frequencies	Appendix F	Pass	Site 1
§15.247(a)(1)(iii)	Dwell Time	Appendix E	Pass	Site 1
§15.247(d) §15.205	Conducted Spurious Emissions	Appendix H	Pass	Site 1
§15.247(d)	Band edge	Appendix G	Pass	Site 1
§15.247(d) & §15.209 & §15.205	Radiated emissions for trans-mitter	Appendix L	Pass	Site 1
--	Duty cycle	Appendix I	Pass	Site 1
§15.203	Antenna requirement	See note 1	Pass	--

Remark 1: N/A – Not Applicable.
Note 1: The EUT uses PCB antenna. According to §15.203, it is considered sufficiently to comply with the provisions of this section.

3 Technical Requirement

3.1 Conducted emission AC power port

Test Method:
The test method was refered to the subclause 6.2 of ANSI C63.10-2013.

The EUT is placed on a non-conducting table 40 cm from the vertical ground plane and 80 cm above the horizontal ground plane. The EUT is configured in accordance with ANSI C63.10.

The receiver is set to a resolution bandwidth of 9 kHz. Peak detection is used unless otherwise noted as quasi-peak or average.

Line conducted data is recorded for both Neutral and Live lines.

Limit:

FCC §15.207 (a)

Frequency	QP Limit	AV Limit
MHz	**dBµV**	**dBµV**
0.150-0.500	66-56*	56-46*
0.500-5	56	46
5-30	60	50

Decreasing linear.

3.2 Duty cycle

Test Method:
The test method was refered to the subclause 11.6 of ANSI C63.10-2013.

Measurements of duty cycle and transmission duration shall be performed using one of the following techniques:

a) A diode detector and an oscilloscope that together have a sufficiently short response time to permit accurate measurements of the ON and OFF times of the transmitted signal.

b) The zero-span mode on a spectrum analyzer or EMI receiver if the response time and spacing between bins on the sweep are sufficient to permit accurate measurements of the ON and OFF times of the transmitted signal:

   1) Set the center frequency of the instrument to the center frequency of the transmission.

   2) Set RBW ≧ OBW if possible; otherwise, set RBW to the largest available value.

   3) Set VBW ≧ RBW. Set detector = peak or average.

   4) The zero-span measurement method shall not be used unless both RBW and VBW are > 50/*T* and the number of sweep points across duration *T* exceeds 100. (For example, if VBW and/or RBW are limited to 3 MHz, then the zero-span method of measuring the duty cycle shall not be used if *T* ≤16.7 μs.)

Limit:

None; for reporting purposes only.

3.3 20dB Occupied bandwidth

Test Method:
The test method was refered to the subclause 6.9.2 of ANSI C63.10-2013.

The occupied bandwidth is measured as the width of the spectral envelope of the modulated signal, at an amplitude level reduced from a reference value by a specified ratio (or in decibels, a specified number of dB down from the reference value). Typical ratios, expressed in dB, are −6 dB, −20 dB, and −26 dB, corresponding to 6 dB BW, 20 dB BW, and 26 dB BW, respectively. In this subclause, the ratio is designated by "−xx dB." The reference value is either the level of the unmodulated carrier or the highest level of the spectral envelope of the modulated signal, as stated by the applicable requirement. Some requirements might specify a specific maximum or minimum value for the "−xx dB" bandwidth; other requirements might specify that the "−xx dB" bandwidth be entirely contained within the authorized or designated frequency band.

a) The spectrum analyzer center frequency is set to the nominal EUT channel center frequency. The span range for the EMI receiver or spectrum analyzer shall be between two times and five times the OBW.

b) The nominal IF filter bandwidth (3 dB RBW) shall be in the range of 1% to 5% of the OBW and video bandwidth (VBW) shall be approximately three times RBW, unless otherwise specified by the applicable requirement.

c) Set the reference level of the instrument as required, keeping the signal from exceeding the maximum input mixer level for linear operation. In general, the peak of the spectral envelope shall be more than [10 log (OBW/RBW)] below the reference level. Specific guidance is given in 4.1.5.2.

d) Steps a) through c) might require iteration to adjust within the specified tolerances.

e) The dynamic range of the instrument at the selected RBW shall be more than 10 dB below the target "−xx dB down" requirement; that is, if the requirement calls for measuring the −20 dB OBW, the instrument noise floor at the selected RBW shall be at least 30 dB below the reference value.

f) Set detection mode to peak and trace mode to max hold.

g) Determine the reference value: Set the EUT to transmit an unmodulated carrier or modulated signal, as applicable. Allow the trace to stabilize. Set the spectrum analyzer marker to the highest level of the displayed trace (this is the reference value).

h) Determine the "−xx dB down amplitude" using [(reference value) − xx]. Alternatively, this calculation may be made by using the marker-delta function of the instrument.

i) If the reference value is determined by an unmodulated carrier, then turn the EUT modulation ON, and either clear the existing trace or start a new trace on the spectrum analyzer and allow the new trace to stabilize. Otherwise, the trace from step g) shall be used for step j).

j) Place two markers, one at the lowest frequency and the other at the highest frequency of the envelope of the spectral display, such that each marker is at or slightly below the "íxx dB down amplitude" determined in step h). If a marker is below this "−xx dB down amplitude" value, then it shall be as close as possible to this value. The occupied bandwidth is the frequency difference between the two markers. Alternatively, set a marker at the lowest frequency of the envelope of the spectral display, such that the marker is at or slightly below the "íxx dB down amplitude" determined in step h). Reset the marker-delta function and move the marker to the other side of the emission until the delta marker amplitude is at the same level as the reference marker amplitude. The marker-delta frequency reading at this point is the specified emission bandwidth.

k) The occupied bandwidth shall be reported by providing plot(s) of the measuring instrument display; the plot axes and the scale units per division shall be clearly labeled. Tabular data may be reported in addition to the plot(s).

Limit:

None; for reporting purposes only.

3.4 99% Occupied Bandwidth

Test Method:
The test method was refered to the subclause 6.9.3 of ANSI C63.10-2013.

The occupied bandwidth is the frequency bandwidth such that, below its lower and above its upper frequency limits, the mean powers are each equal to 0.5% of the total mean power of the given emission. The following procedure shall be used for measuring 99% power bandwidth:

a) The instrument center frequency is set to the nominal EUT channel center frequency. The frequency span for the spectrum analyzer shall be between 1.5 times and 5.0 times the OBW.

b) The nominal IF filter bandwidth (3 dB RBW) shall be in the range of 1% to 5% of the OBW, and VBW shall be approximately three times the RBW, unless otherwise specified by the applicable requirement.

c) Set the reference level of the instrument as required, keeping the signal from exceeding the maximum input mixer level for linear operation. In general, the peak of the spectral envelope shall be more than [10 log (OBW/RBW)] below the reference level. Specific guidance is given in 4.1.5.2.

d) Step a) through step c) might require iteration to adjust within the specified range.

e) Video averaging is not permitted. Where practical, a sample detection and single sweep mode shall be used. Otherwise, peak detection and max hold mode (until the trace stabilizes) shall be used.

f) Use the 99% power bandwidth function of the instrument (if available) and report the measured bandwidth.

g) If the instrument does not have a 99% power bandwidth function, then the trace data points are recovered and directly summed in linear power terms. The recovered amplitude data points, beginning at the lowest frequency, are placed in a running sum until 0.5% of the total is reached; that frequency is recorded as the lower frequency. The process is repeated until 99.5% of the total is reached; that frequency is recorded as the upper frequency. The 99% power bandwidth is the difference between these two frequencies.

h) The occupied bandwidth shall be reported by providing plot(s) of the measuring instrument display; the plot axes and the scale units per division shall be clearly labeled. Tabular data may be reported in addition to the plot(s).

Limit:

None; for reporting purposes only.

3.5 Carrier frequency separation

Test Method:
The test method was refered to the subclause 7.8.2 of ANSI C63.10-2013.

The EUT shall have its hopping function enabled. Use the following spectrum analyzer settings:

a) Span: Wide enough to capture the peaks of two adjacent channels.

b) RBW: Start with the RBW set to approximately 30% of the channel spacing; adjust as necessary to best identify the center of each individual channel.

c) Video (or average) bandwidth (VBW) ≥ RBW.

d) Sweep: Auto.

e) Detector function: Peak.

f) Trace: Max hold.

g) Allow the trace to stabilize.

Limit:

FCC §15.247 (a) (1)

Frequency hopping systems shall have hopping channel carrier frequencies separated by a minimum of 25 kHz or the 20 dB bandwidth of the hoping channel, whichever is greater.

Alternatively, frequency hopping systems operating in the 2400-2483.5 MHz band may have hopping channel carrier frequencies that are separated by 25 kHz or two-thirds of the 20 dB bandwidth of the hopping channel, whichever is greater, provided the systems operate with an output power no greater than 125 mW.

Test Result: Pass

3.6 Number of hopping frequencies

Test Method:
The test method was refered to the subclause 7.8.3 of ANSI C63.10-2013.

The EUT shall have its hopping function enabled. Use the following spectrum analyzer settings:

a) Span: The frequency band of operation. Depending on the number of channels the device supports, it may be necessary to divide the frequency range of operation across multiple spans, to allow the individual channels to be clearly seen.

b) RBW: To identify clearly the individual channels, set the RBW to less than 30% of the channel spacing or the 20 dB bandwidth, whichever is smaller.

c) VBW ≥ RBW.

d) Sweep: Auto.

e) Detector function: Peak.

f) Trace: Max hold.

g) Allow the trace to stabilize.

Limit:

FCC §15.247 (a) (1) (iii)

Frequency hopping systems in the 2400-2483.5 MHz band shall use at least 15 channels.

Test Result: Pass

3.7 Time of occupancy (dwell time)

Test Method:
The test method was refered to the subclause 7.8.4 of ANSI C63.10-2013.

The EUT shall have its hopping function enabled. Use the following spectrum analyzer settings:

a) Span: Zero span, centered on a hopping channel.

b) RBW shall be ≦ channel spacing and where possible RBW should be set >> 1 / *T*, where *T* is the expected dwell time per channel.

c) Sweep: As necessary to capture the entire dwell time per hopping channel; where possible use a video trigger and trigger delay so that the transmitted signal starts a little to the right of the start of the plot. The trigger level might need slight adjustment to prevent triggering when the system hops on an adjacent channel; a second plot might be needed with a longer sweep time to show two successive hops on a channel.

d) Detector function: Peak.

e) Trace: Max hold.

Use the marker-delta function to determine the transmit time per hop. If this value varies with different modes of operation (data rate, modulation format, number of hopping channels, etc.), then repeat this test for each variation in transmit time.

Repeat the measurement using a longer sweep time to determine the number of hops over the period specified in the requirements. The sweep time shall be equal to, or less than, the period specified in the requirements. Determine the number of hops over the sweep time and calculate the total number of hops in the period specified in the requirements, using the following equation:

(Number of hops in the period specified in the requirements) =
(number of hops on spectrum analyzer) × (period specified in the requirements / analyzer sweep time)

The average time of occupancy is calculated from the transmit time per hop multiplied by the number of hops in the period specified in the requirements. If the number of hops in a specific time varies with different modes of operation (data rate, modulation format, number of hopping channels, etc.), then repeat this test for each variation.

Limit:

FCC §15.247 (a) (1) (iii)

The average time of occupancy on any channel shall not be greater than 0.4 seconds within a period of 0.4 seconds multiplied by the number of hopping channels employed.

Test Result: Pass

3.8 Peak Output Power

Test Method:
The test method was refered to the subclause 7.8.5 of ANSI C63.10-2013.

This is an RF-conducted test to evaluate maximum peak output power. Use a direct connection between the antenna port of the unlicensed wireless device and the spectrum analyzer, through suitable attenuation. The hopping shall be disabled for this test:

a) Use the following spectrum analyzer settings:
   1) Span: Approximately five times the 20 dB bandwidth, centered on a hopping channel.
   2) RBW > 20 dB bandwidth of the emission being measured.
   3) VBW ≧ RBW.
   4) Sweep: Auto.
   5) Detector function: Peak.
   6) Trace: Max hold.
b) Allow trace to stabilize.
c) Use the marker-to-peak function to set the marker to the peak of the emission.
d) The indicated level is the peak output power, after any corrections for external attenuators and cables.
e) A plot of the test results and setup description shall be included in the test report.

NOTE—A peak responding power meter may be used, where the power meter and sensor system video bandwidth is greater than the occupied bandwidth of the unlicensed wireless device, rather than a spectrum analyzer.

Limits:

§15.247 (b) (1)

For FHSs operating in the band 2400-2483.5 MHz, the maximum peak conducted output power shall not exceed 1.0 W if the hopset uses 75 or more hopping channels; the maximum peak conducted output power shall not exceed 0.125 W if the hopset uses less than 75 hopping channels. The e.i.r.p. shall not exceed 4 W, except as provided in section 5.4(e).

Test Result: Pass

3.9 Conducted Band-edge & Spurious Emissions

Test Method:
The test method was refered to the subclause 7.8.6 & 7.8.8 of ANSI C63.10-2013.

The transmitter output is connected to a spectrum analyzer.The resolution bandwidth is set to 100 kHz.The video bandwidth is set to 300 kHz.

The spectrum from 30 MHz to 26 GHz is investigated with the transmitter set to the lowest, middle, and highest channels.

The bandedges at 2.4 and 2.4835 GHz are investigated with the transmitter set to the normal hopping mode.

Limit:

FCC §15.247 (d)

Limit = -20 dBc

Test Result: Pass

3.10 Radiated emissions for transmitter

Test Method:
Radiated Spurious Emissions Below 30MHz: ANSI C63.10-2013 Section 6.4
Radiated Spurious Emissions 30-1000MHz: ANSI C63.10-2013 Section 6.3 and 6.5
Radiated Spurious Emissions above 1GHz: ANSI C63.10-2013 Section 6.3 and 6.6
Radiated Band-edge: ANSI C63.10-2013 Section 6.10.5

1: The EUT was place on a turn table which is 1.5m above ground plane for above 1GHz and 0.8m above ground for below 1GHz at 3 meter chamber room for test. The table was rotated 360 degrees to determine the position of the highest radiation.
2: The EUT was set 3 meters away from the interference – receiving antenna, which was mounted on the top of a variable – height antenna tower.
3: The height of antenna is varied from one meter to four meters above the ground to determine the maximum value of the field strength. Both horizontal and vertical polarizations of the antenna are set to make the measurement.
4: For each suspected emission, the EUT was arranged to its worst case and then the antenna was tuned to heights from 1 meter to 4 meters and the rotatable table was turned from 0 degrees to 360 degrees to find the maximum reading.
5: Use the following spectrum analyzer settings According to C63.10:
For Above 1GHz
Span = wide enough to capture the peak level of the in-band emission and all spurious
RBW = 1MHz, VBW≥RBW for peak measurement and VBW = 10Hz for average measurement, Sweep = auto, Detector function = peak, Trace = max hold.
For Below 1GHz
Use the following spectrum analyzer settings:
Span = wide enough to capture the peak level of the in-band emission and all spurious
RBW = 100 KHz, VBW≥RBW for peak measurement, Sweep = auto, Detector function = peak, Trace = max hold.
For Below 30MHz
Use the following spectrum analyzer settings:
Span = wide enough to capture the peak level of the in-band emission and all spurious
RBW = 200 Hz, VBW≥RBW from 9KHz to 0.15MHz, RBW 9KHz VBW≥RBW from 0.15MHz to 30MHz for peak measurement, Sweep = auto, Detector function = peak, Trace = max hold.

Note:
1: The resolution bandwidth and video bandwidth of test receiver/spectrum analyzer is 120 KHz for Quasi-peak detection (QP) at frequency below 1GHz.
2: The resolution bandwidth of test receiver/spectrum analyzer is 1MHz and the video bandwidth is 3MHz for peak detection (PK) at frequency above 1GHz.
3: The resolution bandwidth of test receiver/spectrum analyzer is 1MHz and the video bandwidth is 3MHz for RMS Average ((duty cycle < 98%) for Average detection (AV) at frequency above 1GHz, then the measurement results was added to a correction factor (20log(1/duty cycle)).
4: The resolution bandwidth of test receiver/spectrum analyzer is 1MHz and the video bandwidth is 10Hz (duty cycle > 98%) for Average detection (AV) at frequency above 1GHz.
5: When duty cycle <98%, The resolution bandwidth of test receiver/spectrum analyzer is 1MHz and the video bandwidth is VBW ≥ 1 / T, the T is transmission duration (T).

Limit:

FCC §15.205 and §15.209

Frequency Range (MHz)	Field Strength Limit (uV/m) at 3 m	Field Strength Limit (dBuV/m) at 3 m
0.009-0.490	2400/F(kHz) @ 300 m	-
0.490-1.705	24000/F(kHz) @ 30 m	-
1.705 - 30	30 @ 30m	-
30 - 88	100	40
88 - 216	150	43.5
216 - 960	200	46
Above 960	500	54

§15.205 Restricted bands of operation

MHz	MHz	MHz	GHz
0.090-0.110	16.42-16.423	399.9-410	4.5-5.15
0.495-0.505	16.69475-16.69525	608-614	5.35-5.46
2.1735-2.1905	16.80425-16.80475	960-1240	7.25-7.75
4.125-4.128	25.5-25.67	1300-1427	8.025-8.5
4.17725-4.17775	37.5-38.25	1435-1626.5	9.0-9.2
4.20725-4.20775	73-74.6	1645.5-1646.5	9.3-9.5
6.215-6.218	74.8-75.2	1660-1710	10.6-12.7
6.26775-6.26825	108-121.94	1718.8-1722.2	13.25-13.4
6.31175-6.31225	123-138	2200-2300	14.47-14.5
8.291-8.294	149.9-150.05	2310-2390	15.35-16.2
8.362-8.366	156.52475-156.52525	2483.5-2500	17.7-21.4
8.37625-8.38675	156.7-156.9	2690-2900	22.01-23.12
8.41425-8.41475	162.0125-167.17	3260-3267	23.6-24.0
12.29-12.293	167.72-173.2	3332-3339	31.2-31.8
12.51975-12.52025	240-285	3345.8-3358	36.43-36.5
12.57675-12.57725	322-335.4	3600-4400	
13.36-13.41			

3.11 Hopping sequence requirement

Limit:

FCC §15.207 (g)

FCC §15.207 (h)

Frequency hopping spread spectrum systems are not required to employ all available hopping channels during each transmission. However, the system, consisting of both the transmitter and the receiver, must be designed to comply with all of the regulations in this section should the transmitter be presented with a continuous data (or information) stream. In addition, a system employing short transmission bursts must comply with the definition of a frequency hopping system and must distribute its transmissions over the minimum number of hopping channels specified in this section.

The incorporation of intelligence within a frequency hopping spread spectrum system that permits the system to recognize other users within the spectrum band so that it individually and independently chooses and adapts its hopsets to avoid hopping on occupied channels is permitted. The coordination of frequency hopping systems in any other manner for the express purpose of avoiding the simultaneous occupancy of individual hopping frequencies by multiple transmitters is not permitted.

Result: Meet the requirements of this chapter

4 Test Setup Photos

Ref “EFGX23060060-IE-01-E02 Setup Photos.pdf”

5 External Photo

Ref “EFGX23060060-IE-01-E02 External Photos.pdf”

6 Internal Photos

Ref “EFGX23060060-IE-01-E02 Internal Photos.pdf”

7 Appendix

Ref “EFGX23060060-IE-01-E02 Appendix.pdf”

-End of report-