kidzOne

www.kidzonetoys.com

kidzOne

Licensed Bentley Bacalar Ride On(12V)

060-ROT-21L

Owner's Manual

*Product appearance and colors may vary from the photo.

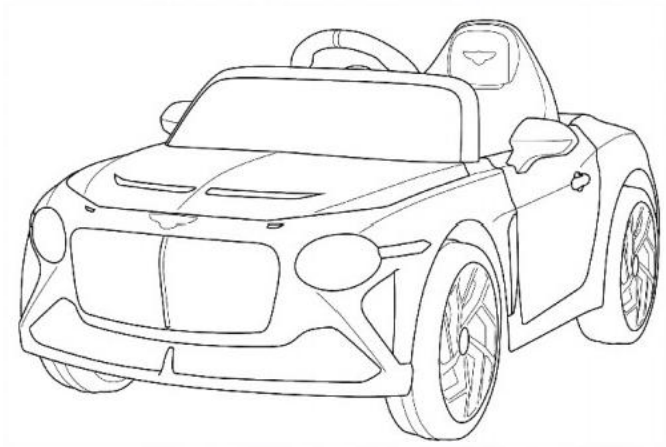

www.kidzonetoys.com

Welcome to Kidzone's world of ride-ons where fun and adventure await! Little ones have a blast riding our toys at home, in the park, or on the sidewalk.

At Kidzone, our goal is to make playtime more fun for kiddos, while ensuring comfort and safety. Our ride-ons help create joyful moments for the entire family that'l turn into forever memories!

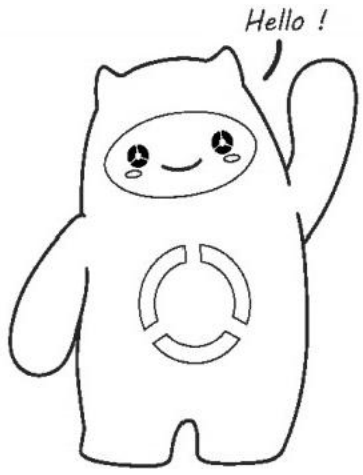

A ATTENTION

This owner's manual contains important safety. performance, and maintenance information

Read the manual before allowing your child to ride on the product.

Keep this manual forfuture reference.

All copyright of this document belongs to KIDZONE.
This document may not be printed, ranslated, reproduced, or distributed in whole or in part without written permission from KIDZONE.

This device complies with part 15 ofthe FCC rules. Operation is subject to the following two conditions:
(1)This device may not cause harmful interference, and
(2) this device must accept any interference received, including interference that may cause undesired operation.

NOTE: This equipment has been tested and found to comply with the limits for a Class B digital device, pursuant to Part 15 of the FCC Rules. These limits are designed to provide reasonable protection against harmful interference in a residential installation. This equipment generates, uses and can radiate radio frequency energy and,if not installed and used in accordance with the instructions, may cause harmful interference to radio communications. However, there is no guarantee that interference will not occur in a particular installation. If this equipment does cause harmful interference to radio or television reception, which can be determined by turning the equipment off and on, the user is encouraged to try to correct the interference by one or more of the following measures:

- Reorient or relocate the receiving antenna.
-Increase the separation between the equipment and receiver.
-Connect the equipment into an outlet on a circuit different from that to which the receiver is connected.
-Consult the dealer or an experienced radio/TV technician for help.

Caution: Changes or modifications not expressly approved by the party responsible for compliance could void the user's authority to operate the equipment.

This Product conforms to toy safety standards CPSIA and ASTM-F963.

Importer:Align Inc.
Importer Address: 19301 EWalnut Dr. N. City of Industry, CA 91748 United States
Importer Tel:1-800-946-6151

Table of Contents

04 Safety Instruction

06 Product Specification

07 Parts and Accessories

0e Assembly Instruction

13 User's Instruction

14 User's Instruction
Media Player

15 User's Instruction
Remote Control

16 User's Instruction
Charging

18 Care and Maintenance

19 Troubleshooting

21 Warrenty Information

Safety Instruction

When using electrical product,basic safety precaution should always be followed including the following:

Failure to follow the safety instructions may resultin property damage,senious injury or death.

⚠ WARNING

DISCLAIMER

- Manufacturer and seller expressly disclaim any and all liability for personal injury.property damage or losses, whether direct,indirect, or incidental,resulting from the incorrect attachment,improper use, inadequate maintenance,unapproved modification,or neglect of this product.

BASIC SAFETY

- **This product is only designed to be used by children age 37-72 months.**
- Do not exceed the maximum weight capacity of 66lb/30kg.

Adult and/or supervisors must instruct the user all common safety rules and safe practice.

This product should be operate on a flat and smooth surface. Do not use this product in any slippery conditions including rain, snow, and ice, or at any potential dangerous places.
To reduce the risk of injury, adult supervision is required. Never use in roadways, near motor vehicdes,

on or near steep inclines or steps, swimming pools or other bodies of water; always wear shoes, and never allow more than 1 rider,

RISK OF FIRE. Do not bypass. Replace only with original size and type.

Do not use this product as a traffic tool.
Never leave children unattended with the ride-on toy. Close supervision is necessary when your **children is using the product.**
If necessary, adult and/or supervisors should be responsible for setting up gate and barriers to ensure

a safe environment for child rider.
Be aware and alert children that hands, legs, hair, clothings, and loose items can potentially get caught in moving parts.Avoid placing body parts on moving parts and do not wear loose clothing while using the ride-on toy.
Avoid using this product in tight environment to prevent damage to the product or injury to the user. This product does not equip with brakes. Do not use this productin areas that requires active braking to prevent possible rolls, crashes, or bodily injury.
Do not use this product in the dark. Only operate this product during daytime orin a well lit area.
Avoid continuously hiting into obstade to prevent overheating or damaging the motor. Drive away or remove obstacle as soon as possible.
For your child's safety, make sure th urely fasten and the rideris wearing persona nt, such operating this product.

Corect Fitting

Make sure the helmet covers your forehead.

Incomect Fitting

Forhead is expased and vulerable to injury.

Limited Term Warranty (One Year from Date of Purchase)

WARRANTY TERMS

KIDZONE warrants that its merchandise are free from manufacturing defects (workmanship and/ or material) and will either give credit or replace defective parts for a period of up to one (1) year from the date of purchase in accordance with the conditions setforth below. Ifamanufacturingdefect is found, KIDZONE should be notified promptly of the defect and supplied a copy of the invaice and deliveryticket. Inspectionbya KIDZONEemployee or representative may be necessary to verify that a manufacturing defect exists, or you may be required to suomit samples to KIDZONE along with a digital image of the defects. If replacement is required in accordance with this warranty and the defective material or merchandise has been discontinued or unavailable, KIDZONE reserves the right to select and supply similar merchandise or offer full credit for the merchandise; otherwise the same material or merchandise will be supplied for replacement purposes. This warranty is made solely to the retailer and is not transferable under any circumstances. It is the retailer's responsiblity to contact KIDZONE with a claim. We will not handie claims from consumers directly; all requests must go through the retailer who sold the merchandise to the consumer. We advise all retailers to retain invoices for a minimum of one (1) year for warranty purposes. This warranty supersedes and replaces all implied warranties of merchantability and use for particular purpose. No representative, employee, agent or any other person is authorized to assume for KIDZONE any adcitional liability or responsibility in connection with KIDZONEs merchandise except as described above. Implied warranties or merchantability and fitness of the merchandise are limited to a period of one (1) year from the date of purchase. In no event shall KIDZONE be liable for indirect, consequential or incidental damages of any kind.

ADDITIONAL CONDITIONS

THE FOLLOWING EXAMPLES ARE NOT MANUFACTURER'S DEFECTS:

- Colors may vary slightly from the photo because of photography and printing tolerances.
- Sizes stated in U.S. standard measurements may vary slightly due to product are manufactured using the metric system.
- No returns for buyer's remorse.
- No returns-other than stated above will be accepted,

ADDITIONAL CONDITIONS

WARRANT IS VOID FOR ANY OF THE FOLLOWING CONDITIONS:

1. Improper maintenance or improper use resulting in damage.
2. Any product modifications by dealer, consumer, or other parties not authorized by KIDZONE wil void this warranty.
3. Floor samples sold or products designated "AS IS" at the time of purchase are not covered by the warranty
4. Warranty does not cover minor variations or differences between floor samples or printed illustrations and your product.
5. Cost of packaging and shipping to and from KIDZONE is not covered by the warranty unless expressly arranged by KIDZONE.
6. This warranty covers only articles of appliances intended for residential use only. does not cover any industrial, commercial, institutional or Rental use.
7. Dissatisfaction due to buyer's remorse.
8. Normal wear and tear.
9. Damages incurred during transportation.
10. Damages incurred during assembling or maintenance.
11. Damage incurred by accidents or abuse.

Troubleshooting

Problem	Possible Reason	Solution
Vehicle needs a push to go forward	Poor wire connection	Check if the battery connectors are firmly connected. Contact Customer service if necessary
	"Dead spot"on motor	Contact customer service
Loud grinding sound or clicking sound from the motor or gear box	Damaged motor or gear box	Contact customer service
Battery does not charge	Disconnected /Badly connected battery	Reconnect the battery
	Disconnected /Badly connected charger	Make sure the charger is firmly plugged into the power source and connected to the charging port
	Chargeris not working	Contact customer service
Vehicle does not stop	Damaged equipment	Contact customer service
Charger feels warm with charging	Normal	N/A

⚠ CAUTION

Failure to follow these instruction may result in permanent damage to the product or parts.

CELL BATTERY AND RECHARGEABLE BATTERY HANDLING

Do not mix old and new batterles.

Do not mix alkaline, standard (carbon-zinc), or re-chargeable batteries.

Permanent damage to the battery may occur if it is completely drained. Do notlet the battery to drain completely.

On average, you will need to charge the battery for 8-12 hours. Do not charge the battery for more than 20 hours. Failure to charge the battery as directed could cause permanent damage to the battery and void the warranty.

Only an adult who has read and underrstands the safety instruction should handle, charge, and recharge the battery.

Disconnect the battery if not used for along period oftime.

⚠ WARNING

Failure to follow these instruction may result in bodily harm, serious injury, or death.

CHOCKING HAZARD,ASSEMBLY WARNING

- This product contains small parts before assembly. Keep children away when assembling the ride-on toy. The assembly should only performed by an adult.

Remove and dispose all protective materials, plastic bag, and packaging before assembly. • This product should not be used by children under the age of 36 months old.

ELECTRIC SHOCK, FIRE HAZARD, FLAMMABLE AND EXPLOSIVE WARNING

- To protect against electrical shock, do not let cord, charger, transformer, battery or the product contact with water or other liquid.

Do not drive the vehicle into any puddle or contact with any liquid to prevent electrical shock.

Do not change, modify, or add any electrical wiring on the product. Alternations could potentially cause shirt circuit, a fire, or irreversible damage to the electrical system.

Only use charger and battery provided or recommended by the manufacturer. Using the wrong type of battery or charger could cause a fire and potentially property damage and serious injury.

Check the battery, charger, and connectors for any sign of excessive wear or damage each time you charge the battery. Do not use the charger orthe battery if damages are present. Change and replace damage part before use.

Do not lift or carry the battery by the wires or charger. You might damage the wires and case electric shock or fire.

- Do not charge more than 20 hours, You might over heat the battery and cause damage ora fire.

CORROSIVE CHEMICAL,PRODUCT MATERIALWARNING

Contact or exposure to battery leakage may cause serious injury. If contant or exposure occurs to the skin or in the eyes, or if the chemical is swallowed, call medical emergencyimmediately.

Battery posts, terminals, and related accessories contain lead and lead compounds which are toxic and corrosive. Never open the battery.

Product Specification

Model no	060-R0T-21L
Battery	12v4.5 Ah
Charger output	12v500 mA
Batter Charge Time	8-12 hours
Speed	1.86-3.11 mph(3-5km/h)
Suitable Age	37-72 months
Maximum User Weight	66 |b/30kg

Troubleshooting

Problem	Possible Reason	Solution
Yehicle does not move	Low Battery	Fully charge the battery
	Fuse Protection	Fuse will reset automatically after turning off for 5-15 seconds
	Disconnected /Badly connected battery	Reconnect the battery
	Failed battery /motor	Contact Customer Service
Vehicle does not run very long	Low Battery	Fully charge the battery
	Old/Damaged Battery	Replace battery if necessary
Vehicle runs veryslow	Low Battery	Fully charge the battery
	Old Battery	Replace battery if necessary
	Vehicle is overloaded	Make sure user's weight is under 66 |b/30 kg
	Vehicle is being used in harsh environment	Avoid using the vehicle in harsh environment

Care and Maintenance

· Check the product regularly and make sure there is no missing or loose parts.Re-tighten any loose parts if necessary.
Make sure there is no cracked or broken plastic parts.
Store the product away from heat source when not using, coverit with a tarp and away from wet weather.
· Tum off the product and disconnect the battery if the product is not use for a long period of time.
· Clean the vehice with a cloth. Use a non-wax furniture polish to restore shine to plastic parts. Do not use abrasive cleaner.
- Do not wash the product with a hose orimmerse any parts in water or other liquid.
Occasionally use lightweight ail to lubricate moving parts.
- Regularly charge the battery to prolong the battery life.
- Do not store the product near heat source, such as stoves and heaters. Plastic parts may melt under high temperature.

Fuse

The battery features a thermal fuse with a rest fuse that will automatically trip and cut off all power to the vehice if the motor,electric system or battery is overloaded. The fuse will reset and power will be restored after the product is turned OFF for 5-15 seconds and then turned ON again. If the thermal fuse trips repeatedly during normal use, the vehicle may need repairing.

To tripping the fuse:

- Do not overload the vehicle.
- Do not tow anything behind the vehicle.
- Do not drive on steep slopes.
- Do not drive into fixed obstacle, which may cause the wheels to spin and overheat the motor.
- Do not operate in hot weather to prevent overheating.
- Do not allow water or other liquids to come in contact with the battery or other electric components.
- Do not tamper with the electric system.

△ WARNING

RISK OF FIRE. Do not bypass the fuse.

Parts and Accessories

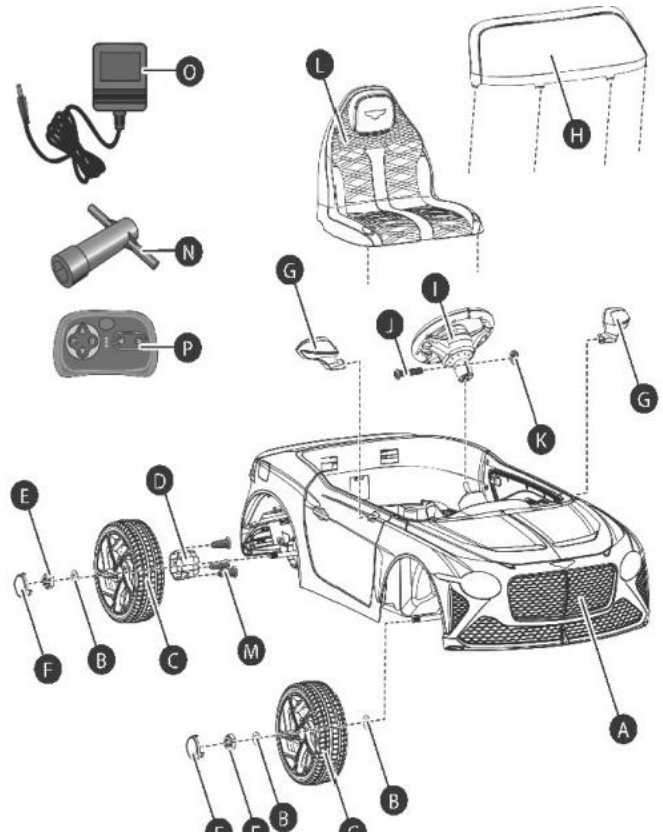

A	Vehicle Body	x1	I	Steering Wheel	x 1
B	@10 Washer	x6	J	M5 x 30 Machine Screw	x 1
C	Wheel	x4	K	05 Nut	x 1
D	Wheel Hub	x2	L	Seat	x 1
E	Lock Nut	x4	M	四4x16 Screw	x 6
F	Hubcap	x4	N	Spanner	x

Assembly Instruction

⚠ WARNING

This product should only be assembled by an adult.
Children can be harmed by small parts, sharp edges and points or by electrical items. Care should be taken when unpacking and assembling the vehicle.

Tools required (not included)

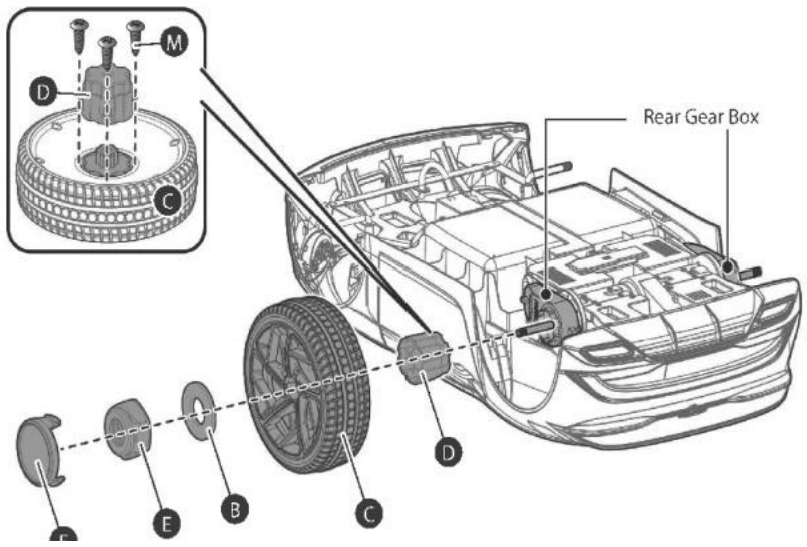

Attach wheel hub (D) to the wheel (C).Then attach and tighten 3 ⑩4x16 screws (M) to secure the wheel hub in place.

Align the wheel with the wheel hub to the rear gear box.

- Slide the rear wheel onto the rear axle, follow by a O10 washer(B) and secure using a lock nut (E).
- Put on the hubcap on the wheel.
- Repeat the same step for the other side of the vehicle.

User Instruction (Charging)

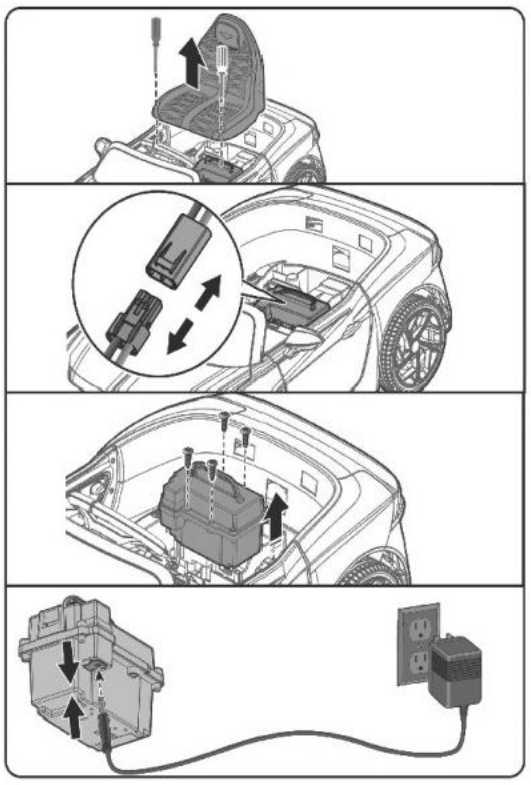

Charging the battery directly (Option 2)

1. Remove the seat from the vehicle
2. Disconnect the battery from the vehicle
3. Loosen the screws and remove the battery from the vehicle.
4. Connect the charger to the battery and then plug the charger into a wall outlet. The battery will start charging

A WARNING

Old battery or battery waste must be taken to hazardous waste disposal facility, waste handler, or an authorized recycling facility.
DO NOT dispose battery as regular household waste.

User Instruction (Charging)

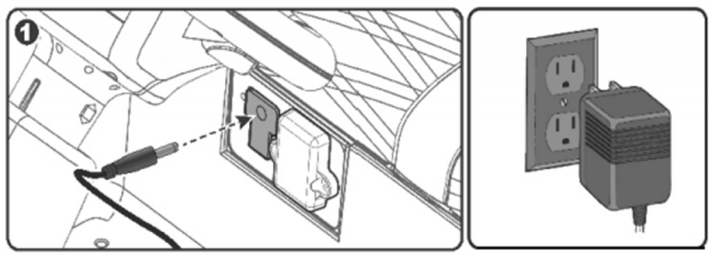

A WARNING

The battery should only be charged by an adult.

Charging the battery via charging port (Option 1)

1. Connect the charger to the charging port.
2. Plug the charger into a wall outlet. The battery will start charging.

- The vehicle must be OFF when charging.
- The indicator on charger turn red when charging, and turn green after charging completed.
- Recharge the battery if the vehicle operates slowly.
- The charging protection will cut off all functions of the vehicle when charging.

NOTE:
- Damage to the battery may occur ifit is completely drained.
- Charge the battery for about 8-12 hours.
- Do not charge the battery for more than 20 hours.
- **Charge the battery at least once a month even if not operating the vehicle for a long time to maximize the batterylife.**
  Do not charge or store the battery upside down.
- Keep the charger and battery away from flames, sparks, or any flammables.

Assembly Instruction

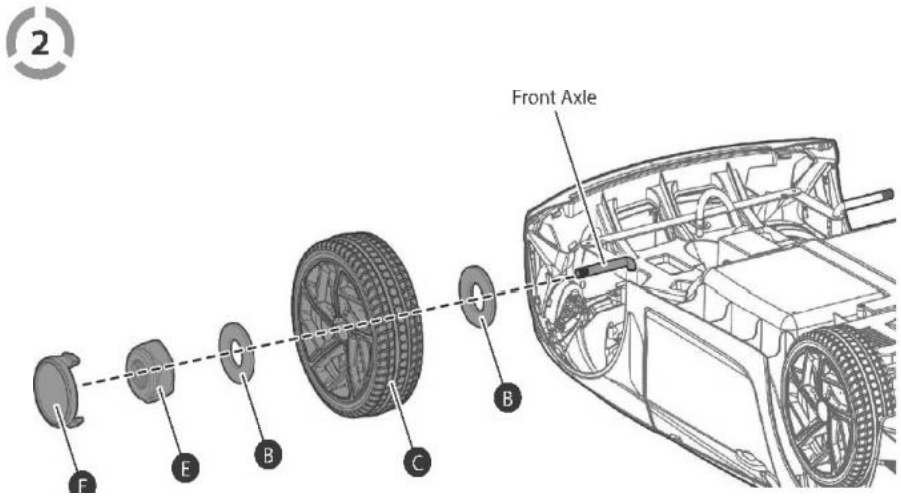

i

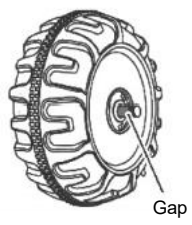

Check the gap between the wheel and the axle after assembling. Make sure the wheel can rotate smootly but not too loose from the axle. Add or remove washers to ensure
smooth and secure operation.

- Slide a@10 washer(B)onto the front axle, follow by a wheel (Q) and another a 10 washer (B).
- Secure the wheel to the front axle with alock nut (E).
- Put on the hubcap (F) on the wheel.
- Repeat the same step for the other side of the vehicle.

Assembly Instruction

3

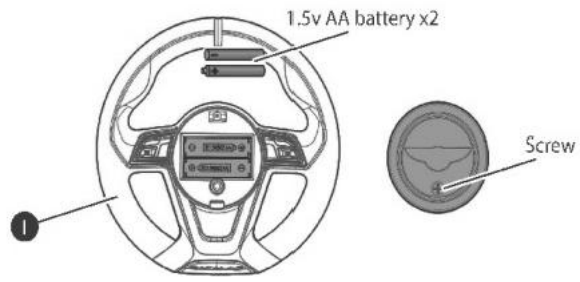

- Remove the battery cover from the steering wheel (A) by lossening the screw.
- Insert21.5v AA batteries into the steering wheel in correct polarity.
- Place the cover back on the steering wheel and tighten the screw.

A WARNING

The battery should only be changed by an adult.

Do not mix old and new batteries.
Do not mix alkaline, standard (carbon-zinc), or re-chargeable batteries.

4

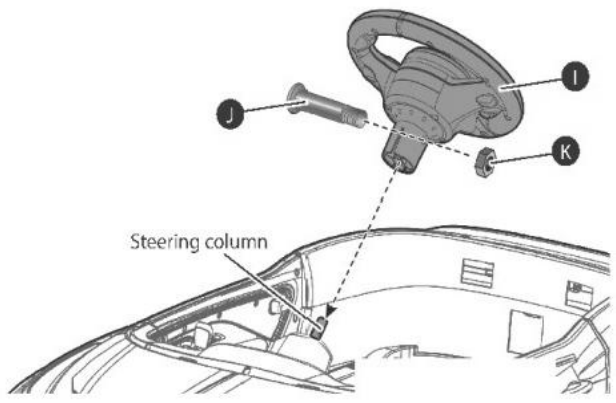

- Remove the M5x30 machine screw (J) and05 nut (K) from the steering wheel(1).
- Place the steering wheel over the steering column.
  Align the holes on the steering wheel to the that of the steering column.
  Secure the steering wheel by inserting the M5x30 machine screw and tighten the 05 nut through the steering column.

User Instruction(Remote Control)

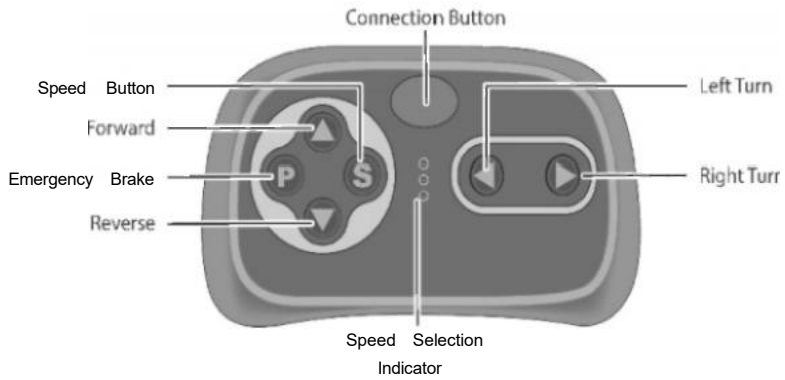

Using the remote control
The remote control should only be used by an adult.

Changing the remote cantrol battery
The remote control requires 2 AAA 1.5v batteries.(not included)

- Remove the cover on the back side of the remote control.
- Replace old batteries with 2 new AAA 1.5v batteries in correct polarity.
  Put the cover back in place.

A WARNING

The battery should only be changed by an adult.

Do not mix old and new batteries.
Do not mix alkaline, standard (carbon-zinc), or re-chargeable batteries.

Pairing the remote control
The remote control needs pairing for the first time usage or after replacing the battery.

- Press the connection button for 3 seconds, the indicator will flashes.
- Tum on the power of the vehicle, the indicator should change to solid light.

If failed to pair, remove and replace the battery from the remote control and repeat the pairing steps.

Control the Vehicle
- Press the R/C-Pedal switch on the vehicle and choose remote control as the prefered input.
- Press the directional buttons to move the vehicle.
- Press the"P"button to enable emergency brake.All running function will be disabled once the button is pressed. Press the"P"button again to enable other functions.
- Press the"S"button to switch between high and low speed

NOTE:
The remote control goes into power saving mode if not used after 10 seconds.
will

User's Instruction (Media Player)

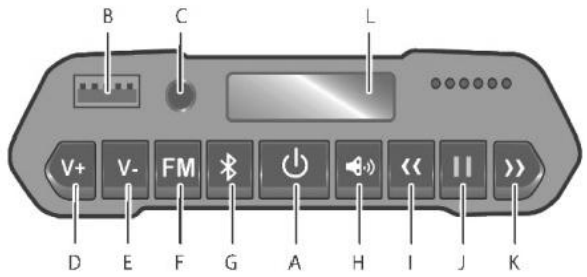

Media Player

A.Player Power Button
Press the player power button to turn ON or OFF the media player.

B.Flash driver port
Allow media playerto play MP3 format fles from yourflash driver device. It doesn't work wellif the memory storage capacity offash driver exceed 64 GB.

C.3.5mm AUX Port
Allow media player to play MP3 format files from your device connected via AUX cable.

D.Increase Volume

E. Decrease Volume

F. FM Button
Press the FM button to play FM radio on the media player.

G.Bluetooth

H.Horn Button

I. Previous Track

J.Play /Pause

K.Next Track

L.Digital Voltmeter
The display will show your battery power. The battery need to be recharged when the value is under 12.5v.

Assembly Instruction

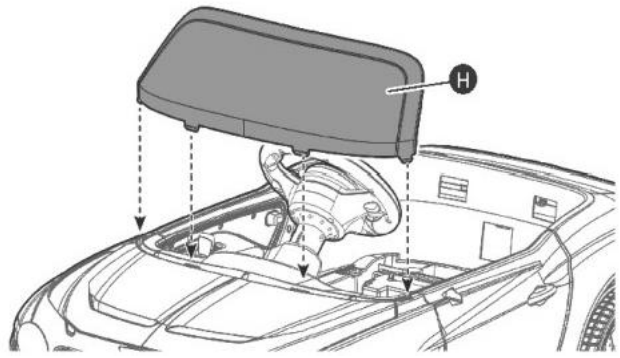

Attach the windshield (H) to the vehicle by fitting the tabs into the grooves until it'clicks"in place.

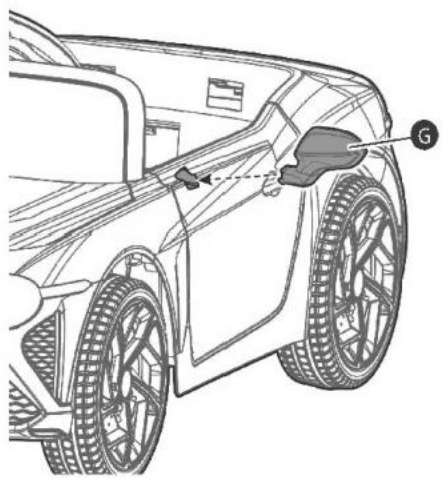

- Attach side mirror (G) to the side of the vehicle.
- Repeat the same step for the other side.

7

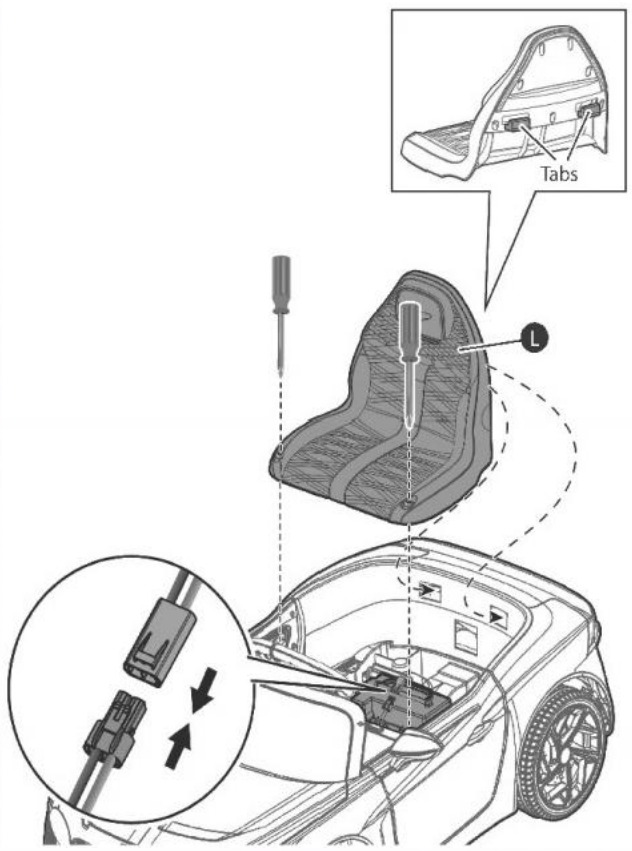

- Connect the battery to the vehice.
- Attach the seat (L) to the vehicle.
- Fit the tabs on the back of the seat into the grooves on the rear of the vehicle, then tighten the screws.

ATTENTION

This product is packed with the battery disconnected.
Connect the battery before use.

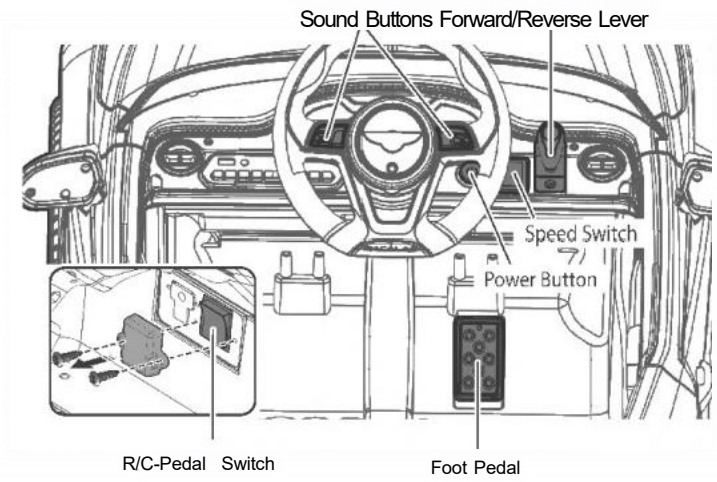

Control the vehicle

Power Button
Press the power button to turn ON or OFF the vehicle.

Speed Button
Press the speed button to switch between high and low speed.

Forward /Reverse Lever
Push the lever to the up position to move forward
Pull the lever to the down position to move in reverse.

Foot Pedal
Press down to move the vehicle, release to slow and stop.

Sound Buttons
Press the sound button for pre-programed sounds.

R/C-Pedal Switch
Press the switch to select operation input from remote control or foot pedal.

A CAUTION

Do not change direction until the vehicle comes to a complete stop.
Sudden change in direction may result in permanent damage to the motor.