MINI Concept Aceman

BATTERY POWERED RIDE-ON

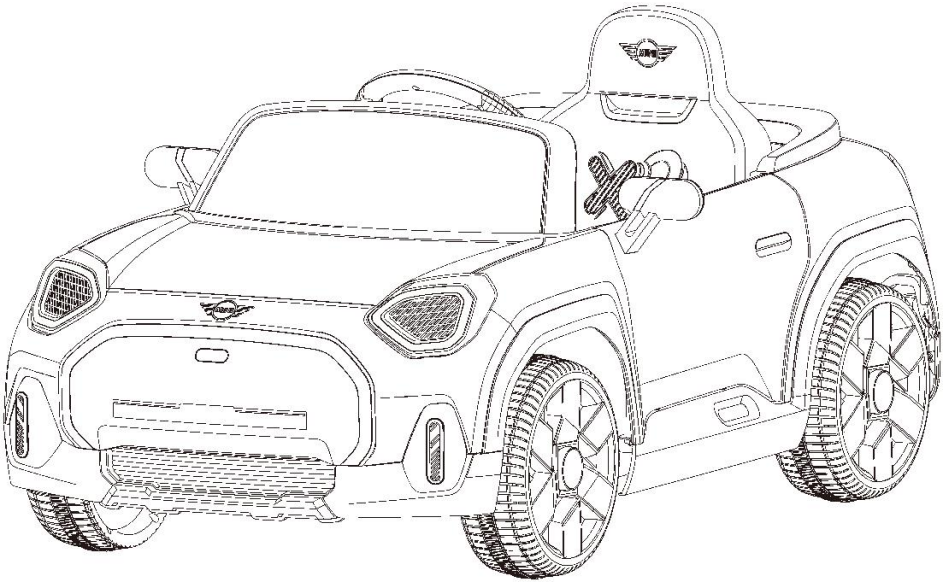

Owner's Manual

with Assembly Instructions

Styles and colo(u)rs may vary.
Made in China.

The owner's manual contains important safety information as well as assembly, use and maintenance instructions.
The Ride-on Car must be assembled by an adult who has read and understands the instructions in this manual.
Keep the package away from children and dispose of properly before use.
Keep this manual for future reference.

On the purchase of your new Ride-On.

This ride-on will provide your child with many miles of riding enjoyment. To help ensure a safe ride we ask you to please read this manual carefully, and keep it for future reference.

Please follow the recommendations in this manual, they are designed to improve the safety and operation of your ride-on car and it's rider.

MINI Concept Aceman Children Electric Ride-On manufactured by Zhejiang Jiajia Ride-On Co., Ltd. (Add: Xincang Industrial Zone, Pinghu City, Zhejiang Province, P.R.China). The MINI logo and the MINI word mark are trademarks of BMW AG and are used under license.

SPECIFICATIONS:

Battery	6V4AH *1 or 6V7AH *1	12V4.5AH *1 or 12V7AH
Charger	6V500mA or 6V1000mA	12V500mA or 12V1000mA

Suitable age:	37-96 months
Load Capacity:	Under 30kg
Speed:	3-5km/h
Size of ride-on car:	108 X 62 X 47 CM
Power way:	Charging type
Charge time:	8-12 hours

⚠ WARNING!

- CHOKING HAZARD - Small parts. Not suitable for children under 36 months. The product contains small parts, keep children away when assembling.
- ADULT ASSEMBLY REQUIRED.
- Always remove protective material and poly bags and dispose before assembly.
- Protective equipment should be worn. Always wear shoes and sit in the seat when operating the vehicle.
- Only drive on level ground. Never use on the lawn.
- Keep your hands, hair, and clothes away from moving parts.
- Never leave child unattended. Direct adult supervision is required. Always keep child in view when child is in vehicle.
- To reduce the risk of injury, adult supervision is required. Never use in roadways, near motor vehicles, on or near steep inclines or steps, swimming pools or other bodies of water, always wear shoes, and never allow more than 1 rider.
- Never use in unsafe conditions such as snow, rain, loose dirt, mud, sand, or gravel, otherwise may result in an unexpected accident such as tipping over, and could damage the electrical system or battery
- Not to be used in traffic.
- This toy should be used with caution since skill is required to avoid falls or collisions causing injury to the user or third parties.
- This toy is unsuitable for children under 36 months due to its maximum speed; Maximum user weight is 30kg.
- This toy has no brake.

⚠ BATTERY INFORMATION

- Non-rechargeable batteries are not to be recharged.
- Rechargeable batteries are to be removed from the toy before being charged.
- Rechargeable batteries are only to be charged under adult supervision.
- Different types of batteries or new and used batteries are not to be mixed.
- Batteries are to be inserted with the correct polarity.
- Exhausted batteries are to be removed from the toy.
- The supply terminals are not to be short-circuited.

⚠ WARNING!

The remote control is not a toy, and is only allowed to be operated by adults.

Parts Diagram | 3

HINT: Some parts shown are assembled on both sides of vehicle

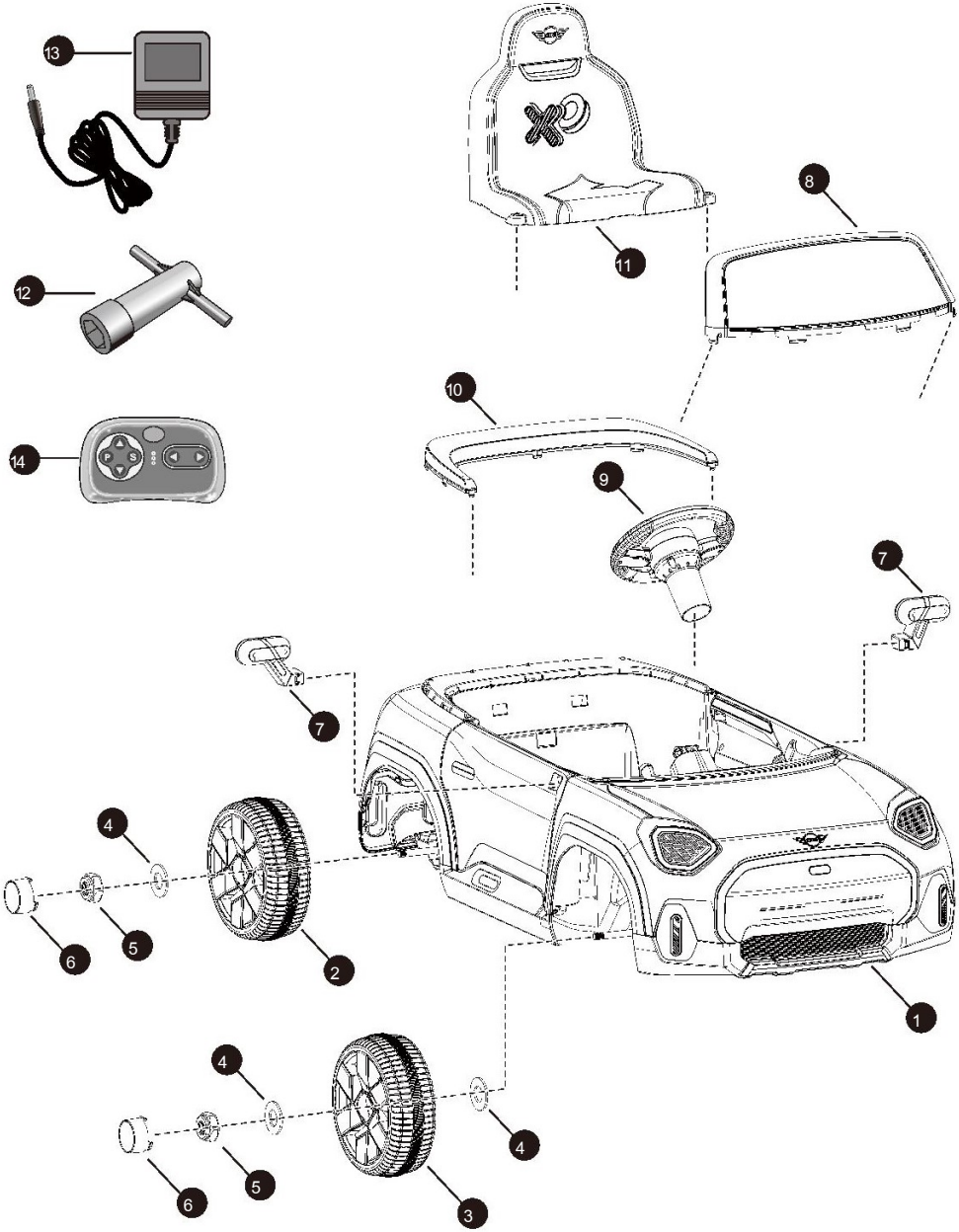

Parts List | 4

PART NO.	PART NAME	Q'ty (pcs)			REMARKS
		1WD	WD	VD	
1	Vehicle body	1	1	1	
2	Driving wheel	1	2	2	
3	Normal Wheel	3	2	2	
4	Ø10 washer	7	6	4	Placed on the front and rear axles
5	Lock nut	4	4	4	Placed on the front and rear axles
6	Hubcap	4	4	4	
7	Side mirror	2	2	2	Left and right
8	Windshield	1	1	1	
9	Steering wheel	1	1	1	
10	Roll cage	1	1	1	
11	Seat	1	1	1	
12	Spanner	1	1	1	Placed in the assembly package
13	Charger	1	1	1	
14	Remote controller	1	1	1	For R/C type only

Assembly tools required (not included):

Screwdriver

1WD (Single Wheel Drive)- Attach the Rear Wheels | 5a

HINT: If your product is Dual Wheel Drive or All Wheel Dirve, please refer to the nex page to attach the rear wheels.

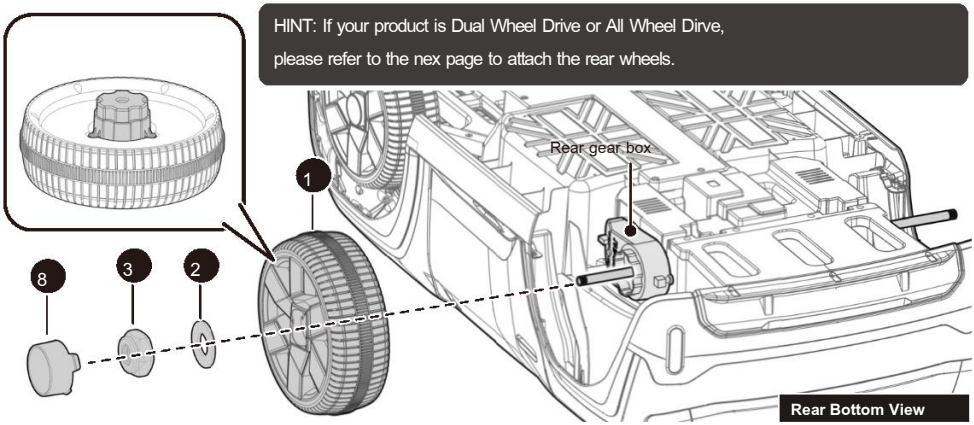

Remove all the parts from the rear axle.

1. Slide the wheel onto the rear axle (Left Side). Keep the wheel driver match up with the gear box on the rear axle.
2. Slide a Ø10 washer onto the rear axle.
3. Tighten a lock nut to the end of the rear axle with a spanner.

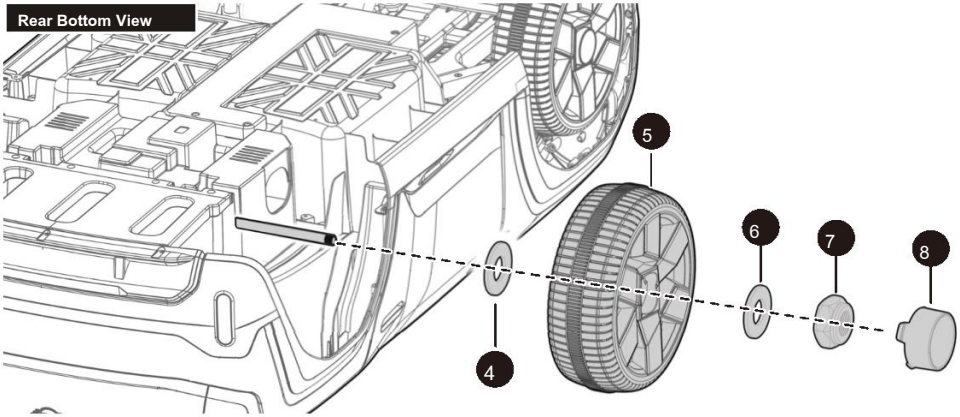

4. Slide the Ø10 washer onto the rear axle (Right Side).
5. Slide the wheel onto the rear axle.
6. Slide the Ø10 washer onto the rear axle.
7. Tighten a lock nut to the end of the rear axle with a spanner.
8. Fit the hub caps to the wheels.

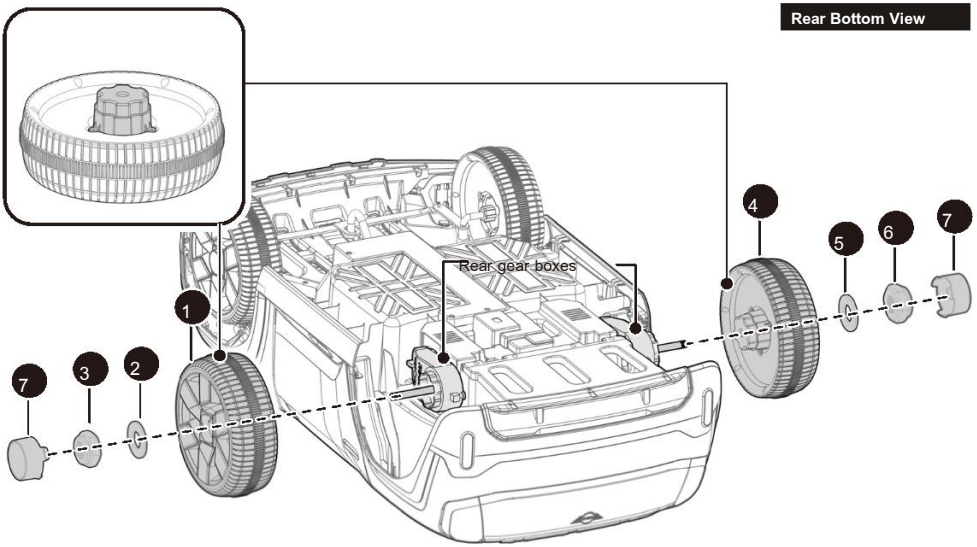

Remove all the parts from the rear axle.

1. Slide the wheel onto the rear axle. Keep the wheel driver match up with the gear box on the rear axle.

2. Slide a Ø10 washer onto the rear axle.

3. Tighten a lock nut to the end of the rear axle with a spanner.

4-6. Repeat above steps to assemble the other Rear Wheel.

HINT: An extra spanner has been provided to hold the Lock Nut on the other side of the rear axle while tightening the Lock Nut on the other side.

7. Fit the hub caps to the wheels.

Attach the Front Wheels | 6

1WD WD

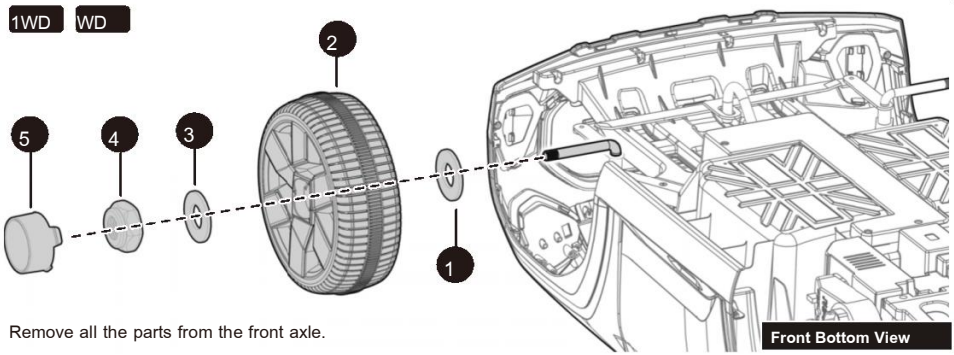

Remove all the parts from the front axle.

1. Slide a Ø10 washer onto the front axle.

2. Slide a wheel onto the front alxe.

3. Slide a Ø10 washer onto the front axle.

4. Tighten a lock nut to the end of the front axle with a spanner. DO NOT over tighten.

5. “Snap” the hubcap to the wheel.

Repeat the above procedure to assemble the other Front Wheel.

4WD

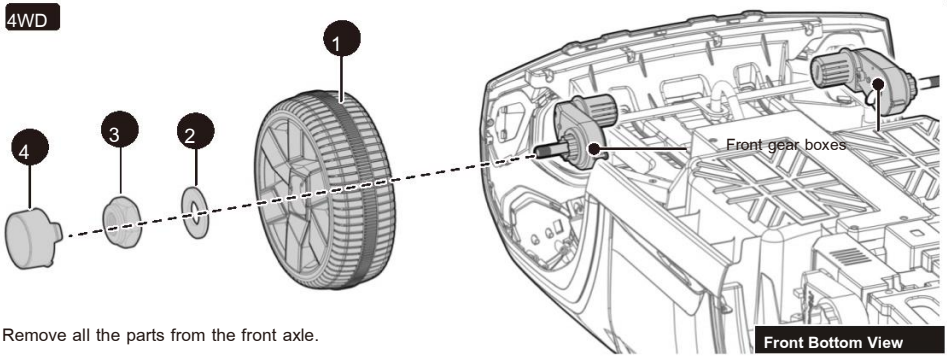

Remove all the parts from the front axle.

1. Slide a wheel onto the front alxe. Keep the driver on the wheel match up with the gear box on the rear axle.

2. Slide a Ø10 washer onto the front axle.

3. Tighten a lock nut to the end of the front axle with a spanner. DO NOT over tighten.

4. “Snap” the hubcap to the wheel.

Repeat the above procedure to assemble the other Front Wheel.

Please follow the steps 1-4 to add the batteries (Not Included), and refer to the battery information on page 2.

1. With a screwdriver loosen the screw on the battery cover located in the center of the steering wheel.
2. Remove the battery cover from the top of the battery compartment.
3. Insert 2x1.5 AA batteries in their correct polarities.
4. Place the battery cover over the battery compartment and fasten with the screw you loosened in step one.

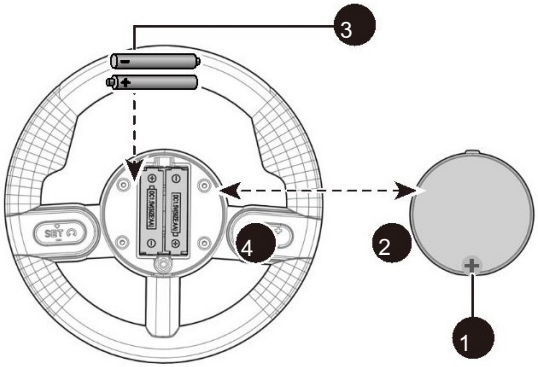

Attach the Steering Wheel

5. Insert the steering wheel to the steering wheel linkage, push until you hear it “click” into place.
   HINT: There is an unlock button under the steering wheel, pressing and holding the unlock button can remove the steering wheel easily .

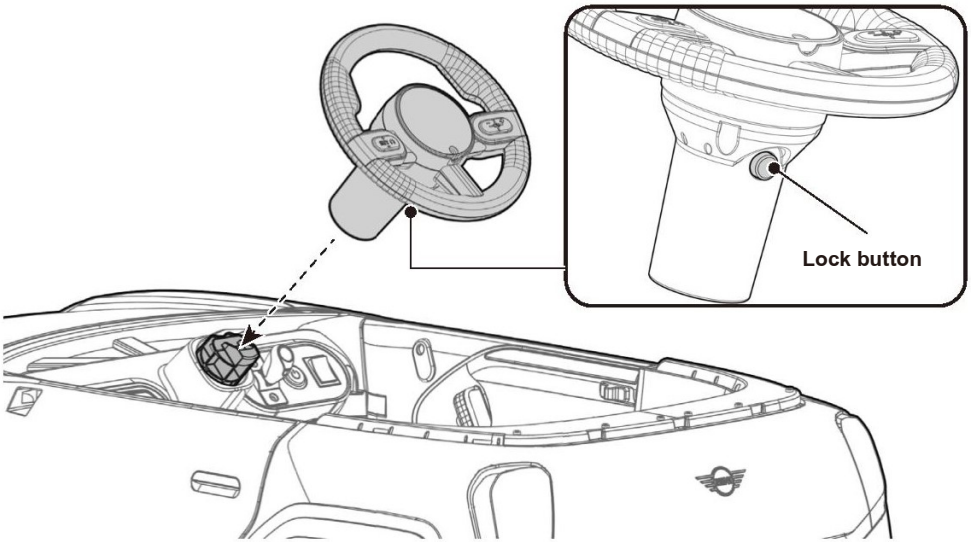

Attach the Windshield , Side Mirrors & Roll Cage | 8

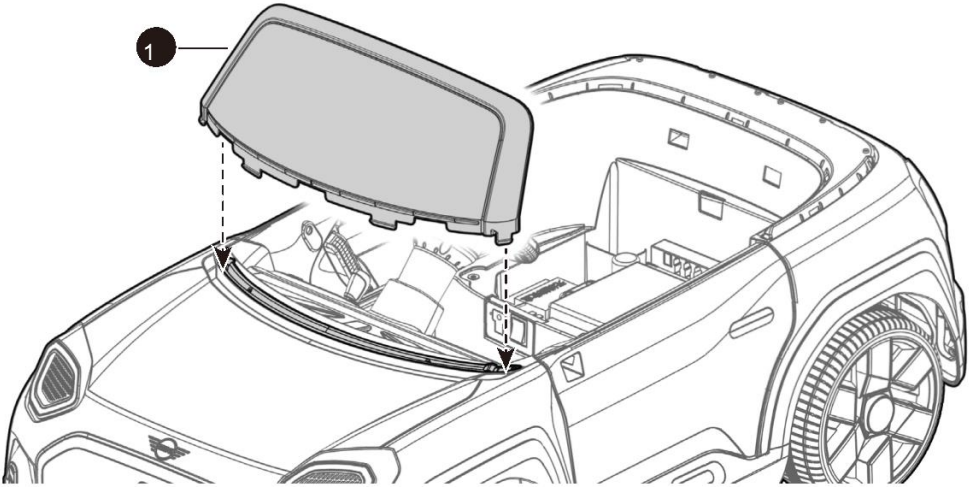

1. Fit the tabs windshield into the grooves on the vehicle. Press until you hear it “click” into place.
2. Fit the side mirrors to the holes on the both doors, push until you hear them “click” into place. Repeat for the other side.
3. Fit the seat roll cage to the vehicle body, press it until you hear it “click” into place.

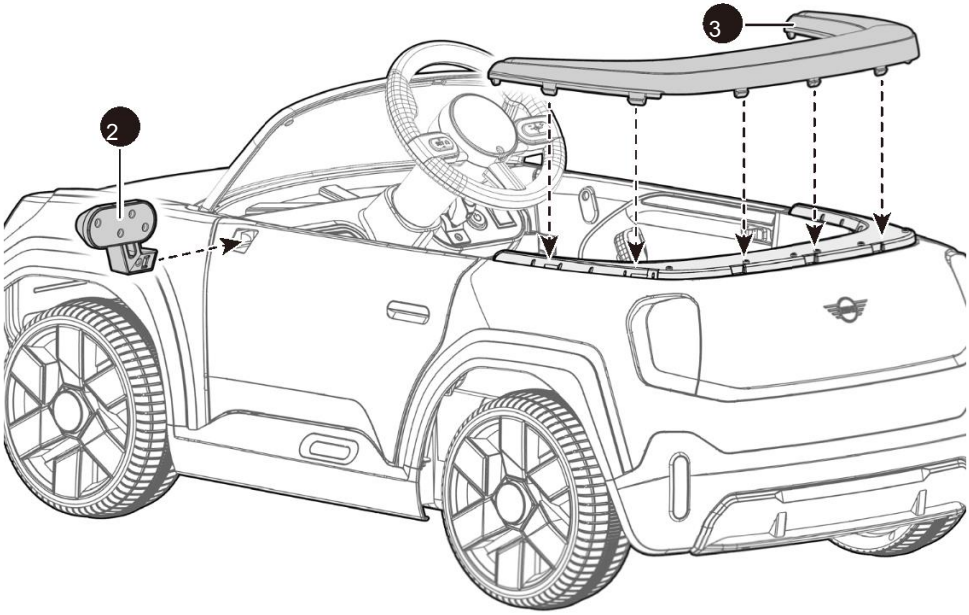

1. Plug the vehicle connector into the connector on the battery.
2. Fit the tabs on the seat back into the grooves on the rear of the vehicle.
3. With a screwdriver tighten the M5x16 screws on the top of the seat into the holes in the vehicle.

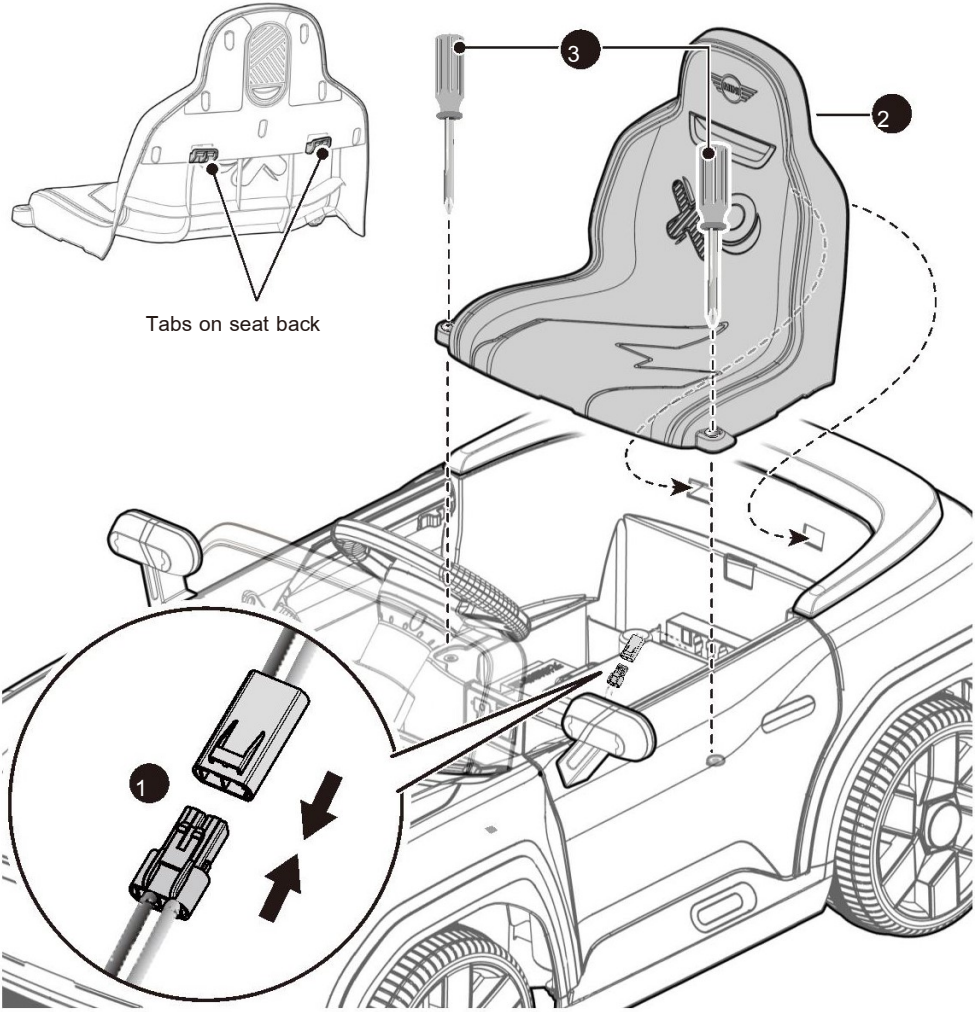

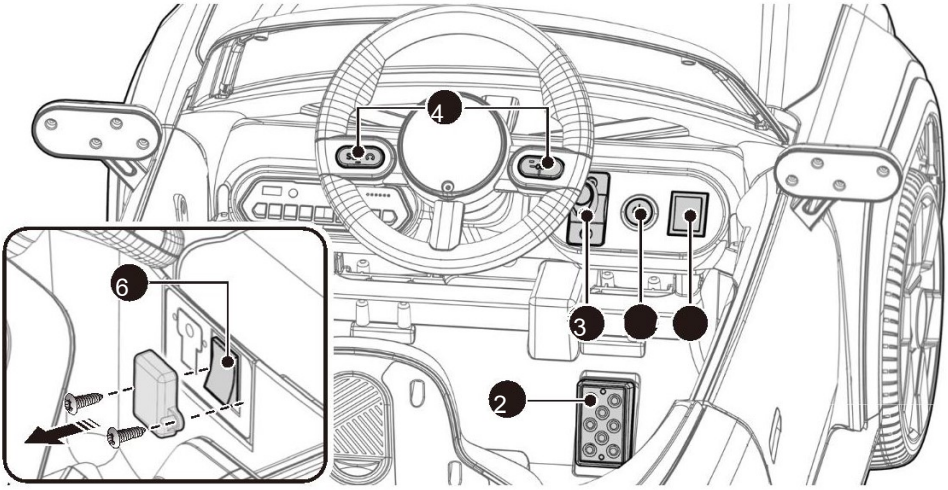

1. Power button: Turns the product on and off.

2. Foot pedal: Applies power (speed) to the product.

- To move the product, press the pedal down.
- To brake or slow down, release pressure from the pedal.

3. Forward/reverse level: Changes the direction that product moves from forward to reverse.

- To move the product forward, shift the lever to top position.
- To move the product backward, shift the lever to down position.

4. Sound buttons: Press for sound playing.

5. High/Low speed switch (if equipped):

Operates the product to move forward in high speed and low speed.

6. R/C - PEDAL Switch: (if equipped. Need to open the protective cover first):

Operates the product control by remote control or foot pedal.

⚠ IMPORTANT

- **Always stop vehicle when changing the speed or direction to avoid damage the gears and motor.**
- **HIGH SPEED (If equipped): Make sure your child knows how to steer, how to start and stop the product and knows the rules for safe driving.**

⚠ WARNING!

- ONLY an adult is allowed charge and recharge the battery!
- This product with Charging Protection: when charging, all functions will be cut off.

- The POWER SWITCH must be turned in OFF position when charging.
- Before the first use, you should charge the battery for 4-6 hours. Do not recharge the battery for more than 10 hours to avoid overheating the charger.
- When the vehicle begins to run slowly, recharge the battery.
- After each use or once a month minimum recharge time as 8 to 12 hours, less than 20 hours at most.
- Use only battery(ies) and charger specified by the manufacturer. Using another battery or charger may cause a fire or explosion. Do not use the battery or charger for any other product.
- If your ride-on with a Digital voltmeter(IF EQUIPPED), the magnitude of voltage will tell you how much power is remaining in the battery when you must recharge the battery. Make sure the vehicle is stop!

6V product	less than 6.2V	The battery needs to be charge.
12V product	less than 12.5V	

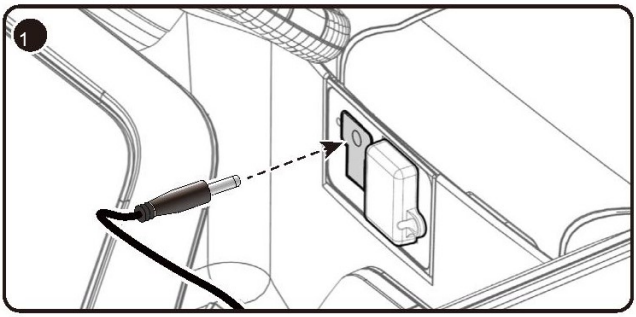

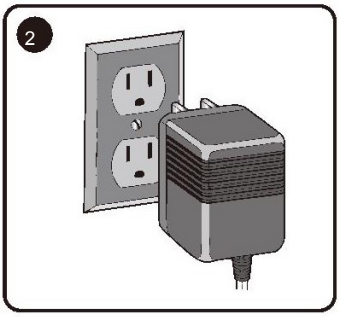

1. Plug the charger port into the input socket (the socket is below the seat).
2. Plug the charger plug into a wall outlet. The battery will begin charging.

Battery Disposal

The battery will eventually lose the ability to hold a charge. Depending on the amount of use, and varying conditions, the battery should operate for one to three years.

Important! Recycle the dead battery responsibly. The battery contains lead acid (electrolyte) and must be disposed of properly and legally. It is illegal in most areas to incinerate lead acid batteries or dispose of them in landfills. Take it to a federal or state-approved lead acid battery recycler, such as local automotive battery retailer.

Do not throw the battery away with your regular household waste!

Troubleshooting Guide | 14

Problem	Possible Cause	Solution
Vehicle does not run	Battery low on power	Recharge battery.
	Thermal fuse has tripped	Reset fuse, see <Fuse>
	Battery connector or wires are loose	Check that the battery connectors are firmly plugged into each other. If wires are loose around the motor contact your distributor please.
	Battery is dead	Replace battery, contact your distributor please.
	Electrical system is damaged	Contact your distributor please.
	Motor is damaged	Contact your distributor please.
Vehicle does not run very long	Battery is under charged	Check that the battery connectors are firmly plugged into each other when recharging
	Battery is old	Replace battery, contact your distributor please.
Vehicle runs sluggishly	Battery low on power	Recharge battery, contact your distributor please.
	Battery is old	Replace battery, contact your distributor please.
	Vehicle is overload	Reduce weight on vehicle.
	Vehicle is being used in harsh conditions	Avoid using vehicle in harsh conditions, see <User Notice>.
Vehicle needs a push to go forward	Poor contact of wires or connectors	Check that the battery connectors are firmly plugged into each other. If wires are loose around the motor, contact your distributor please.
	“Dead Spot” on motor	A dead spot means the electric power is not being delivered to the terminal connection and the vehicle needs repair. Contact your distributor please.
Difficult shifting from forward to reverse or vice-versa	Attempting to shift while the vehicle is motion	Completely stop the vehicle and shift, see <Use Your Ride-On>
Loud grinding or clicking noises coming from motor or gear box	Motor or gears are damaged	Contact your distributor please.
Battery will not recharge	Battery connector or adapter connector is loose	Check that the battery connectors are firmly plugged into each other.
	Charger not plugged in	Check that the battery charger is plugged into a working wall outlet.
	Charger is not working	Contact your distributor please.
Charger feels warm when recharging	This is normal and not a cause for concern	

Completely read through this manual and the troubleshooting guide table before calling. If you still need help resolving the problem Contact your distributor please.

- It is parents' responsibility to check main parts of the toy before using, Must regularly examine for potential hazard, such as the battery, charge, cable or cord, plug, screws are fastening enclosure of other parts and that in the event of such damage, the toy must not be used until that damage had been properly removed.
- Park the vehicle indoors or cover it with a tarp to protect it from wet weather.
- Recharge the battery after each use. Only an adult can handle the battery. Recharge the battery at least once a month when the vehicle raider is not being used.
- Do not wash the vehicle with a hose. Do not wash the vehicle with soap and water. Do not drive the vehicle in rainy or snowy weather. Water will damage the motor, electric system and battery.
- Clean the vehicle with a soft, dry cloth. To restore shine to plastic parts, use a non-wax furniture polish. Do not use car wax. Do not use abrasive cleaners.
- When not using, all the electrical source should be turn off. Turn off the power switch and disconnect the battery connection.

Fuse

The battery features a thermal fuse with a rest fuse that will automatically trip and cut all power to the vehicle if the motor, electric system or battery is overloaded. The fuse will reset and power will be restored after the unit is turned OFF for 20 seconds and then turned ON again. If the thermal fuse trips repeatedly during normal use, the vehicle may need repair. Contact your distributor please.

To avoid losing power, follow these guidelines:

- Do not overload the vehicle.
- Do not tow anything behind the vehicle.
- Do not drive up steep slopes.
- Do not drive into fixed objects, which may cause the wheels to spin, causing the motor to overheat.
- Do not drive in very hot weather, components may overheat.
- Do not allow water or other liquids to come in contact with the battery or other electric components.
- Do not tamper with the electric system. Doing so may create a short, causing the fuse to trip.

RISK OF FIRE. Do not bypass. Replace only with a new fuse.

Our products are suitable for

ASTM F963; GB6675; EN71 and EN62115 standard.

⚠ FCC warning

This device complies with part 15 of the FCC Rules. Operation is subject to the following two conditions: (1) This device may not cause harmful interference, and (2) this device must accept any interference received, including interference that may cause undesired operation.

NOTE: This equipment has been tested and found to comply with the limits for a Class B digital device, pursuant to Part 15 of the FCC Rules. These limits are designed to provide reasonable protection against harmful interference in a residential installation. This equipment generates, uses and can radiate radio frequency energy and, if not installed and used in accordance with the instructions, may cause harmful interference to radio communications. However, there is no guarantee that interference will not occur in a particular installation. If this equipment does cause harmful interference to radio or television reception, which can be determined by turning the equipment off and on, the user is encouraged to try to correct the interference by one or more of the following
measures:

-- Reorient or relocate the receiving antenna.

-- Increase the separation between the equipment and receiver.

-- Connect the equipment into an outlet on a circuit different from that to which the receiver is connected.

-- Consult the dealer or an experienced radio/TV technician for help.

Changes or modifications not expressly approved by the party responsible for compliance could void the user's authority to operate the equipment.
The distance between user and products should be no less than 20cm.