BL-M8821CS1

802.11ac 433Mbps WLAN + BT v4.2 Combo SDIO Module Specification

SHENZHEN BILIAN ELECTRONIC CO., LTD

Add: 10~11/F, Building 1A, Huaqiang idea park, Guangming district, Shenzhen. Guangdong, China

Web: www.b-link.net.cn

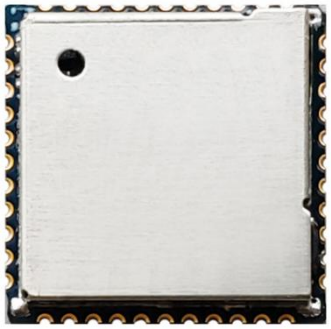

(Top View)

(Bottom View)

Module Name: BL-M8821CS1	
Module Type: 802.11a/b/g/n/ac 433Mbps WLAN + BT v4.2 Combo SDIO Module	
Revision: V1.0	
Customer Approval:	
Company:	
Title:	
Signature:	Date:
LB-link Approval:	
Title:	
Signature:	Date:

Revision History

Revision	Summary	Release Date	Revised By
0.1	Initial release	2020-01-16	
1.0	Official release	2023-03-21	Update the specification version

1. Introduction

BL-M8821CS1 is a highly integrated Dual-band WLAN + Bluetooth v4.2 Combo module. It compatible IEEE802.11a/b/g/n/ac standard and provides the maximum PHY rate up to 433.3Mbps, and supports Bluetooth dual mode with BT v4.2/4.0/2.1 compliant, offering feature-rich wireless connectivity at high standards, and delivering reliable, cost-effective, high throughput from an extended distance.

1.1 Features

- Operating Frequencies: 2.4~2.4835GHz or 5.15~5.85GHz
- Host Interface is SDIO and UART
- IEEE Standards: IEEE 802.11a/b/g/n/ac, wireless PHY rate can reach up to 433Mbps
- Support Bluetooth v4.2/4.0/2.1 with Simultaneous LE and BR / EDR
- Connect to external antenna through half hole

Power Supply: DC3.3V for main power, DC3.3V or 1.8V for I/O power

1.2 Block Diagram

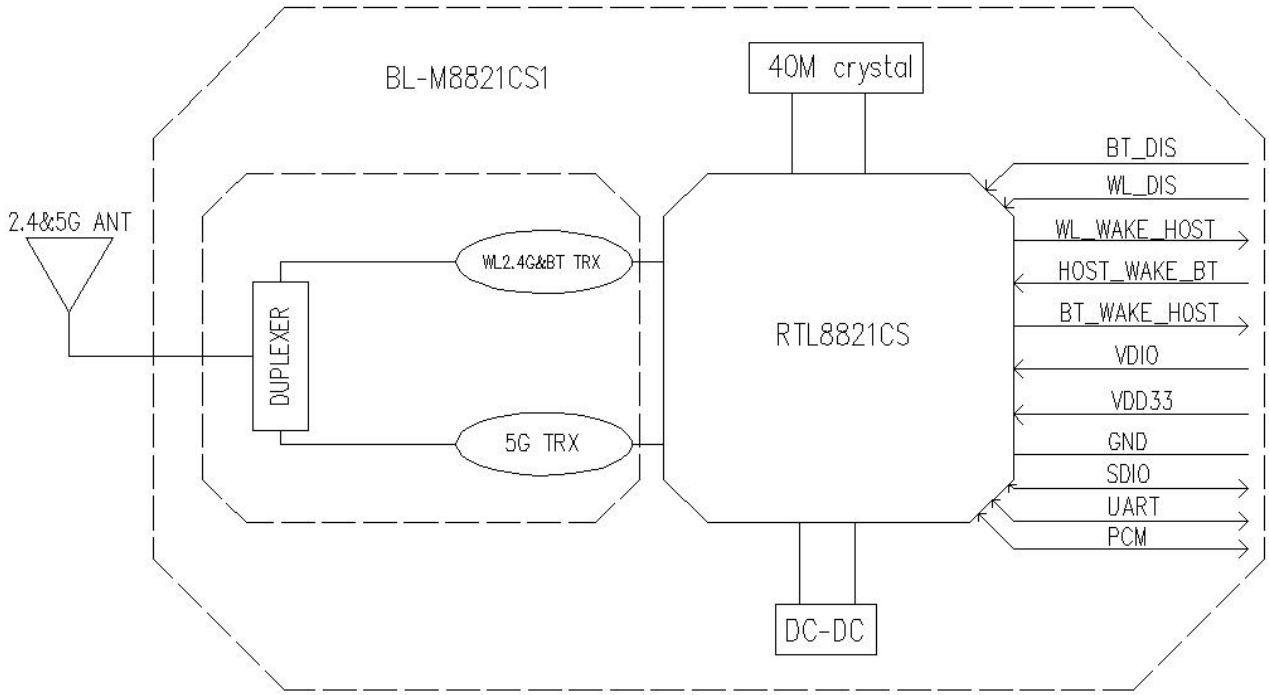

1.3 General Specifications

Module Name	BL-M8821CS1 WLAN + BT4.2 SDIO Module
Chipset	RTL8821CS-CG
WLAN Standard	IEEE802.11a/b/g/n/ac
BT Specification	Bluetooth Core Specification v4.2/4.0/2.1
Host Interface	SDIO3.0/SDIO2.0 for WLAN & UART for Bluetooth
Antenna	Connect to the external antenna through half hole
Dimension	12.0*12.0*2.4mm (L*W*H)
Power Supply	3.3V±0.2V main power supply @500 mA (Max) 3.3V±0.2V or 1.8V±0.1V I/O power supply
Operation Temperature	-20℃ to +70℃
Operation Humidity	10% to 95% RH (Non-Condensing)

2. Pin Assignments

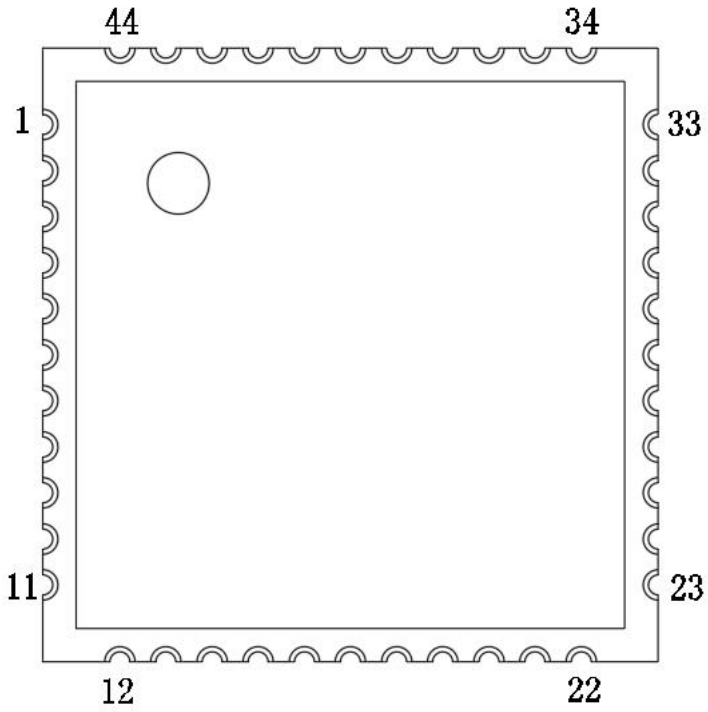

(Top View)

2.1 Pin Definition

No	Pin Name	Type	I/O Level	Description
1	GND	RF		RF Ground
2	WLAN/BT_ANT	RF		WLAN/BT_ANT
3	GND	RF		RF Ground
4	NC	--		NC
5	NC	--		NC
6	HOST_WAKE_BT	I/O	VDIO	Function1. General Purpose Input / Output Pin GPIO13 Function2. Host to wake-up this Bluetooth device input
7	BT_HOST_WAKE	I/O	VDIO	Function1. General Purpose Input / Output Pin GPIO14 Function2. Bluetooth device to wake-up HOST
8	NC	--		NC
9	VDD33	P		3.3V Main Power Supply
10	NC	--		NC
11	NC	--		NC
12	WL_DIS#	I/O	VDIO	Shared with GPIO9, This Pin Can Externally Shutdown the RTL8821CS WLAN function when WL_DIS# is pulled low input. When this pin pulled low, SDIO interface will be disabled.
13	WL_HOST_WAKE	I/O	VDIO	Function1. General Purpose Input / Output Pin GPIO10 Function2. WLAN to wake-up Host output
14	SD_D2	I/O	VDIO	SDIO data line 2
15	SD_D3	I/O	VDIO	SDIO data line 3
16	SD_CMD	I/O	VDIO	SDIO command line
17	SD_CLK	I	VDIO	SDIO CLK line
18	SD_D0	I/O	VDIO	SDIO data line 0
19	SD_D1	I/O	VDIO	SDIO data line 1
20	GND	P		Ground
21	NC	--		NC
22	VDIO	P		Supply voltage for digital IO, 3.3V or 1.8V is alternative; VDDIO 3.3V for SDIO default speed and high-speed modes, 1.8V for SDR12/SDR25/SDR50/DDR50 modes.

23	NC	--		NC
24	SUSCLK_IN	I	VDIO	External 32K or RTC clock input
25	PCM_DOUT	I/O	VDIO	Function1. General Purpose Input / Output Pin GPIO1 Function2. PCM Data output
26	PCM_CLK	I/O	VDIO	Function1. General Purpose Input / Output Pin GPIO3 Function2. PCM Clock input
27	PCM_DIN	I/O	VDIO	Function1. General Purpose Input / Output Pin GPIO0 Function2. PCM data input
28	PCM_SYNC	I/O	VDIO	Function1. General Purpose Input / Output Pin GPIO2 Function2. PCM sync I/O signal
29	NC	--		NC
30	NC	--		NC
31	GND	p		Ground
32	NC	--		NC
33	GND	p		Ground
34	BT_DIS#	I/O	VDIO	Shared with GPIO11, This Pin Can Externally Shutdown the RTL8821CS BT function when BT_DIS# is pulled low input. When this pin pulled low, UART interface will be also disabled.
35	NC	--		NC
36	GND	P		Ground
37	NC	--		
38	NC	--		
39	NC	--		
40	NC	--		
41	UART_RTS	O	VDIO	UART RTS
42	UART_OUT	O	VDIO	UART Data Out
43	UART_IN	I	VDIO	UART Data In
44	UART_CTS	I	VDIO	UART CTS

P: Power, I: Input, O: Output, I/O: In/Output, A I/O: Analog In/Output, RF: Analog RF Port

3. Electrical and Thermal Specifications

3.1 Recommended Operating Conditions

Parameters		Min	Typ	Max	Units
Ambient Operating Temperature		-20	25	70	℃
External Antenna VSWR			1.7	2.0	/
Supply Voltage	VDD33	3.1	3.3	3.5	V
	VDIO	3.1	3.3	3.5	V
		1.7	1.8	1.9	V

3.2 Digital 3.3V I/O DC Specifications

Symbol	Parameter	Min	Typ	Max	Units
VIH	Input High Voltage	2.0	3.3	3.6	V
VIL	Input Low Voltage	--	0	0.9	V
VOH	Output High Voltage	2.97	--	3.3	V
VOL	Output Low Voltage	0	--	0.33	V

3.3 Digital 1.8V I/O DC Specifications

Symbol	Parameter	Min	Typ	Max	Units
VIH	Input High Voltage	1.3	1.8	2.0	V
VIL	Input Low Voltage	--	0	0.8	V
VOH	Output High Voltage	1.62	--	1.8	V
VOL	Output Low Voltage	0	--	0.18	V

3.4 Current Consumption

Conditions : VDD33=3.3V ; VDIO=3.3V Ta:25℃			
Use Case	VDD33 Current (average)		
	Typ	Max	Units

WLAN and BT Unassociated (Linux)	130	160	mA
2.4G 11Mbps TX @16.5dBm (RF test)	330	400	mA
2.4G 11n HT40 MCS7 TX @14.5dBm (RF test)	280	320	mA
5G 11ac VHT80MCS0TX @12dBm (RF test)	338	372	mA
5G 11ac VHT80 MCS9 TX @12dBm (RF test)	304	364	mA
2.4G 11n HT40 MCS7 RX (RF test)	140	165	mA
5G 11ac VHT80 MCS9 RX (RF test)	160	185	mA
BT BR 1M TX@5dBm (RF test)	160	188	mA
BT LE 1M TX@5dBm (RF test)	148	188	mA
BT LE 1M RX (RF test)	129	156	mA

4. WLAN & Bluetooth RF Specifications

4.1 2.4G WLAN RF Specification

Conditions: VDD33=3.3V; Ta:25℃			
Features	**Description**		
WLAN Standard	IEEE 802.11b/g/n		
Frequency Range	2.4~2.4835GHz (2.4GHz ISM Band)		
Channels	Ch1~Ch13 (For 20MHz Channels)		
Modulation	802.11b (DSSS): DBPSK, DQPSK, CCK; 802.11g (OFDM): BPSK, QPSK, QAM16, QAM64; 802.11n (OFDM): BPSK, QPSK, QAM16, QAM64;		
Data Rate	802.11b: 1, 2, 5.5, 11Mbps; 802.11g: 6, 9, 12, 18, 24, 36, 48, 54Mbps; 802.11n (HT20): MCS0~MCS7(1T1R_SISO) 6.5~72.2Mbps; 802.11n (HT20): MCS8~MCS15(2T2R_MIMO) 13~144.4Mbps; 802.11n (HT40): MCS0~MCS7(1T1R) 13.5~150Mbps;		
Frequency Tolerance	≦ ±20ppm		
2.4G Transmitter Specifications (ANT0 & ANT1. TX power of some rates is calibrated, customers can define the target TX power of other rates by modifying configuration file of the driver software. Customers must define the TX power same or lower than recommended Target TX Power as below)			
TX Rate	**TX Power (dBm)**	**TX Power Tolerance(dBm)**	**EVM (dB)**
802.11b@1Mbps	Recommended Target TX Power =18.5dBm	±1.5	≦-15
802.11b@11Mbps	Calibrated TX Power =16.5dBm	±1.5	≦-15

802.11g@6Mbps	Recommended Target TX Power =17dBm	±1.5	≦-15
802.11g@54Mbps	Calibrated TX Power =15dBm	±1.5	≦-25
802.11n@HT20_MCS0	Recommended Target TX Power =17dBm	±1.5	≦-10
802.11n@HT20_MCS7	Calibrated TX Power =15dBm	±1.5	≦-28
802.11n@HT40_MCS0	Recommended Target TX Power =16.5dBm	±1.5	≦-10
802.11n@HT40_MCS7	Calibrated TX Power =14.5dBm	±1.5	≦-28
2.4G Receiver Specifications (WLAN_ANT0&WLAN_ANT1)			
RX Rate	**Min Input Level (Typ.dBm)**	**Max Input Level**	**PER**
802.11b@1Mbps	-93	-5	< 8%
802.11b@11Mbps	-86	-5	< 8%
802.11g@6Mbps	-91	-5	< 10%
802.11g@54Mbps	-73	-5	< 10%
802.11n@HT20_MCS0	-89	-5	< 10%
802.11n@HT20_MCS7	-69	-5	< 10%
802.11n@HT40_MCS0	-87	-5	< 10%
802.11n@HT40_MCS7	-67	-5	< 10%

4.2 5G WLAN RF Specification

Conditions: VDD33=3.3V; Ta:25℃	
Features	**Description**
WLAN Standard	IEEE 802.11a/n/ac
Frequency Range	5.15~5.25GHz; 5.25~5.35GHz; 5.47~5.73GHz; 5.735~5.835GHz (5GHz ISM Band)
Channels	Ch36, Ch40, Ch44, Ch48; Ch52~Ch64; Ch100~Ch140; Ch149~Ch165(For 20MHz Channels)
Modulation	802.11a (OFDM): BPSK, QPSK, QAM16, QAM64; 802.11n (OFDM): BPSK, QPSK, QAM16, QAM64; 802.11ac (OFDM): BPSK, QPSK, QAM16, QAM64, QAM256;
Data Rate	802.11a: 6, 9, 12, 18, 24, 36, 48, 54Mbps; 802.11n (HT20): MCS0~MCS7(1T1R_SISO) 6.5~72.2Mbps;

	802.11n (HT20): MCS8~MCS15(2T2R_MIMO) 13~144.4Mbps; 802.11n (HT40): MCS0~MCS7(1T1R) 13.5~150Mbps; 802.11n (HT40): MCS8~MCS15(2T2R) 27~300Mbps; 802.11ac (VHT20): MCS0~MCS8(1T1R) 6.5~86.7Mbps; 802.11ac (VHT20): MCS0~MCS8(2T2R) 13~173.3Mbps; 802.11ac (VHT40): MCS0~MCS9(1T1R)13.5~200Mbps; 802.11ac (VHT40): MCS0~MCS9(2T2R)27~400Mbps; 802.11ac (VHT80): MCS0~MCS9(1T1R)29.3~433.3Mbps;
Frequency Tolerance	≦ ±20ppm

5G Transmitter Specifications（ANT0 & ANT1. TX power tolerance calibrated, customers can define the target TX power by modifying configuration file of the driver software. Customers must define the TX power same or lower than recommended Target TX Power as below）

TX Rate	TX Power（dBm）	TX Power Tolerance	EVM（dB）
802.11a@6Mbps	Recommended Target TX Power =15dBm	±2	≦-10
802.11a@54Mbps	Calibrated TX Power =13dBm	±2	≦-25
802.11n@HT20_MCS0	Recommended Target TX Power =15dBm	±2	≦-10
802.11n@HT20_MCS7	Calibrated TX Power =13dBm	±2	≦-28
802.11n@HT40_MCS0	Recommended Target TX Power =15dBm	±2	≦-10
802.11n@HT40_MCS7	Calibrated TX Power =13dBm	±2	≦-28
802.11ac@VHT80_MCS0	Recommended Target TX Power =14dBm	±2	≦-10
802.11ac@VHT80_MCS9	Calibrated TX Power =12dBm	±2	≦-30

5G Receiver Specifications(WLAN_ANT0&WLAN_ANT1)

RX Rate	Min Input Level（Typ.dBm）	Max Input Level	PER
802.11a@6Mbps	-89	-5	< 10%
802.11a@54Mbps	-72	-5	< 10%

802.11n@HT20_MCS0	-87	-5	< 10%
802.11n@HT20_MCS7	-69	-5	< 10%
802.11n@HT40_MCS0	-86	-5	< 10%
802.11n@HT40_MCS7	-67	-5	< 10%
802.11ac@VHT80_MCS0	-82	-5	< 10%
802.11ac@VHT80_MCS9	-57	-5	< 10%

4.3 Bluetooth RF Specification

Conditions: VDD33=3.3V; Ta:25℃			
Features	**Description**		
Bluetooth Specification	Bluetooth Core Specification v4.2/4.0/2.1		
Frequency Range	2.4~2.4835GHz (2.4GHz ISM Band)		
Channels	Bluetooth Classic: Ch0~Ch78 (For 1MHz Channels); Bluetooth Low Energy: Ch0~Ch39 (For 2MHz Channels);		
Power Classes	Bluetooth Classic: Class1; Bluetooth Low Energy: Class1.5;		
Data Rate & Modulation	BR_1Mbps: GFSK; EDR_2Mbps: π/4-DQPSK; EDR_3Mbps: 8DPSK; LE_1Mbps: GFSK (Uncoded);		
Bluetooth Transmitter Specifications (BT_ANT)			
Items	**Min**	**Typ**	**Max**
TX Power			
BR_1M	2dBm	5dBm	8dBm
EDR_2/3M	2dBm	5dBm	8dBm
LE_1M	2dBm	5dBm	8dBm

Items	Min	Typ	Max
BR_1M (DH1) Modulation Characteristics			
Δf1avg	140KHz	164.91KHz	175KHz
Δf2avg	115KHz	165.46KHz	/
Δf2max	115KHz	166.83KHz	/
Δf2avg/Δf1avg	0.8	1	/
BR_1M (DH1) Initial Carrier Frequency Tolerance			
Init Freq Error	-75kHz	-2.5kHz	+75kHz
EDR_3M(3DH5) EDR Carrier Frequency Stability and Modulation Accuracy			
ωi	-75KHz	10.49KHz	+75KHz
ωi+ωo	-75KHz	13.32KHz	+75KHz
ωo	-10KHz	2.83KHz	+10KHz
8DPSK RMS DEVM	/	0.0915	0.13
8DPSK Peak DEVM	/	0.0455	0.25
LE_1M Modulation Characteristics			
Δf1avg	225KHz	252.08KHz	275KHz
Δf2avg	185KHz	229.77KHz	/
Δf2max	185KHz	222.07KHz	/
Δf2avg/Δf1avg	0.8	0.91	/

Bluetooth Receiver Specifications (BT_ANT)

Items	Sensitivity		Maximum Input Level	
	Input Level(Typ)	BER	Input Level(Typ)	BER
BR_1M (DH1)	-88dBm	≦ 0.1%	-10dBm	≦ 0.1%
EDR_3M (3DH5)	-84dBm	≦ 0.01%	-10dBm	≦ 0.1%
Items	Input Level (Typ)	PER	Input Level (Typ)	PER
LE_1M	-90dBm	≦ 5%	-10dBm	≦ 5%

5 Mechanical Specifications

5.1 Module Outline Drawing

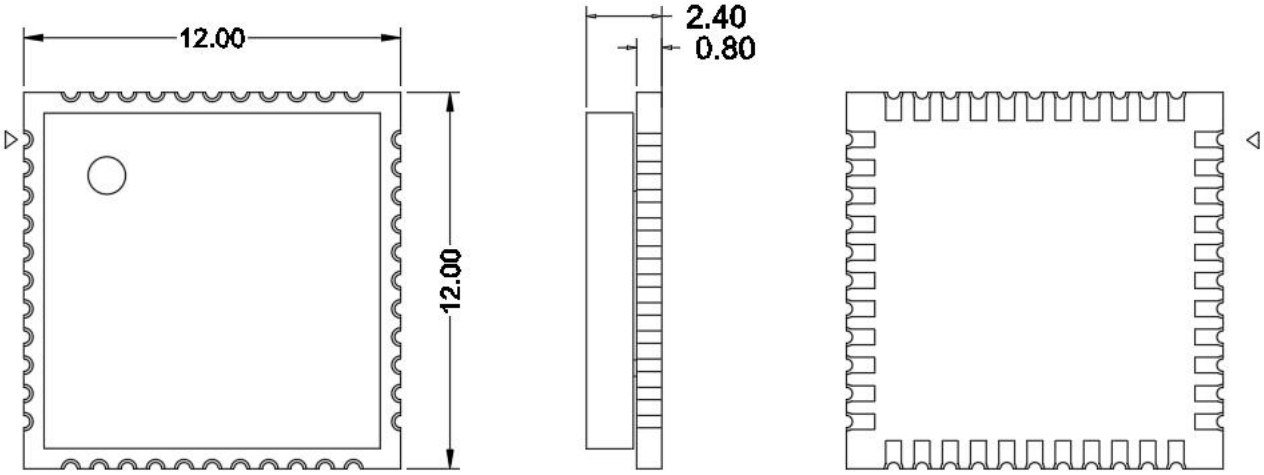

(Top View) (Side View) (Bottom View)

Module dimension: 12.0mm*12.0mm*2.4mm (L*W*H ; Tolerance: ±0.15mm)

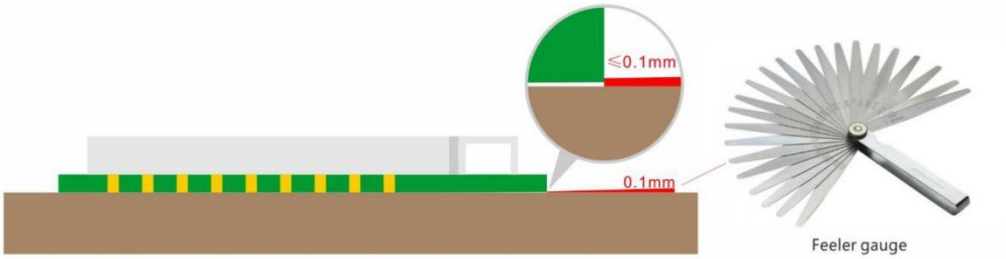

Module Bow and Twist: ≤0.1mm

5.2 Mechanical Dimensions

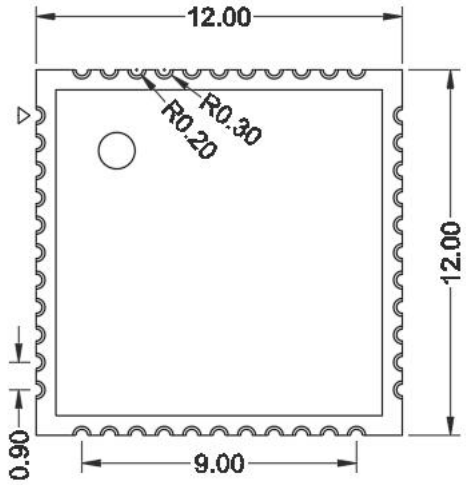

(Top View)

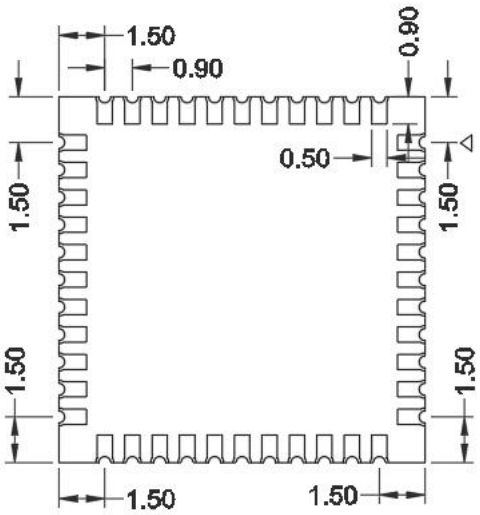

(Bottom View)

6.Application Information

6.1 Typical Application Circuit

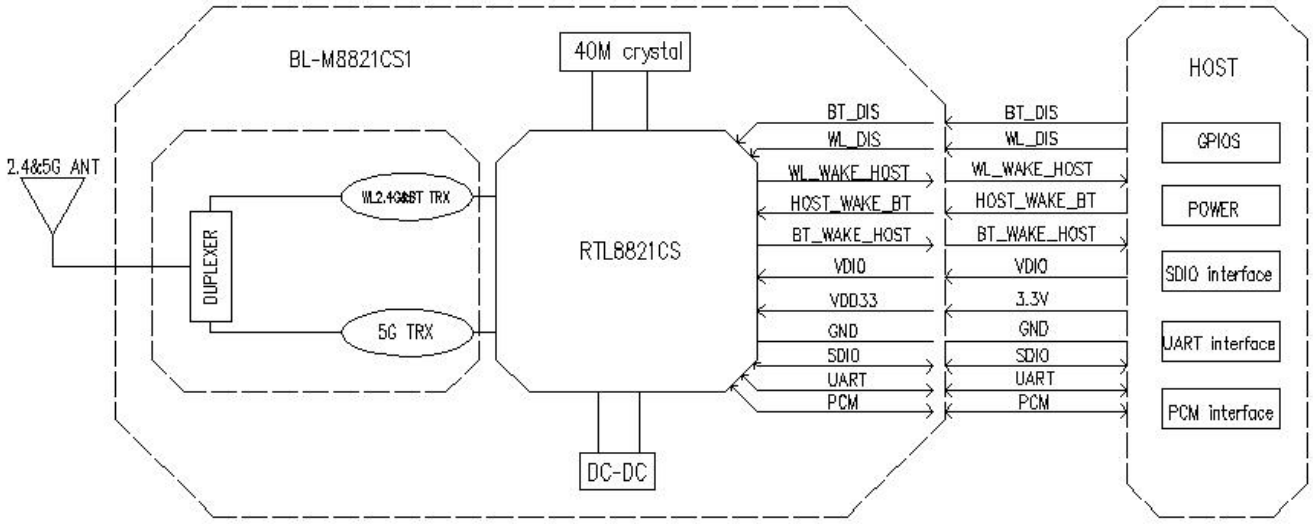

6.2 Recommend PCB Layout Footprint

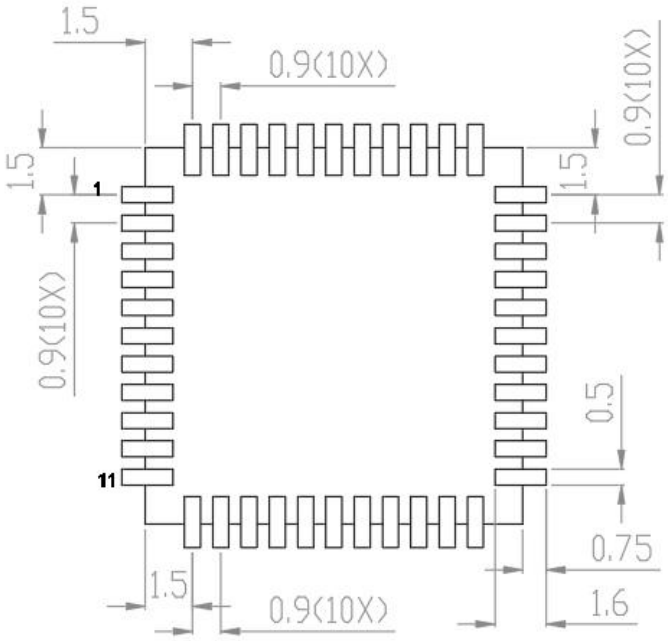

(Design Unit: mm)

6.3 Reflow Soldering Standard Condition

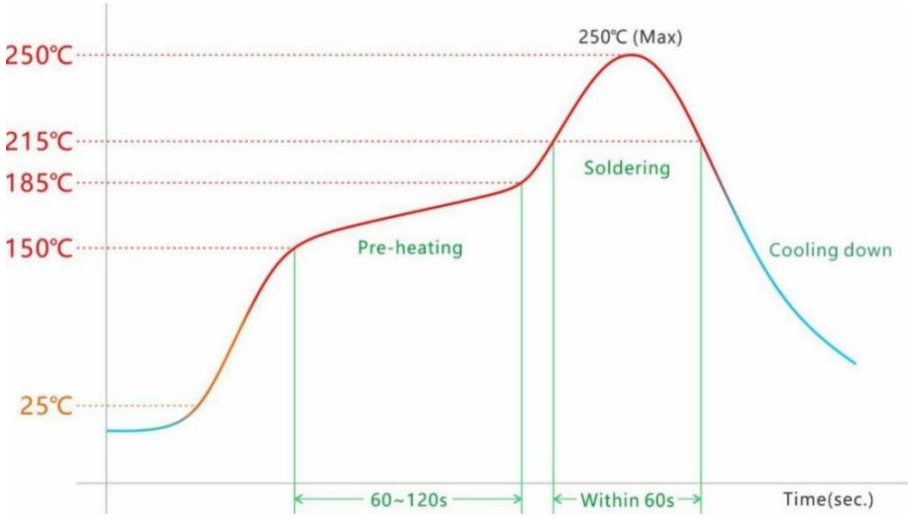

Please use the reflow within 2 times.
Set up the highest temperature within 250℃.

7.Key Components Of Module

No.	Parts	Specification	Manufacturer	Note
1	Chipset	RTL8821CS-CG	Realtek Semiconductor Corp.	
2	PCB	BL-M8821CS1	ShenZhen Tie Fa Technology Limited	
			Quzhou Sunlord Electronics Co.,Ltd	
			SHEN ZHEN QILI ELECTRON CO.,LTD	
3	Crystal	40MHz-2016	HOSONIC ELECTRONIC CO.,LTD	
			SHENZHEN KAIYUEXIANG ELECTRONICS CO.,LTD	
			Chengde oscillator Electronic Technology CO.,LTD	
4	Diplexer	DP1005	Advanced Ceramic X Corp.	
			Dongguan Hekang Electronics Co.,LTD	

8. Package and Storage Information

8.1 Package Dimensions

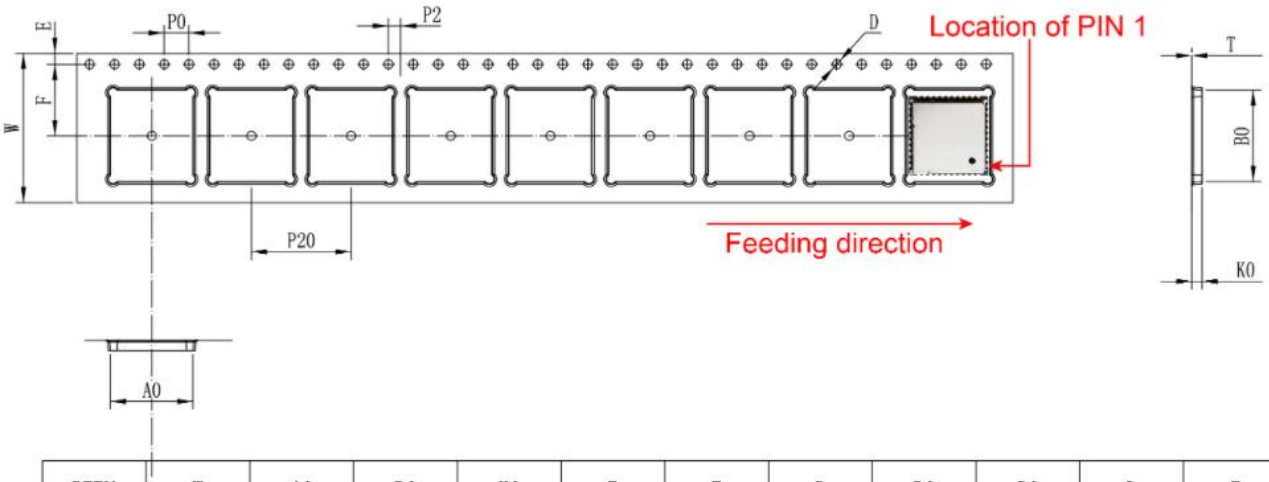

ITEM	W	A0	B0	K0	E	F	P	P0	P2	D	T
DIM	24.00+0.3	12.40±0.1	12.40±0.1	2.90±0.1	1.75±0.1	11.5±0.1	20.00±0.1	4.00±0.1	2.00±0.1	Ø1.5±0.1	0.30±0.05

Package specification:

1、 1,000 modules per roll and 5,000 modules per box.
2、Outer box size: 37.5*36*29cm.
3、 The diameter of the blue environment-friendly rubber plate is 13 inches, with a total thickness of 28mm (with a width of 24mm carrying belt).
4、 Put 1 package of dry agent (20g) and humidity card in each anti-static vacuum bag.
5、 Each carton is packed with 5 boxes.

4.3 Storage Conditions

Absolute Maximum Ratings:
Storage temperature: -40℃ to +85℃,
Storage humidity: 10% to 95 (Non-Condensing)
Recommended Storage Conditions:
Storage temperature: 5℃ to +40℃,
Storage humidity: 20% to 90% RH

Please use this Module within 12month after vacuum-packaged.
The Module shall be stored without opening the packing.
After the packing opened, the Module shall be used within 72hours.
When the color of the humidity indicator in the packing changed,
the Module shall be baked before soldering.
Baking condition: 60℃, 24hours, 1time.

ESD Sensitivity:
ESD Protection: 2KV(HBM, Maximum rating)
The Module is a static-sensitive electronic device.
Do not operate or store near strong electrostatic fields.
Take proper ESD precautions!

ESD CAUTION

FCC Statement

This device complies with part 15 of the FCC Rules. Operation is subject to the following two conditions:

(1) This device may not cause harmful interference, and

(2) this device must accept any interference received, including interference that may cause undesired operation.

This equipment has been tested and found to comply with the limits for a Class B digital device, pursuant to part 15 of the FCC Rules. These limits are designed to provide reasonable protection against harmful interference in a residential installation. This equipment generates, uses and can radiate radio frequency energy and, if not installed and used in accordance with the instructions, may cause harmful interference to radio communications. However, there is no guarantee that interference will not occur in a particular installation. If this equipment does cause harmful interference to radio or television reception, which can be determined by turning the equipment off and on, the user is encouraged to try to correct the interference by one or more of the following measures:

- Reorient or relocate the receiving antenna.
- Increase the separation between the equipment and receiver.
- Connect the equipment into an outlet on a circuit different from that to which the receiver is connected.
- Consult the dealer or an experienced radio/TV technician for help.

This modular has been tested and found to comply with part 15 requirements for Modular Approval.

FCC Caution: Any changes or modifications not expressly approved by the party responsible for compliance could void the user's authority to operate the equipment. This transmitter must not be co-located or operating in conjunction with any other antenna or transmitter.

Integration instructions for host product manufacturers according to KDB 996369 D03 OEM Manual v01r01

2.2 List of applicable FCC rules

CFR 47 FCC Part 15 Subpart C and Subpart F has been investigated. It is applicable to the modular transmitter

2.3 Specific Operational Use Conditions - Antenna Placement Within the Host Platform

The module is tested for standalone mobile RF exposure use condition.

- The antenna must be installed such that 20cm is maintained between the antenna and users,
- The transmitter module may not be co-located with any other transmitter or antenna.

In the event that these conditions cannot be met (for example certain laptop configurations or co-location with another transmitter), then the FCC authorization is no longer considered valid and the FCC ID cannot be used on the final product. In these circumstances, the OEM integrator will be responsible for re-evaluating the end product (including the transmitter) and obtaining a separate FCC authorization.

2.4 Limited Module Procedures

Not applicable

2.5 Trace Antenna Designs

Users should connect antennas to half hole pad through copper tube structure or FP types of RF trace and the trace impedance must be controlled in 50Ω .recommends that the total insertion loss between the antenna pads and antennas should meet the following requirements:

Trace loss

Frequency	Loss
2400MHz-2500MHz	＜0.6dB
5150MHz-5850MHz	＜1.2dB

To facilitate the antenna tuning and certification test, a RF connector and an antenna matching circuit should be added. The following figure is the recommended circuit.

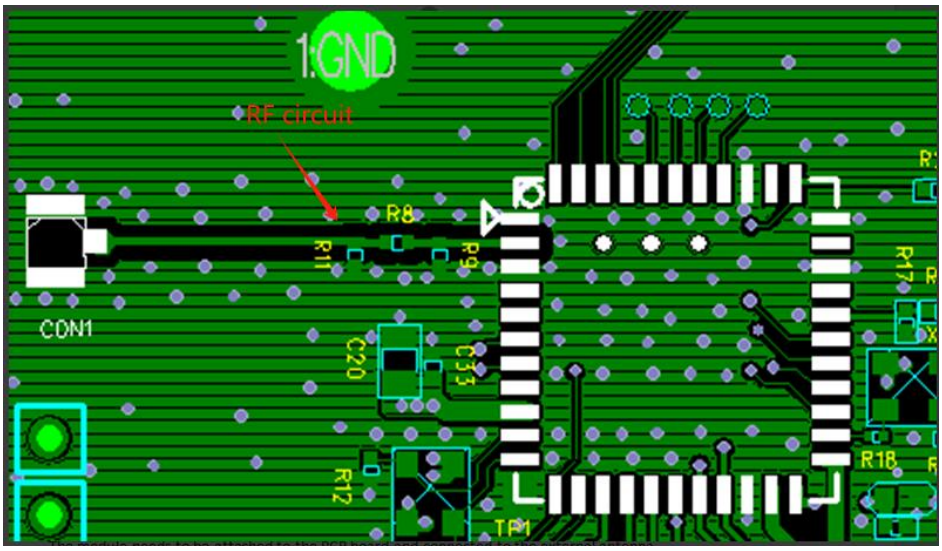

The module needs to be attached to the PCB board and connected to the external antenna through the solder joint of the circuit on the PCB. the internal structure is Chip Antenna. A resistance of 0R is added between the module and the antenna at L1 to ensure that the impedance of the connection between the module and the antenna reaches 50R.The CON1 position on the PCB is where the external antenna is connected.

RF traces layout
1.Keep the RF trace from module ant pin to antenna as short as possible
2.RF trace should be 50 Ω either on the top layer or in the inner layer
3.RF trace should be avoided right angle and sharp angle.
4.Put enough GND vias around RF traces.
5.RF trace should be far away from other high speed signal lines.

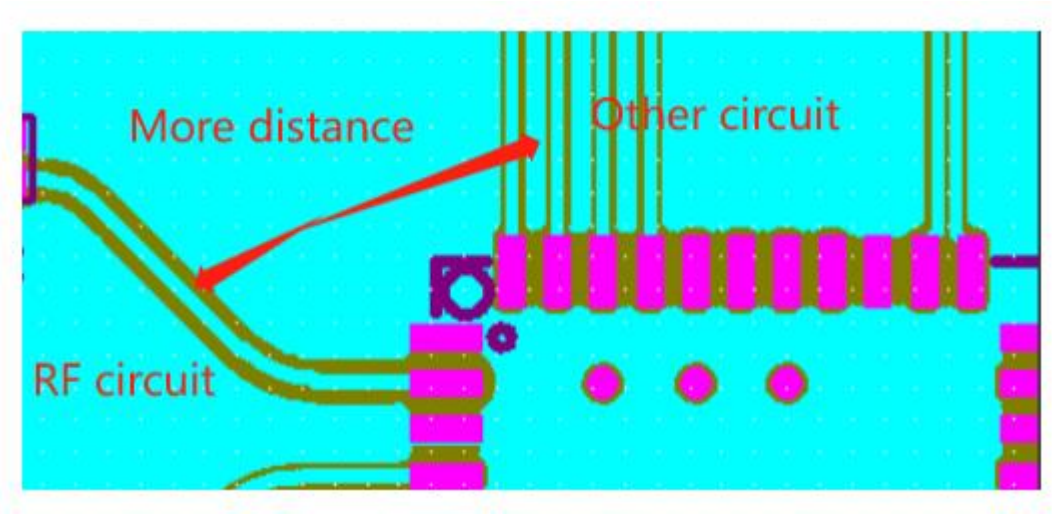

Avoiding the paroling rout of other system antennas nearly.
There should be some distance from The GND to the inner conductor of the IPEX connector. It is better to keep out all the layers from inner to the outer conductor.

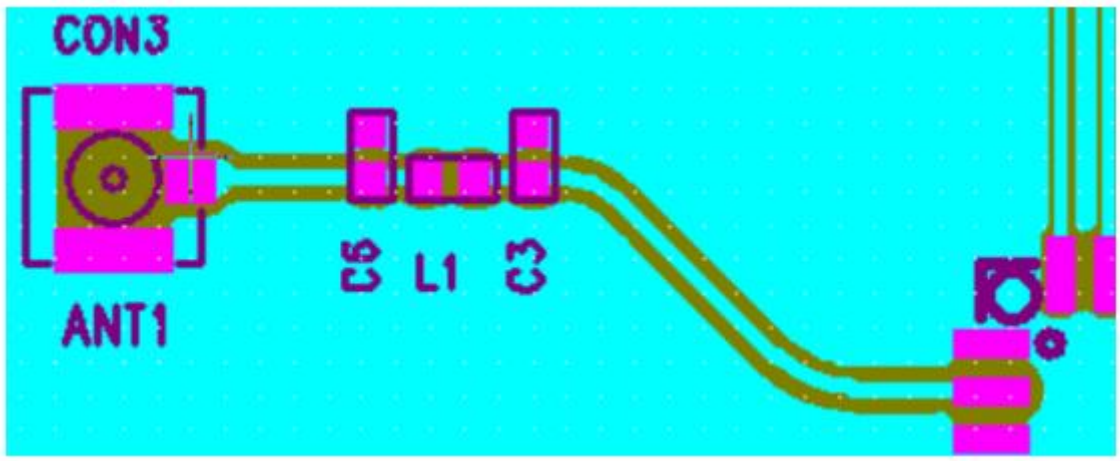

External Antenna VSWR

Parameters	Min	Typ	Max	Units
External Antenna VSWR		1.7	2.0	/

2.6 RF Exposure Considerations

This device complies with FCC radiation exposure limits set forth for an uncontrolled environment. This equipment should be installed and operated with minimum distance 20cm between the radiator & your body.

2.7 Antenna Type and Gain

The following antennas have been certified for use with this module.
Only antennas of the same type with equal or lower gain may also be used with this module.
Other types of antennas and/or higher gain antennas may require the additional authorization for operation.
Antenna Specification list below:

Model	Type	Connector	Pake gain (dBi)		
BL-M8821CS1	Chip Antenna	/	2400-2483.5 MHz	5150-5250 MHz	5725-5850 MHz
	Chip Antenna	/	2.23	2.79	
	Chip Antenna	/	1.47	3.36	

2.8 End Product Labelling Compliance Information

When the module is installed in the host device, the FCC ID label must be visible through a window on the final device or it must be visible when an access panel, door or cover is easily removed. If not, a second label must be placed on the outside of the final device that contains the following text: "Contains FCC ID: 2BBYEBL-M8821CS1". The FCC ID can be used only when all FCC compliance requirements are met.

2.9 Information on Test Modes and Additional Testing Requirements

This transmitter is tested in a standalone mobile RF exposure condition and any co-located or simultaneous transmission with other transmitter(s) class II permissive change re-evaluation or new FCC authorization.
Host manufacturer installed this modular with single modular approval should perform the test of radiated emission and spurious emission according to FCC part 15C, Part 15E, 15.209, 15.207 requirement, only if the test result comply with FCC part 15C, Part 15E, 15.209, 15.207 requirement, then the host can be sold legally.

2.10 Additional testing, Part 15 Subpart B Disclaimer

This transmitter modular us tested as a subsystem and its certification does not cover the FCC Part 15 Subpart B rules requirement applicable to the final host. The final host will still need to be reassessed for compliance to this portion of rules requirements if applicable.
As long as all conditions above are met, further transmitter test will not be required. However, the OEM integrator is still responsible for testing their end-product for any additional compliance requirements required with this modular installed.

2.11 Manual Information to The End User

The OEM integrator has to be aware not to provide information to the end user regarding how to install or remove this RF module in the user's manual of the end product which integrates this module.
The host integrator must follow the integration instructions provided in this document and ensure that the composite system end product complies with the requirements by a technical assessment or evaluation to the rules and to KDB Publication 996369.
The host integrator installing this module into their product must ensure that the final composite product complies with the requirements by a technical assessment or evaluation to the rules, including the transmitter operation and should refer to guidance in KDB Publication 996369.
OEM/Host Manufacturer Responsibilities
OEM/Host manufacturers are ultimately responsible for the compliance of the Host and Module. The final product must be reassessed against all the essential requirements of the FCC rule such as FCC Part 15 Subpart B before it can be placed on the US market. This includes reassessing the transmitter module for compliance with the Radio and RF Exposure essential requirements of the FCC rules.

2.12 How to Make Changes - Important Note

In the event that these conditions cannot be met (for example certain laptop configurations or co-location with another transmitter), then the FCC authorization is no longer considered valid and the FCC ID cannot be used on the final product. In these circumstances, the OEM integrator will be responsible for re-evaluating the end product (including the transmitter) and obtaining a separate FCC authorization.