深圳市鑫恒阳科技有限公司

Shenzhen XINHENGYANG Technology Co., Ltd

承　认　书

SPECIFICATION FOR APPROVAL

客户名称 Customer Name: _____

产品型号 Product Model: _____

客户料号 Customer P/N : _____

鑫恒阳料号 XINHENGYANG P/N: PBX2012MA01

Antenna Test Data Report from XIN HENG YANG

Customer	Hotus	Project Name	HT-LCD009
NO	Content	Specification	
1	Frequency	2400-2500MHz	
2	Project Type	Bluetooth Glasses	
3	Terminal	/	
4	Feedpoint Type	Bipolar	
5	Line length	/	
6	Antenna Type	PIFA	
7	Antenna Material	CHIP	
8	Remark		
RF	Rao Yangpeng	18679436972	xinhengyang1116@163.com

Content

I Introduction to Testing Room

II Machine Image

III Antenna Position

IV Passive Standing Wave Diagram

V Passive 3D&2D Field Pattern Diagram

VI Passive Efficiency&Gain

VII Antenna Matching

Focused and sustained doing one thing
https://www.xhy-2008.com

I Introduction to Testing Room

1. **Active test:** supports 2G, 3G, 4G, 5G standard multi-mode measurement NB-IoT, eMTC, CAT-1, Bluetooth 1-5, WIFI 802.11 a/b/g/n/ac/ax, can measure TRP TIS.

2. **Passive test:** testable gain, efficiency.

3. TWS headphone test head mold, complete set of human heads and hands.

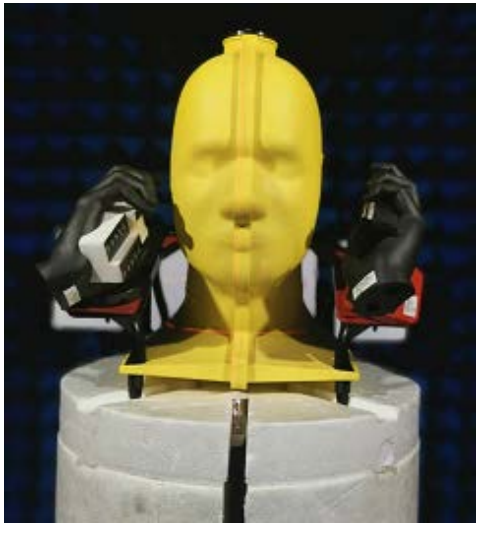

II Machine Image

Focused and sustained doing one thing
https://www.xhy-2008.com

III Antenna Position

Focused and sustained doing one thing
https://www.xhy-2008.com

IV Passive Standing Wave Diagram – L

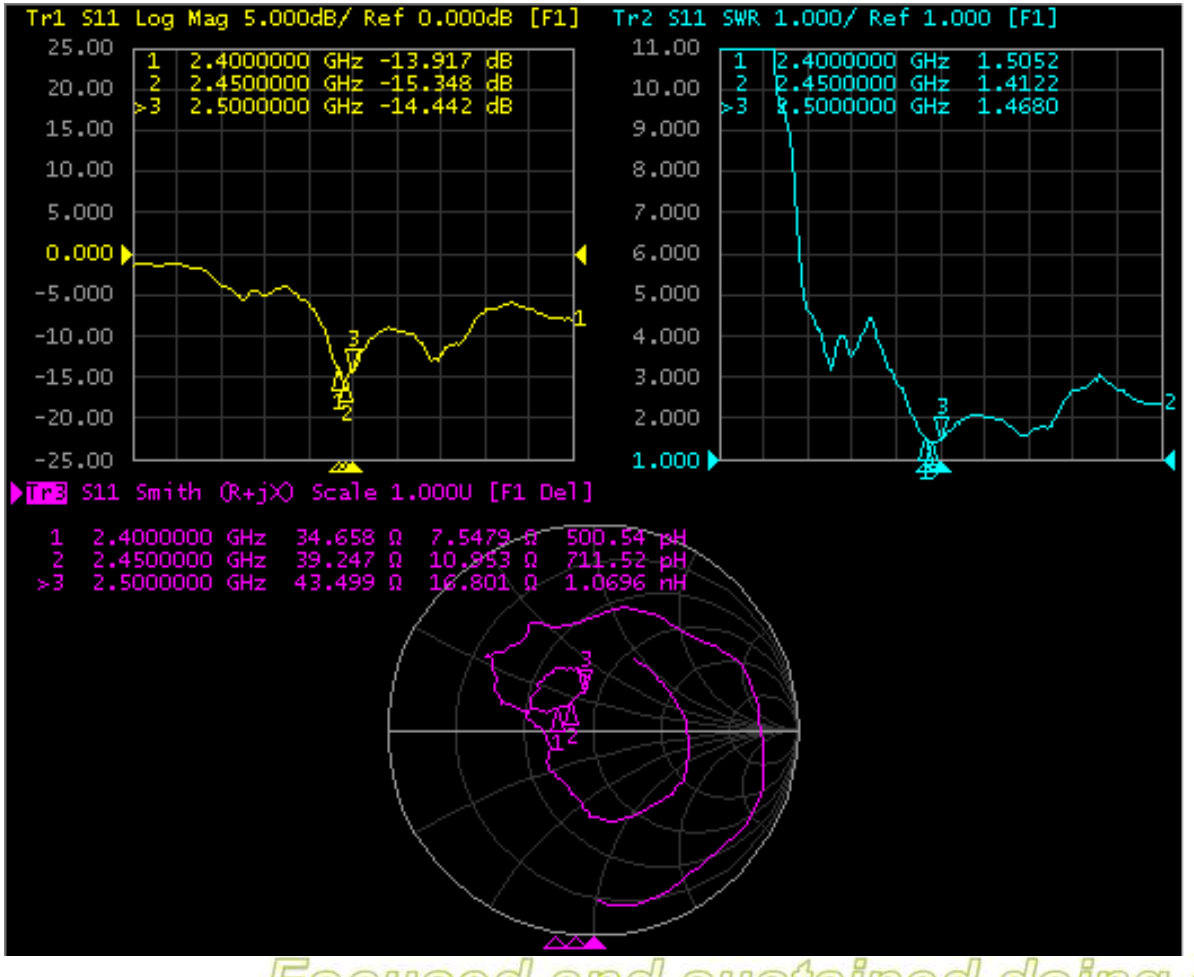

Focused and sustained doing one thing
https://www.xhy-2008.com

IV Passive Standing Wave Diagram – R

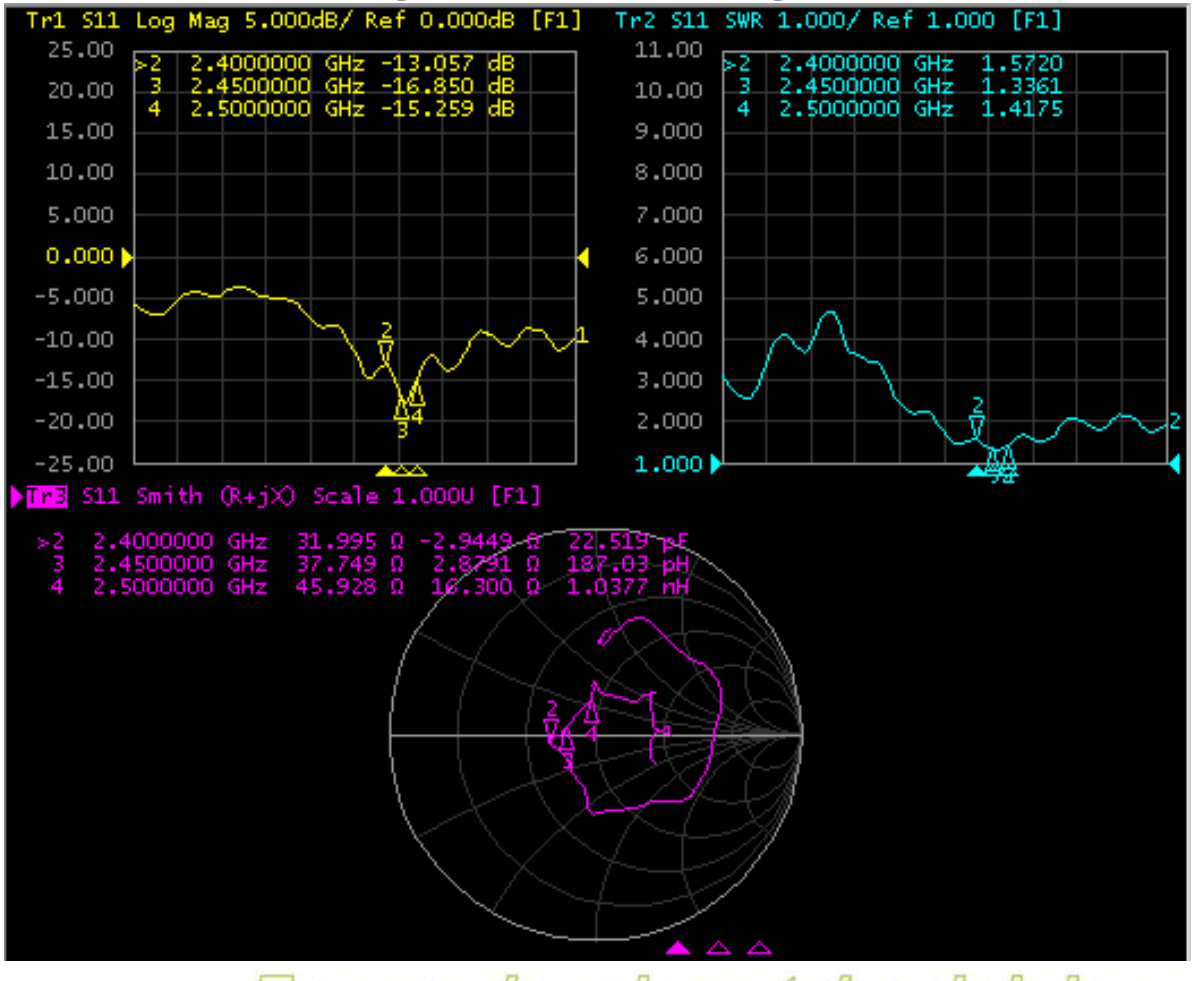

Focused and sustained doing one thing
https://www.xhy-2008.com

V Passive 3D&2D Field Pattern Diagram - L

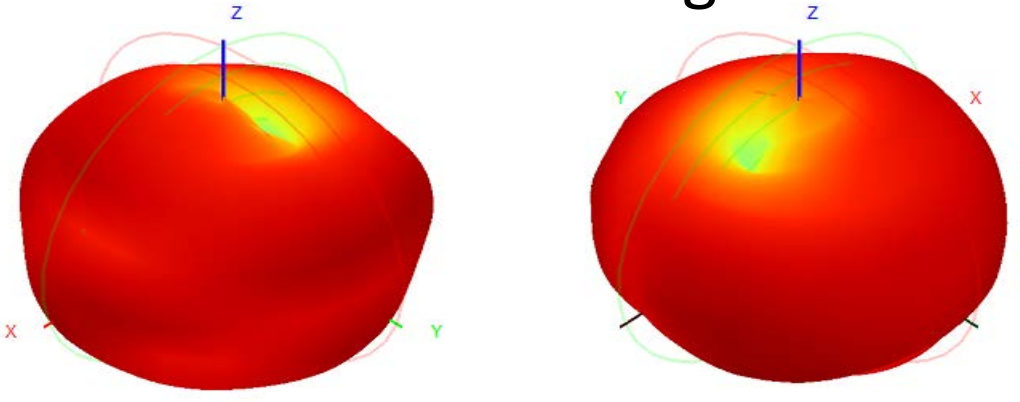

Total(E1-XZ)

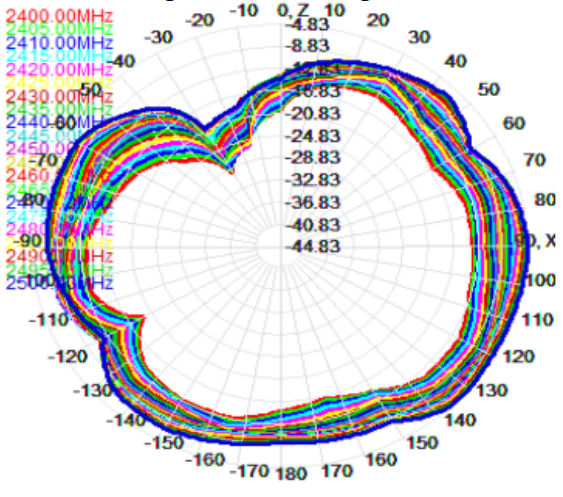

Total(E2-YZ)

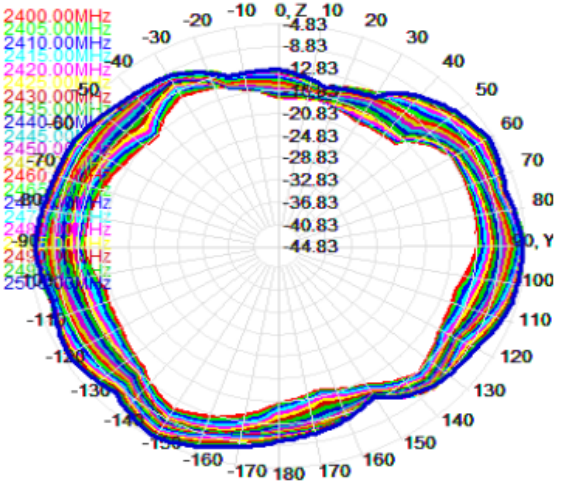

Total(H-XY)

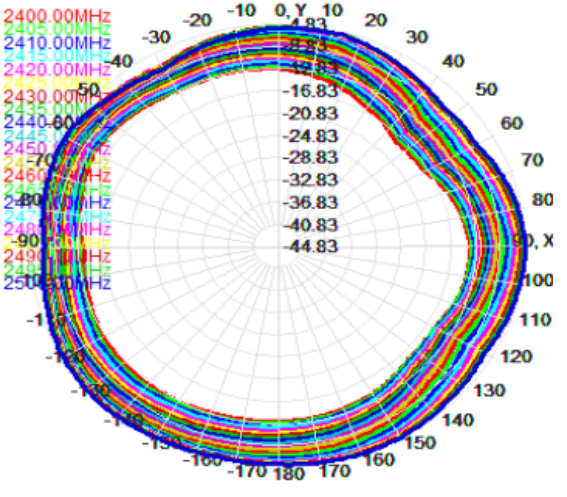

Focused and sustained doing one thing
https://www.xhy-2008.com

V Passive 3D&2D Field Pattern Diagram - R

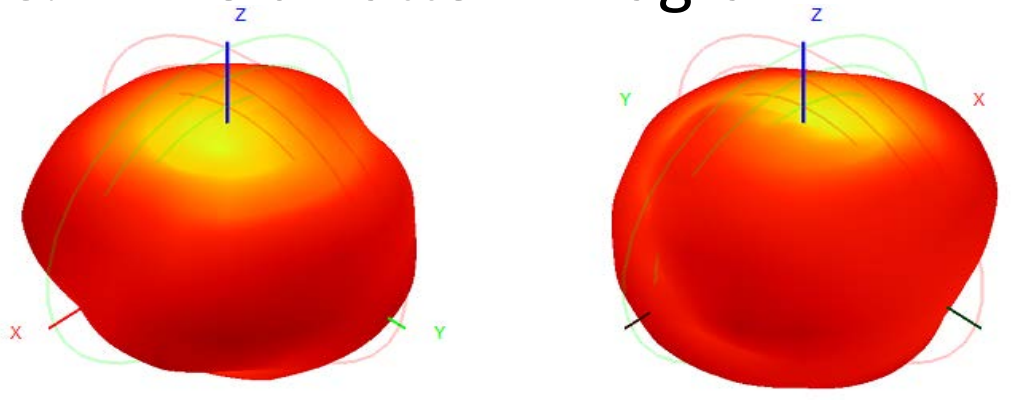

Total(E1-XZ)

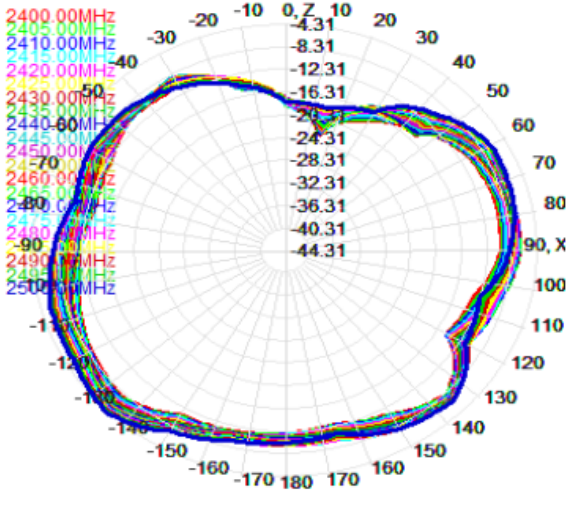

Total(E2-YZ)

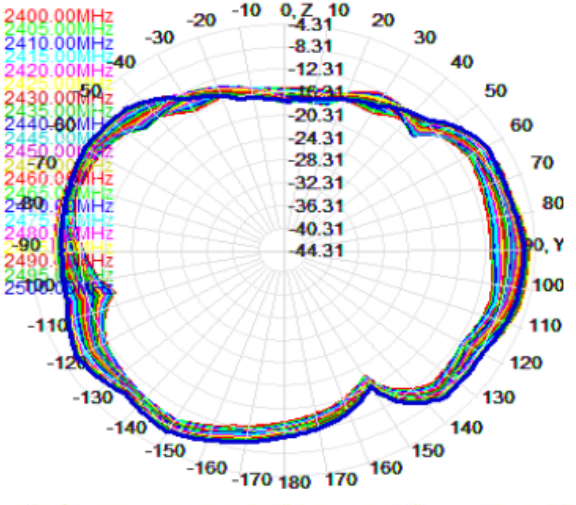

Total(H-XY)

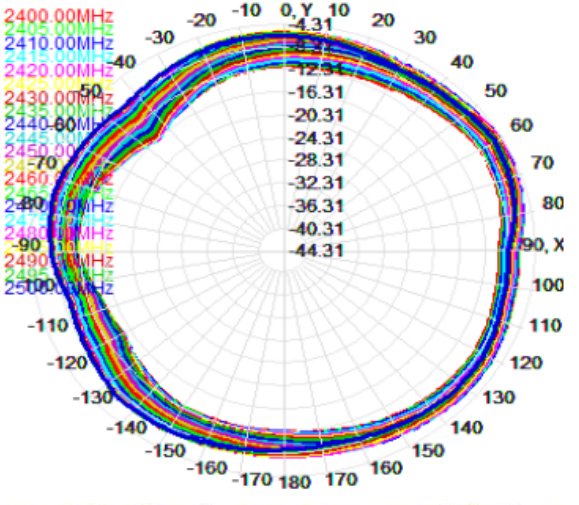

Focused and sustained doing one thing
https://www.xhy-2008.com

VI Passive Efficiency&Gain

L			R		
Freq (MHz)	Gain(dBi)	Effi(%)	Freq (MHz)	Gain(dBi)	Effi(%)
2400	-4.87	19.49	2400	-5.32	21.15
2410	-4.49	20.38	2410	-5.08	21.71
2420	-4.20	21.24	2420	-4.95	22.14
2430	-4.90	22.07	2430	-4.90	22.55
2440	-4.71	23.01	2440	-4.84	23.03
2450	-4.55	23.85	2450	-4.91	23.34
2460	-4.29	24.70	2460	-4.77	23.75
2470	-4.12	25.61	2470	-4.63	24.00
2480	-3.86	26.55	2480	-4.56	24.03
2490	-3.64	27.35	2490	-4.42	24.10
2500	-3.42	28.00	2500	-4.31	24.21

Focused and sustained doing one thing
https://www.xhy-2008.com

VII Antenna Matching - L

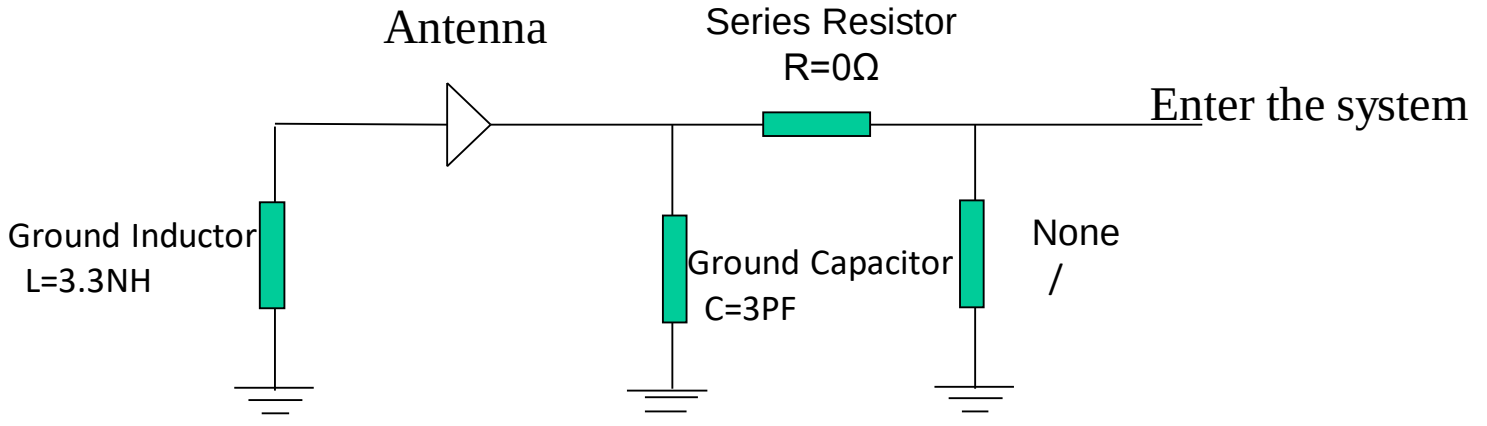

Focused and sustained doing one thing
https://www.xhy-2008.com

VII Antenna Matching - R

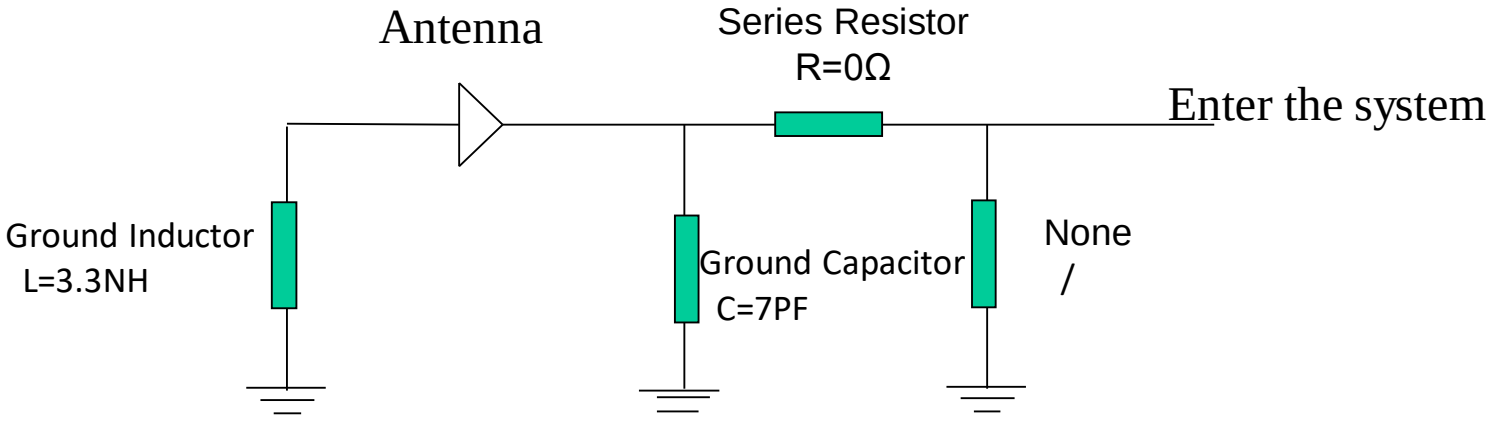

Focused and sustained doing one thing
https://www.xhy-2008.com

工程图纸（Product Drawing）

TERMINAL-CONFIGURATION

EVALUATION BOARD

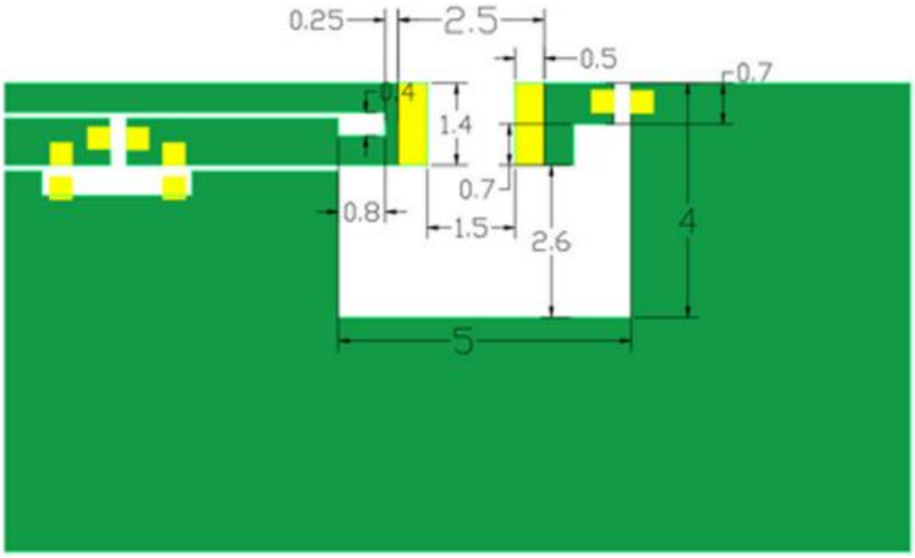

**********END**********