深圳市利信辉电子有限公司

天线规格承认书

Antenna Specification for Approval

客户名称

Customer Name: 鑫纳电子

产品名称:

Product Name: 2.4G天线 全长35mm

客户型号:

Product Name:

产品料号:

Part NO.: C10-35-2.5

制表:

Write By: 周敏

日 期:

Issued Date: 2018/04/24

客 户:

工程R&D Dept	采购Business Dept	承认 Approved By

利 信 辉

研发R&D Dept	工程 Engineer Dept	审核 Approval

梓暮	揭杆	載蜊囀	趼	

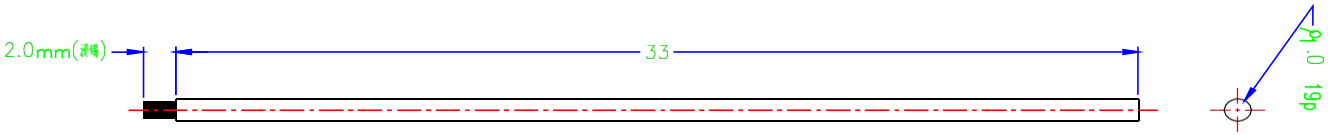

线材:1mm白色镀银线

要求:

1. 标注公差的为重要尺寸，未标注公差的按±0.15

利信辉电子技术有限公司

PART TITLE 錨璃靡備凵 2.4G天线	MATERIAL 第 蹋凵 1mm白色镀银线	UNIT IN 等弇凵 mm	SCALE 掀瞰凵 5:1		VER. 唳棒凵 01
PART NO. 錨璃晤瘍凵 C1.0-33-2.0	DRWING 楶萱凵 文 全	DATE 凵 2015/12/09	CHECKING 机瞄凵	SUPPLIER CFM 鼎茼改 靡凵	

Product Specification

A. Electrical Characteristics **Frequency**
2400MHz ~2500MHz VSWR <3.0
Efficiency >30%
Impedance 50 Ohm
Polarization Line
Gain 0.17DBi
B. Material & Mechanical Characteristics
Material of Radiator Cu
Cable Type 1.0 19P 白色
Connector Type : NO
Dimension
C. Environmental
Operation Temperature - 30 °C ~ + 80 °C
Storage Temperature - 30 °C ~ + 85 °C

Test Equipment & Conditions

1. Network Analyzers :

Agilent 8753D 5071B

2. Communications Test Set:

Agilent E5515C

3. 3D Chamber Test System

Effiency &Gain

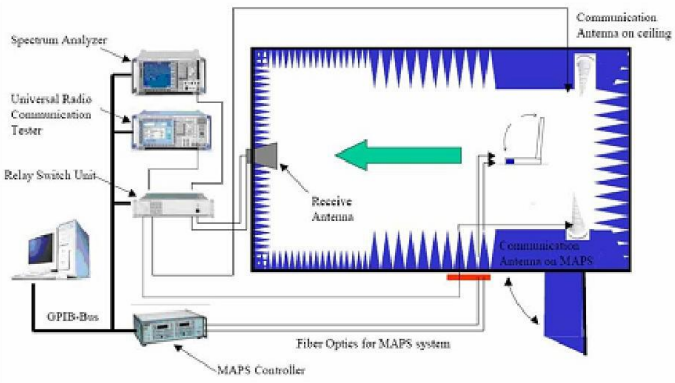

(Testing by 3D anechoic chamber)

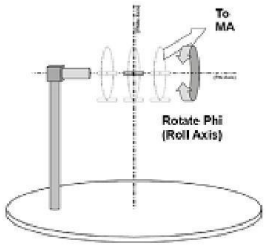

Phi axis test

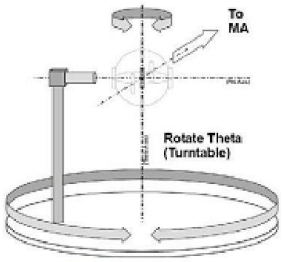

Theta axis test

Effiency &Gain

2.40	**-2.17**
2.440	**0.12**
2.48	**0.17**

Radiation Pattern:

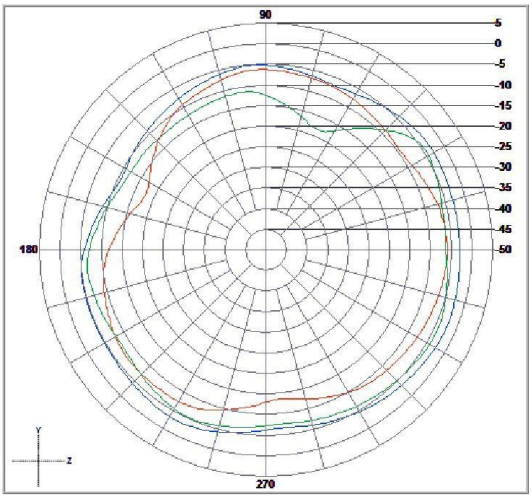

	Vertical	Horizontal	Total
Avg. Gain	-8.4	-6.99	-4.63
Peak Gain	-5.48	-3.77	-2.17

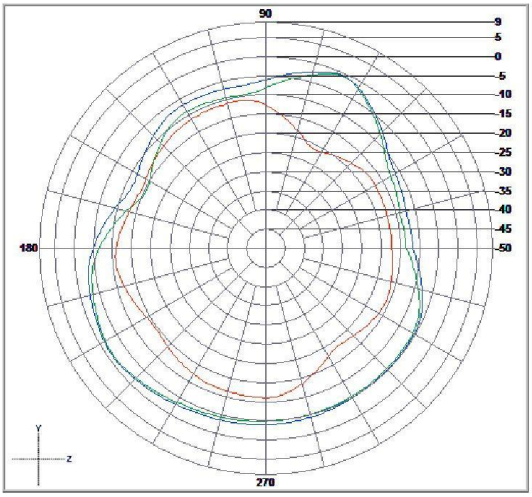

	Vertical	Horizontal	Total
Avg. Gain	-13.34	-5.06	-4.46
Peak Gain	-10.3	0.09	0.12

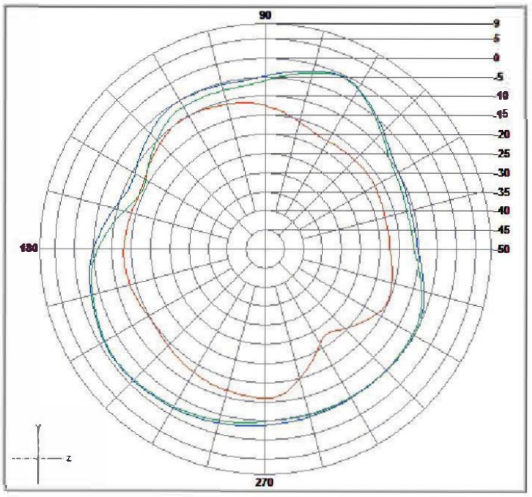
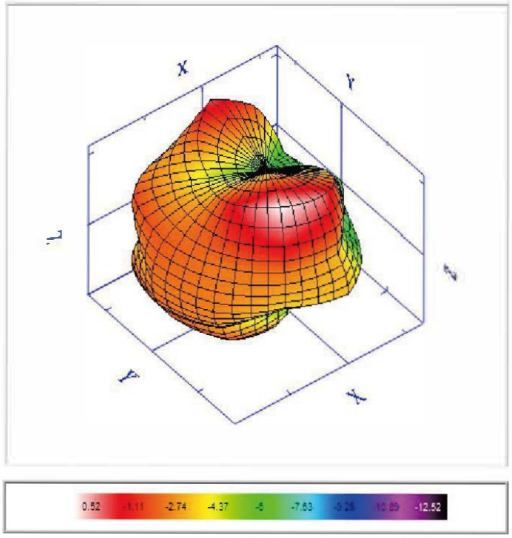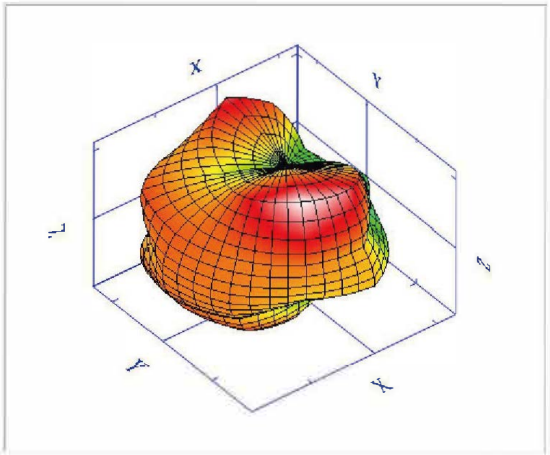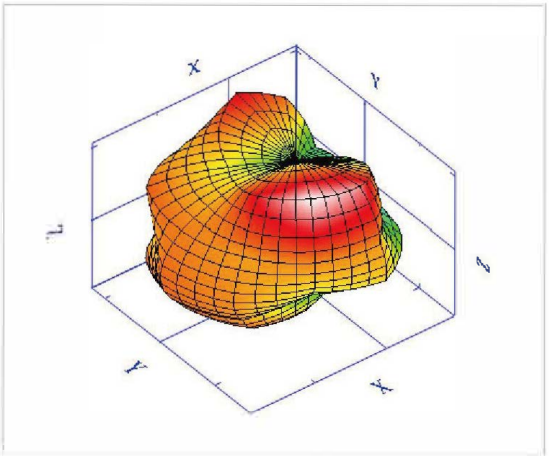
	Vertical	Horizontal	Total
Avg. Gain	-13.42	-4.6	-4.06
Peak Gain	-9.47	0.1	0.17