Instruction for Use

Instruction for Use (IFU) for IoT Device for Large Venues

Product Name: NINA V2

Model Number: NINA V2

FCC ID: 2BC3N-NINA

Version: [Software/Firmware Version]

Table of Contents

1. Introduction
    - 1.1. Device Overview
    - 1.2. Intended Use
2. Safety Information
3. Product Description
4. System Requirements
5. Installation & Setup
6. Operational Guidelines
    - 6.1. General
    - 6.2. LED Guide
7. Troubleshooting
8. Maintenance
9. Disposal
10. Technical Specifications
11. Warranty & Support Information
12. Compliance & Regulatory Information

1. Introduction

This manual is an instruction manual for NINA, a device specially designed to enhance connectivity and automation in large venues. Please read the entire IFU to ensure the safe and effective use of this device.

1.1. Device Overview

NINA is an innovative IoT device crafted for the purpose of self service in the worlds of hospitality and large venues.

Some key features include:

Wireless Connectivity: NINA offers WiFi connectivity for easy and quick connection to personal devices.
NFC Reading: An NFC reader allows the NINA to know exactly which bottle the user wishes to pour from.
Remote Control: With an easy-to-use web app compatible with all smart devices.
Built-in Indicators: NINA is equipped with an LED ring which allows the user to know the device's real time status.

1.2. Intended Use

NINA is a smart pourer intended for hard liquors. The device works in unison with a locking cap placed on each of the bottles intended for use, and a web app. Please use the device only for its intended purpose, and on bottles with fitted caps.

2. Safety Information

- WARNING: Always keep the device away from water and direct sunlight.
- CAUTION: Do not attempt to open or repair the device yourself. Refer to the authorized service provider.

3. Product Description

The NINA Smart Pourer is provided along with a fitted locking cap and a special charger:

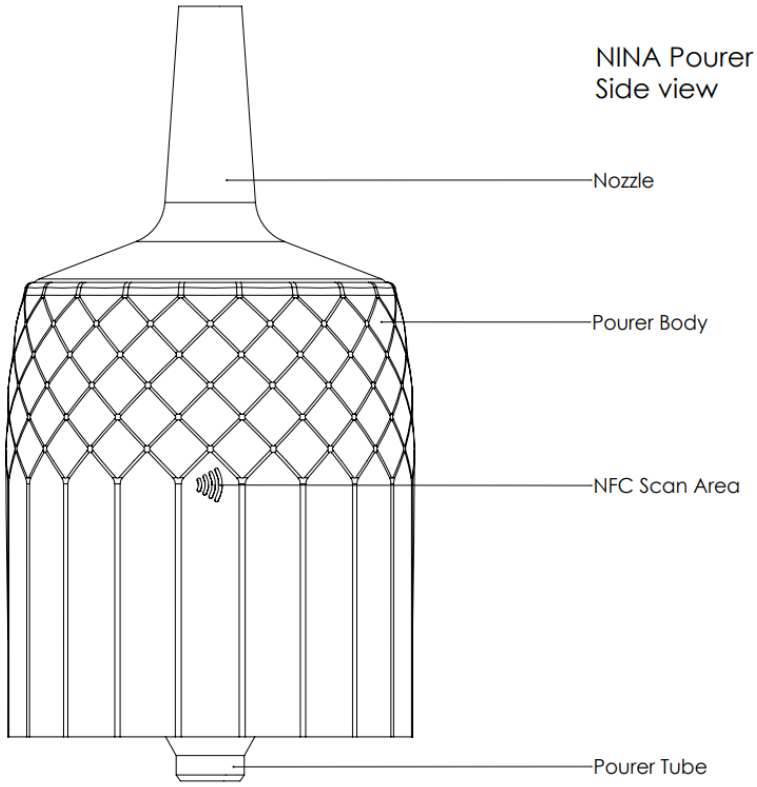

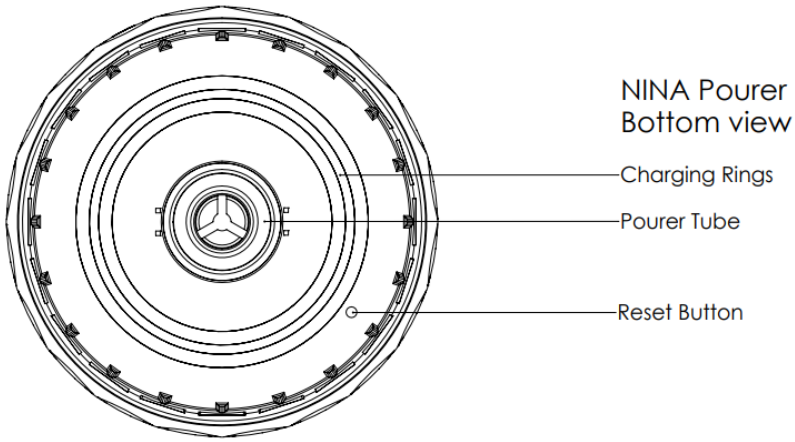

NINA Bottle Lock

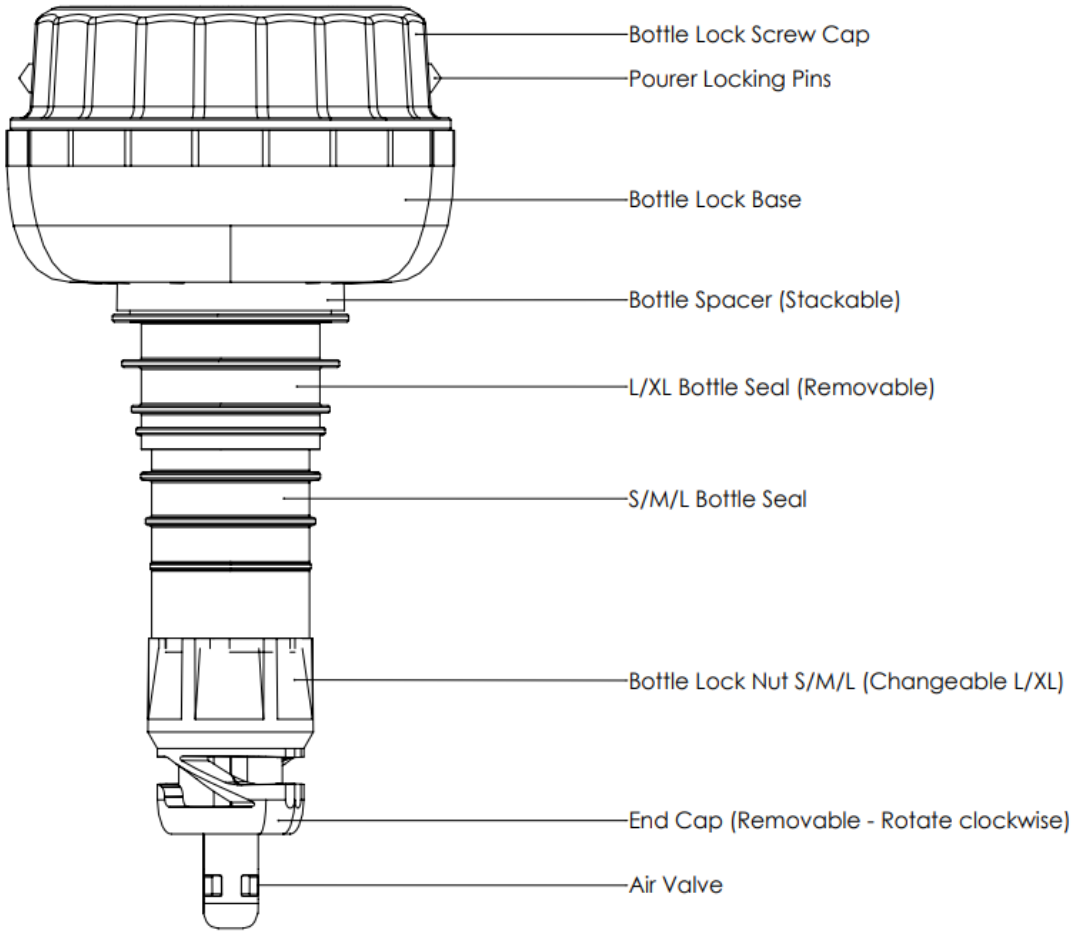

NINA Charger
Side view

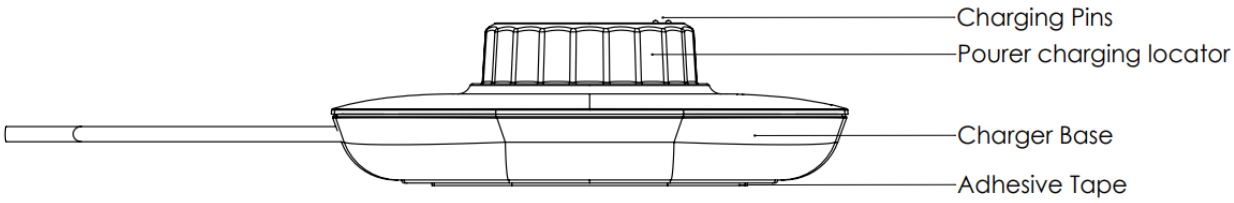

4. System Requirements

- Power Source: The NINA Charger can connect to a standard 5V 1A wall plug.
- Connectivity: NINA connects to a 2.4GHz WiFi
- Storage: When not in use, please store the device away from excessive heat, moisture, or sunlight.
- Compatibility: The NINA Web App is compatible with all smart devices with an internet connection.

5. Installation & Setup

Before getting started, a locking cap must be installed onto each of the bottles intended for use. Simply insert the lock into the neck of the bottle and twist the bronze colored top until resistance is met. To make sure the bottle is sealed properly, flip the bottle and make sure no liquid comes out.

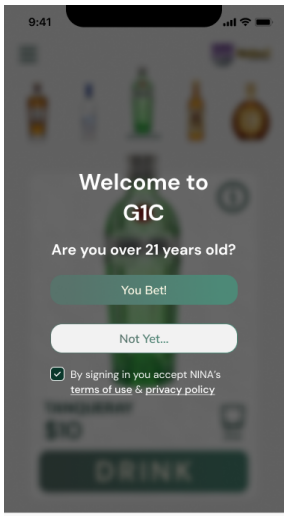

To start using NINA, you must first enter the web app. A printed QR code is placed next to the drinking setup, scan it with your mobile device and you should be transported to the corresponding website.
To use the app, you must first sign in to your account. If this is your first time using NINA, the app will ask you several identification questions.

After signing in you are good to go! To pour a drink, simply place the NINA device on top of a bottle of your choosing. A picture of your chosen bottle

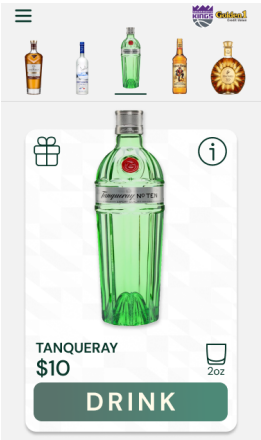

should now appear on your app screen's selection bar, select the bottle and press the "drink" button.

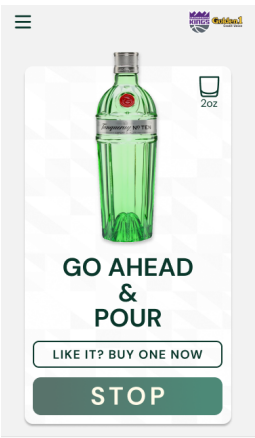

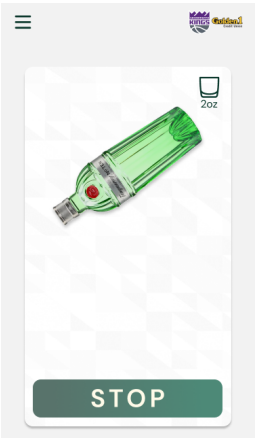

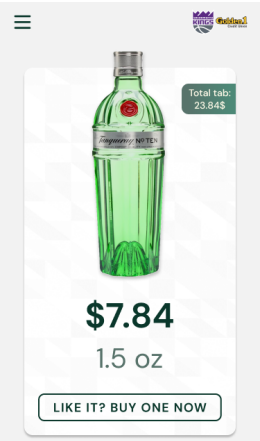

You can start pouring once the app tells you to and the LEDs on the NINA start lighting in a rotational motion. Tilt the bottle and NINA will automatically start pouring. The device stops the flow automatically after one shot, but you may stop ahead of that by simply returning the bottle to an upright position and pressing the "Stop" button.

Once you are finished, you may place the NINA on any other bottle and repeat the process. If the NINA is not currently in use, it is best to place it on the charger.

6. Operational Guidelines

6.1. General

At the bottom of the NINA device is a small, sunken button used to turn the device on and off. To access it you will need a pin similar to the one used to extract SIM cards.

- Press for 2 seconds to turn on/off.
- Press for 7 seconds to restart the device.

NINA works with a WiFi connection. Firmware updates can be pushed remotely granted the device is connected to a network.

6.2. LED Guide

NINA is equipped with an LED strip for indication of various statuses:

LED	Status
Blue	Attempting to connect to WiFi
White	Connected to WiFi
Red	Error
Rotating	Ready to pour
Orange	Charging
Green	Fully Charged

7. Troubleshooting

Problem	Solution

8. Maintenance

Cleaning: NINA is an IP55 device. In order to clean it, you may run only water through the liquid tube. The exterior may be cleaned with a damp rug or wipe. DO NOT submerge the device in water.

Charging: The device is powered by a rechargeable 3.7V battery. It may only be charged by the provided charging port, which can be connected to a standard 5V

1A wall plug. To extend battery life, please store the device in a cool area with no direct sunlight exposure.

Firmware: Updates are pushed remotely while the device is connected to a network.

If the device seems to be having problems, please contact us. Do not attempt to fix it yourself!

9. Disposal

8. Disposal and Environmental Considerations
  8.1. End-of-Life Instructions
  8.2. Recycling Information

Please dispose of the device in accordance with local electronic waste regulations. Do not dispose of in regular trash.

---

10. Technical Specifications

Parameter	Value
Dimensions	[H x W x D] cm
Weight	[X] kg
Connectivity	2.4Ghz wifi
Battery Life	20 Hours

...	...

---

11. Warranty & Support Information

7. Warranty and Support
   7.1. Warranty Coverage
   7.2. Contact Information for Support
   7.3. Returns and Repairs

- Warranty Period: [X years/months]
- Support Contact: [Phone number, email, website]

---

12. Compliance & Regulatory Information

This device complies with [relevant regulations, e.g., FCC, CE, etc.]. For more information, visit [website or contact info].

Note: Always keep this IFU handy for future reference. Ensure all operators of the device are familiar with these instructions.

Class B Warnings

Class B

This equipment has been tested and found to comply with the limits for a Class B digital device, pursuant to Part 15 of the FCC rules. These limits are designed to provide reasonable protection against harmful interference in a residential installation. This equipment generates, uses and can radiate radio frequency energy and, if not installed and used in accordance with the instructions, may cause harmful interference to radio communications. However, there is no guarantee that interference will not occur in a particular installation. If this equipment does cause harmful interference to radio or television reception, which can be determined by turning the equipment off and on, the user is encouraged to try to correct the interference by one or more of the following measures:

a) Reorient or relocate the receiving antenna.

b) Increase the separation between the equipment and receiver.

c) Connect the equipment to an outlet on a circuit different from that to which the receiver is connected.

d) Consult the dealer or an experienced radio/TV technician.

Modification statements

NINA Labs LTD has not approved any changes or modifications to this device by the user. Any changes or modifications could void the user's authority to operate the equipment.

RF Exposure Warnings

RF Exposure - This device has been tested for compliance with FCC RF exposure limits in a portable configuration. This device must not be used with any other antenna or transmitter that has not been approved to operate in conjunction with this device.

Interference statement

This device complies with Part 15 of the FCC Rules and standard(s). Operation is subject to the following two conditions: (1) this device may not cause interference, and (2) this device must accept any interference, including interference that may cause undesired operation of the device.

Wireless notice

This device complies with FCC radiation exposure limits set forth for an uncontrolled environment and meets the FCC radio frequency (RF) Exposure Guidelines and radio frequency (RF) Exposure rules. This transmitter must not be co-located or operating in conjunction with any other antenna or transmitter.

The distance between user and device should be no less than 20cm.