SONEIL SPARK

DC Fast Charger

USER MANUAL

Important Notices

- Installation, operation, transport, handling, and maintenance of the equipment must be carried out in accordance with this manual and all applicable laws, regulations, and standards. The manufacturer shall not be liable for any damage or loss caused by improper operation or failure to comply with the requirements.
- Failure to strictly follow the requirements of this manual will void the equipment warranty. Any operation that deviates from this manual must obtain prior written approval from the manufacturer or an authorized service partner.

Copyright Statement

© Soneil International Limited, All rights reserved. All copyrights, registered trademarks, and trademarks referenced in this document belong to their respective owners.

The information in this document is subject to change without notice and shall not be interpreted as a commitment by Soneil International Limited or its affiliates. Soneil International Limited assumes no responsibility for any errors that may appear in this document.

This company reserves all rights to this document and to the topics, illustrations, technical data, and other contents herein. Without the prior written permission of Soneil International Limited, no part of this document may be reproduced, disclosed to third parties, or used in whole or in part.

Manufacturer and Service

Manufacturer	Soneil International Limited
Product Name	DC Fast Charger
Technical Support / After-Sales Service	Email：info@soneilspark.com WhatsApp: 1-(800)-213-7179

Table of Contents

Important Notices 2

Copyright Statement 2

Manufacturer and Service 2

1. Document Overview 6

    1.1 Purpose and Scope 6

    1.2 Product Model and Naming Rules 6

    1.3 Terms, Abbreviations, and Referenced Standards 6

    1.3.1 Abbreviations 6

    1.3.2 Terms 7

    1.3.3 Referenced Standards 7

2. Safety Instructions 8

    2.1 Warning Labels 8

    2.2 Personnel Qualification Requirements 9

    2.3 Equipment Use Restrictions 9

    2.4 Personal Protective Equipment 9

    2.5 Scope of Responsibility and Disclaimer 10

    2.6 FCC and IC Remarks 11

3. Product Introduction 13

    3.1 Overall Appearance and Structure 13

    3.2 Main Components 14

        3.2.1 Core Components 14

        3.2.2 Human-Machine Interface 15

        3.2.3 Options 15

4. Transport, Incoming Inspection, and Handling 17

4.1 Packaging and Incoming Inspection 17
4.2 Handling Requirements and Precautions 17
4.2.1 Forklift Handling 18
4.2.2 Lifting Handling 18
4.3 Unpacking and Packing List 19
4.3.1 Unpacking Procedure 19
4.3.2 Packing List 19
5. Access to the Inside of Charger 21
5.1 Open/Close the Doors 21
5.1.1 Open/Close the Front Door 21
5.1.2 Open/Close the Side Doors 21
6. Pre-Installation Preparation 23
6.1 Floor Space Requirements 23
6.2 Foundation and Embedded Requirements 24
6.2.1 Prepare the Foundation 24
6.3 Cable Routing and Reserved Length 24
6.4 Recommended Tools 26
7. Equipment Installation 27
7.1 Positioning and Fixing 27
7.2 Post-Installation Inspection 27
8. Electrical Connection 28
8.1 AC Input Connection 28
8.2 Communication Connection 29
9. Commissioning and Initial Operation 30
9.1 Power-On Steps 30
9.2 Basic Parameter Settings 31
9.3 Charging Procedure 32
10. Maintenance and Troubleshooting 34

10.1 Routine Inspection and Maintenance Recommendations 34
10.1.1 External Inspection 34
10.1.2 Internal Inspection 34
10.2 Common Fault Troubleshooting 35
10.3 Safe Shutdown and Power-Off Procedure 36
11. Technical Data and Appendix 37
11.1 Technical Data Table 37
11.2 Overall Dimensions 39

1. Document Overview

This manual describes the installation and operating instructions for Soneil Spark DC EV charger. Before installing this product, read this manual carefully and become familiar with all relevant requirements and operating instructions to ensure that the equipment is installed and commissioned safely, correctly, and smoothly.

1.1 Purpose and Scope

This manual provides guidance for the transport, installation, electrical connection, commissioning, trial operation, routine use, and basic maintenance of Soneil Spark DC EV Charger.

- Field installers
- After-sales service engineers
- Operation and maintenance personnel
- Users

1.2 Product Model and Naming Rules

To facilitate product identification, configuration management, order confirmation, and after-sales service, this product uses a unified model coding rule.

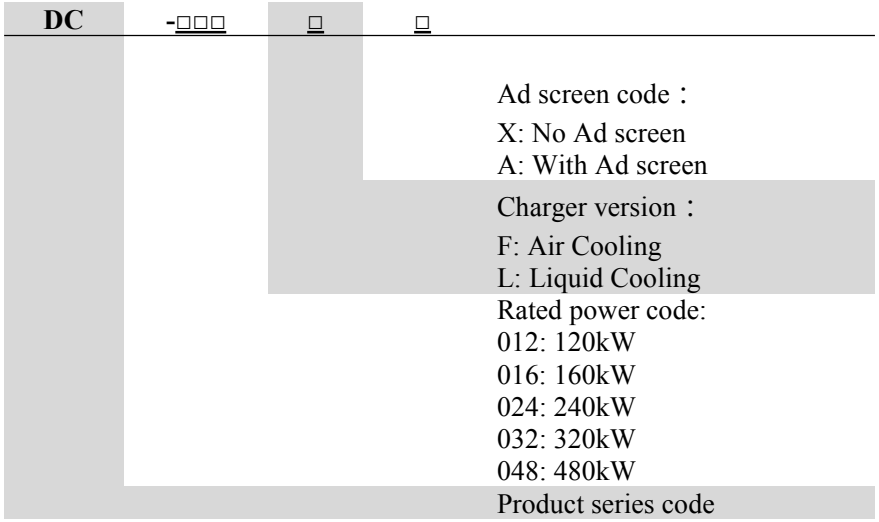

This manual applies to the following HVIN/ product models

DC-012FA, DC-012FX, DC-016FA, DC-016FX, DC-024FA, DC-024FX, DC-032FA, DC-032FX, DC-032LA, DC-032LX, DC-040LA, DC-040LX, DC-048LA, DC-048LX

1.3 Terms, Abbreviations, and Referenced Standards

1.3.1 Abbreviations

Abbreviation	Description
AC	Alternating current
CCS	Combined Charging System, a standard charging method for electric vehicles
DC	Direct current
EMC	Electromagnetic compatibility
EV	Electric vehicle
HMI	Human Machine Interface

MCB	Miniature circuit breaker
MID	Measuring Instruments Directive
NACS	North American Charging Standard
OCPP	Open charge point protocol
PE	Protective earth
PPE	Personal protective equipment
RFID	Radio-frequency identification
SPD	Surge protective devices

NOTE
It is possible that not all terms are present in this document.

1.3.2 Terms

Terminology	Description
Cabinet	Enclosure of the EVSE, including the components on the inside
Local rules	All rules that apply to the EVSE during the entire lifecycle of the EVSE. The local rules also include the national laws and regulations
Open charge point protocol	Open standard for communication with charge stations
Protective devices	Devices for the personal protection of individuals against the risk of injury or electrical shock when they do commissioning, operation and maintenance activities. Examples of protective devices are a door, the electrical parts covers, the latches, etc.
Site operator	Entity that is responsible for the day-to-day control of the EVSE. The site operator does not have to be the owner
Qualified installer	The installer is a qualified person to install the EVSE according to the applicable local rules and fully knows the EVSE and its safe installation. The qualified installer obeys all local rules and the instructions in the operation and installation manual.
Owner	Legal owner of the EVSE
User	Owner of an EV, who uses the EVSE to charge the EV

NOTE
It is possible that not all terms are present in this document.

1.3.3 Referenced Standards

System Certifications	ETL, FCC, CSA, Energy Star
Metering	CTEP/NTEP
EMC	FCC 47 CFR Part 15B (Class A)
OCPP	1.6J and 2.0.1

Vehicle Communication Protocol	DIN SPEC 70121, ISO 15118-2, ISO 15118-3, Plug & Charge

2. Safety Instructions

This chapter summarizes the principal risk warnings, operational limitations, and safety requirements that must be observed during transport, installation, commissioning, operation, and maintenance.

2.1 Warning Labels

This manual uses different signal words and safety symbols to indicate potential risks during unpacking, handling, installation, commissioning, operation, and maintenance. Personnel must understand the meaning of all warning information and strictly follow the relevant requirements.

Warning labels identify different types of hazards. The risk level shall be determined based on the equipment location, job scenario, and possible consequences, and the corresponding management and protective measures shall be taken according to DANGER, WARNING, CAUTION, or NOTE.

	DANGER Indicates an imminently hazardous situation. If not avoided, it will result in death or serious injury.
	WARNING Indicates a potentially hazardous situation which, if not avoided, could result in serious personal injury, death, or major equipment damage.
	CAUTION Indicates a low to medium level of risk. If not avoided, it may result in minor or moderate injury, equipment damage, or abnormal operation.
	NOTE Indicates information not directly related to personal injury but very important for correct installation, operation, and maintenance. Failure to follow it may lead to equipment faults, performance degradation, data loss, or difficulty in subsequent maintenance.
	Hazardous voltage. Risk of electric shock.
	Protective earth connection required.
	Beware of pinch points.

	General mandatory action sign.
	Disconnect before carrying out maintenance or repair.

2.2 Personnel Qualification Requirements

- Unpacking, handling, installation, wiring, commissioning, maintenance, and servicing of the equipment shall be carried out only by qualified professionals who have received appropriate product training.
- Unauthorized personnel shall not open the cabinet, remove protective parts, modify parameters, or perform any repair work.
- Personnel shall be familiar with all applicable local electrical safety regulations, grounding requirements, lockout/tagout (LOTO) procedures, and operating practices for high-voltage equipment.
- During cabinet opening, maintenance, and power-on testing, necessary isolation measures shall be implemented to prevent unauthorized persons from entering the work area.

	DANGER When live inspection, energized commissioning, or internal maintenance is involved, the work must be carried out by properly qualified professionals and strictly follow the procedures for power isolation, lockout, verification of absence of voltage, and discharge.
	WARNING This equipment contains high-voltage electrical components and heavy structural parts. Operation by unqualified personnel may result in electric shock, fire, equipment damage, or personal injury.

2.3 Equipment Use Restrictions

- This equipment is intended for charging electric vehicles that comply with applicable standards, and is suitable for indoor or outdoor locations that meet installation, grid, environmental, and safety requirements.
- Do not install or operate the equipment in flammable or explosive environments, areas with severe water accumulation, corrosive environments, or any other unsafe conditions. Stop using the equipment immediately if any damage, water ingress, abnormal odor, abnormal noise, overheating, or alarm occurs.
- Do not modify the equipment structure, software settings, electrical connections, or protection parameters without the manufacturer's written approval. Do not use unauthorized adapters, extension cords, or other non-specified accessories.

	CAUTION If the equipment has abnormalities, damage, or safety risks, it must not continue to operate.

2.4 Personal Protective Equipment

Depending on the work being performed, personnel shall wear appropriate personal protective equipment (PPE), including but not limited to:

	Protective clothing
	Safety gloves
	Safety helmet
	Safety goggles
	Safety shoes

2.5 Scope of Responsibility and Disclaimer

This equipment shall be transported, installed, wired, commissioned, operated, maintained, and serviced only by qualified personnel in accordance with this manual and all applicable local laws, regulations, standards, and codes. Users, installers, service providers, and other relevant parties shall comply with the safety requirements, operating limitations, PPE requirements, and cybersecurity and data protection requirements specified in this manual.

The manufacturer declares that this equipment complies with the applicable design and regulatory requirements when it is properly transported, installed, used, and maintained. The manufacturer shall not be liable for any personal injury, equipment damage, property loss, operational interruption, data loss, or any other related loss resulting from failure to follow this manual, applicable regulations, or the manufacturer's requirements.

The manufacturer shall not be liable for consequences caused by the following:

1. Improper installation, use, or maintenance
   - Failure to follow this manual or applicable local laws, regulations, standards, and codes.
   - Installation, wiring, commissioning, operation, or maintenance not performed as required.
   - Power supply, grounding, installation environment, or operating conditions that do not meet equipment requirements.
   - Failure to carry out required inspection, testing, maintenance, or fault handling.
   - Misuse, abuse, or use beyond the intended purpose.
2. Unauthorized modification or repair
   - Disassembly, modification, repair, or system changes without the manufacturer's written authorization.
   - Unauthorized changes to product parameters, protection settings, communication settings, software configuration, or control logic.
   - Use of unapproved parts, accessories, tools, or third-party equipment in connection with this product.
3. Damage caused by external or uncontrollable factors
   - Fire, flooding, storms, lightning, earthquakes, chemical leaks, pollution, or other force majeure events.
   - Entry of foreign objects, corrosive substances, moisture, condensation, insects, rodents, or other external factors into the equipment.
   - External power supply abnormalities, grid fluctuations, upstream equipment failures, or third-party system failures.

- Damage, performance degradation, or component failure caused by improper transportation, handling, or storage.

4. Improper or unsafe operation

- Installation, wiring, commissioning, maintenance, or repair by unqualified personnel.
- Failure to wear required PPE or to take necessary safety precautions.
- Live working, improper operation, or forced energization/operation before faults are cleared.
- Continued use of the equipment under abnormal alarm, odor, overheating, smoke, or other abnormal conditions.

5. Cybersecurity, data, or external system issues

- Failure to properly configure user permissions, network connections, passwords, or access control measures.
- Data leakage, communication failures, or system intrusion caused by improper management by the user, operator, or third parties.
- Functional limitations or service interruption caused by failures of the backend platform, network operator, payment platform, or other external systems.

6. Improper disposal

- Failure to dispose of the equipment, batteries, electronic components, or packaging materials in accordance with applicable laws, regulations, and environmental requirements.
- Losses or liabilities arising from improper scrapping, recycling, dismantling, or transfer.

2.6 FCC and IC Remarks

FCC Caution:

Any Changes or modifications not expressly approved by the party responsible for compliance could void the user's authority to operate the equipment.

This device complies with part 15 of the FCC Rules. Operation is subject to the following two conditions: (1) This device may not cause harmful interference, and (2) this device must accept any interference received, including interference that may cause undesired operation.

IMPORTANT NOTE:

Note: This equipment has been tested and found to comply with the limits for a Class A digital

device, pursuant to part 15 of the FCC Rules. These limits are designed to provide reasonable

protection against harmful interference when the equipment is operated in a commercial

environment. This equipment generates, uses, and can radiate radio frequency energy and, if not

installed and used in accordance with the instruction manual, may cause harmful interference to

radio communications. Operation of this equipment in a residential area is likely to cause harmful

interference in which case the user will be required to correct the interference at his own expense.

IC Caution:：

This device complies with Innovation, Science, and Economic Development Canad licence-exempt RSS standard(s).Operation is subject to the following two conditions:

(1) this device may not cause interference, and

(2) this device must accept any interference, including interference that may cause undesired operation of the device.

Le présent appareil est conforme aux CNR d' Innovation, Sciences et Développement économique Canada applicables aux appareils radio exempts de licence. L'exploitation est autorisée aux deux conditions suivantes:

(1) l'appareil nedoit pas produire de brouillage, et

(2) l'utilisateur de l'appareil doit accepter tout brouillage radioélectrique subi, même si le brouillage est susceptible d'en compromettre le fonctionnement.

FCC/IC Radiation Exposure Statement:

This equipment complies with FCC/ISED radiation exposure limits set forth for an uncontrolled environment. This equipment should be installed and operated with minimum distance 20cm between the radiator& your body.

L'appareil est conforme aux limites d'exposition aux rayonnements spécifiées par la FCC/ISED pour les environnements non contrôlés. La distance entre le radiateur et le corps doit être d'au moins 20 cm lors de l'installation et du fonctionnement de l'appareil.

3. Product Introduction

This chapter introduces the overall structure, external appearance, and main functions of the equipment to help users quickly understand the product's basic configuration, operating interface, and the purpose of its key components.

3.1 Overall Appearance and Structure

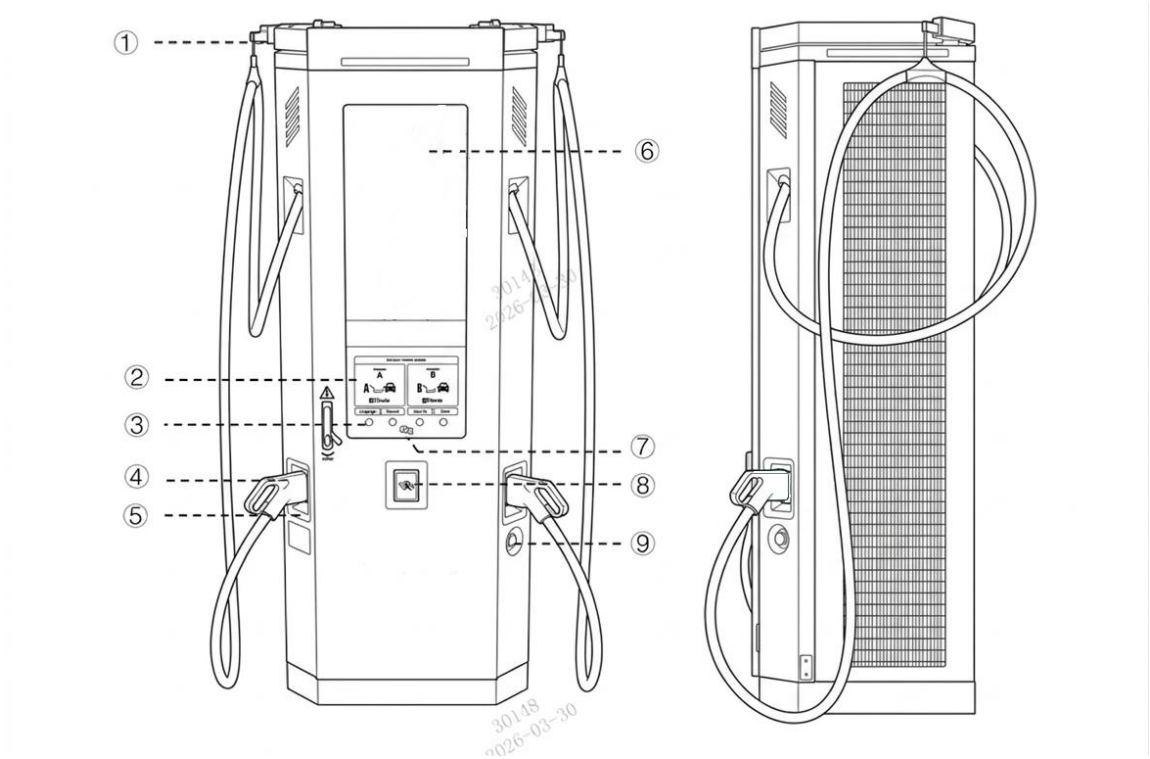

Ref.	Part	Function
①	Cable management system	To support and manage the charging connector and cable, helping reduce cable dragging and wear during operation.
②	Display	Human-machine Interface (HMI)
③	Display's buttons	To interact with the display menu
④	Charging connector-Output A	To connect the Output A of the EVSE to the EV;Optional: NACS Charging Gun or CCS1 Charging Gun
⑤	Connector holder with LED-Output A	To hold the charging connector and show the status of Output A
⑥	Ad screen(optional)	To support high-definition video and image advertisements
⑦	RFID	To read the information from an RFID card
⑧	Payment terminal(optional)	To pay for the charging session
⑨	Emergency stop button (optional)	To manually stop the charging process instantly if any danger is detected.

3.2 Main Components

3.2.1 Core Components

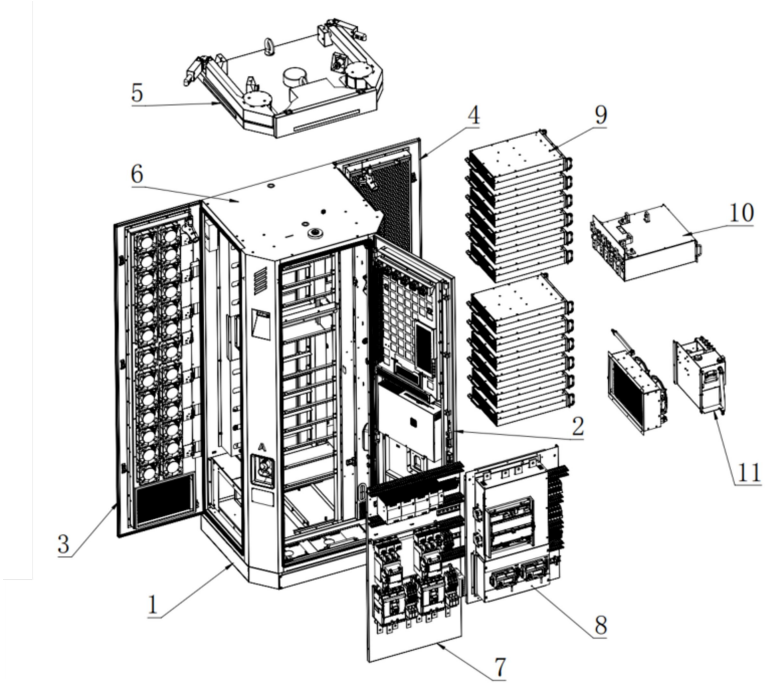

Ref.	Part	Description
1	Base assembly	An auxiliary support assembly used to connect the charger cabinet body to the installation foundation
2	Front door assembly	Includes the human-machine interaction module, advertising display, advertising screen control board, door lock, etc.
3	Left door Assembly	Includes cooling fan 5, waterproof layer, etc.; used for air exhaust
4	Right door Assembly	Includes dust filter cotton, waterproof layer, etc., used for air intake
5	Cable and connector management assembly	Includes the lifting rings, cable management system, and connector-related components; used for equipment lifting, cable support, and connector management during charging operation.
6	Frame assembly	The main cabinet structure of the charger
7	AC component assembly	Includes the AC incoming terminal block, molded case circuit breaker (MCCB), surge protective device (SPD), etc.; mainly used for protection and power supply of the incoming circuit
8	DC control assembly	Includes the energy meter, power controller, and other DC-side control components; used for system control, power regulation, and operating status monitoring.
9	Power module	The AC DC module array cabinet of the charger
10	Dispatch assembly	The five-section busbar distribution assembly on the DC side
11	Liquid cooling assembly	Includes the cooling unit and pump body for heat dissipation of the liquid-cooled charging cable.

3.2.2 Human-Machine Interface

The HMI of this equipment provides both Day Mode and Night Mode. In both modes, the functional layout, displayed information, and operating logic remain the same. The only differences are background color, font color, and UI color scheme, to suit viewing and operation under different ambient light conditions.

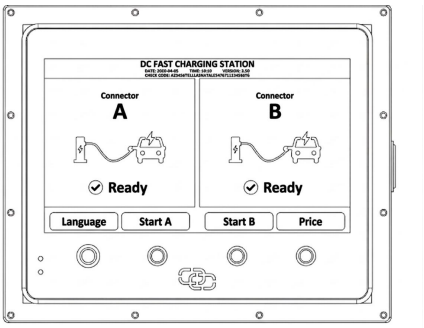

3.2.3 Options

The equipment can be configured with different optional functions and expansion components according to project requirements to meet the needs of different application scenarios related to use, payment, communication, or operation management. Optional items are not part of the standard configuration. The actual scope of supply shall be subject to the order, technical agreement, or product configuration list.

1. Payment Terminal

A payment terminal can be integrated to support user payment during charging. The payment terminal interfaces with the OCPP platform via a cloud-to-cloud method to achieve payment authorization, transaction processing, and status synchronization.

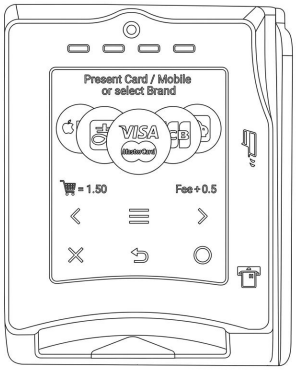

NOTE
To ensure payment security, the equipment owner or site operator should periodically inspect the payment terminal to confirm that its appearance is intact, it is securely fixed, labels are normal, and there are no abnormal openings, exposed cables, suspicious add-ons, or any signs of removal or tampering. If any abnormality is found, stop using the payment terminal immediately and contact service personnel for inspection and handling.

2. Ad Screen

The equipment can integrate a 32-inch ad screen for displaying images, videos, and other visual information. The ad screen can serve as an extended display module for information release, advertising display, or interface content presentation. It operates independently from the charging system and does not participate in charging

control or payment control. Display content, playback mode, and update method are subject to the actual configuration.

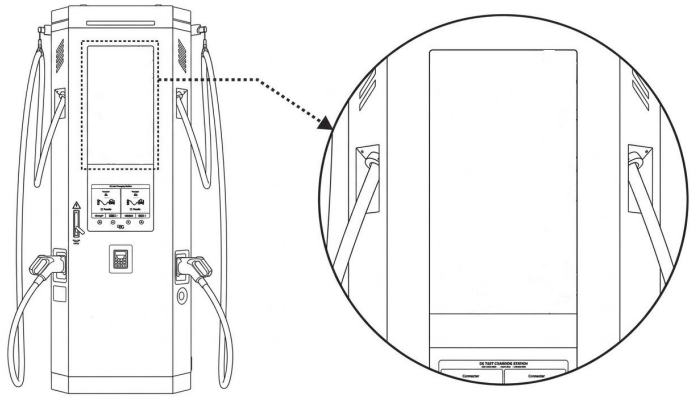

NOTE

To ensure normal use, regularly inspect the appearance and installation status of the ad screen to confirm that the screen surface is intact, the display is normal, and the unit is securely fixed without damage, looseness, or other abnormal conditions. If abnormal display behavior or hardware damage is found, stop using the display function and contact service personnel for inspection and handling.

3. Emergency Stop Button

A Start/Stop button is provided as standard. An emergency stop button is optional and can be configured according to customer requirements. It is mainly used to stop the equipment immediately in case of emergency, abnormal operation, or safety risk.

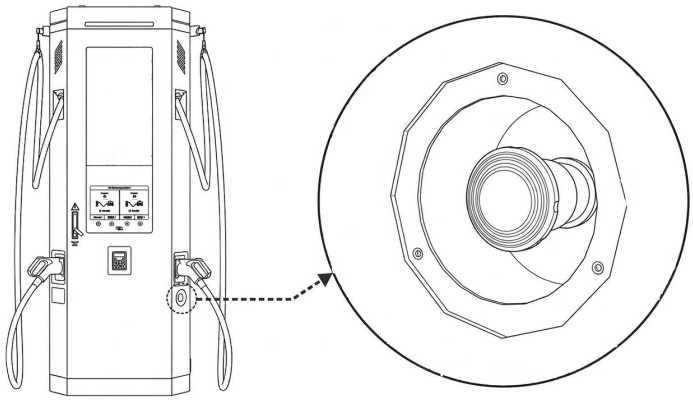

NOTE

- If the emergency stop button is pressed during charging, the AC contactor on the input side and the DC contactor on the output side will be disconnected, and the status indicator will turn red.
- After the fault has been cleared, ensure that it is safe to resume operation, then rotate the emergency stop button clockwise to release it. The charger will then return to normal operation.

4. Transport, Incoming Inspection, and Handling

This chapter describes the requirements from delivery and unpacking inspection to handling before equipment positioning. To avoid damage during transport, loading/unloading, and handling, complete the package inspection, incoming inspection, accessory verification, and handling confirmation in accordance with this chapter. If abnormalities are found, record and handle them promptly, and proceed to the next installation step only after confirmation.

4.1 Packaging and Incoming Inspection

- Check whether the package is damaged, punctured, cracked, deformed, damp, contaminated, or shows signs of tipping.
- Verify that shipping marks, model labels, quantity labels, and project identification marks are clear.
- Verify that the model, quantity, and related information match the purchase order, shipping list, or packing list.

WARNING

- If the outer packaging is severely damaged, obviously wet, or shows signs of heavy impact, do not unpack, install, or energize the equipment until its condition has been confirmed.
- If the delivery information does not match the order or shipping documents, suspend subsequent work and verify it in time.

4.2 Handling Requirements and Precautions

NOTE

- Before handling, confirm the equipment weight, center of gravity, and site access conditions.
- For outdoor handling, take rainproof and moisture-proof measures.

WARNING

- During lifting, personnel must not stay beneath the equipment or within the danger zone.
- During forklift handling, personnel must stay clear of the equipment tip-over risk area.

Wear the personal protective equipment required for the working area.

During handling, strictly follow the symbols shown on the packaging crate:

Symbol	Description
	Fragile
	Keep dry
	This side up
	Do not stack

	Do not tilt
	Handle with care

4.2.1 Forklift Handling

- Before handling, verify that the forklift capacity, fork dimensions, and fork entry positions meet the requirements.
- During handling, ensure that the equipment remains stable and that there is no risk of tilting, collision, or dropping.
- After handling, inspect the external appearance and visible parts of the equipment. Proceed with installation only after confirming that no abnormality is found.

As shown in the figure, the forklift must pick up the charger from the front side（B） of the wooden crate.

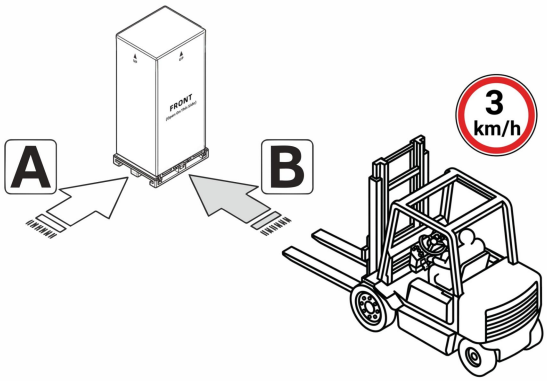

4.2.2 Lifting Handling

When lifting is used, compliant lifting tools, slings, or hooks shall be used. Confirm that the lifting points are reliable, the connections are secure, and the load is balanced. Keep the equipment stable during lifting and positioning. Rapid lifting/lowering, swinging, collision, or diagonal pulling is strictly prohibited.

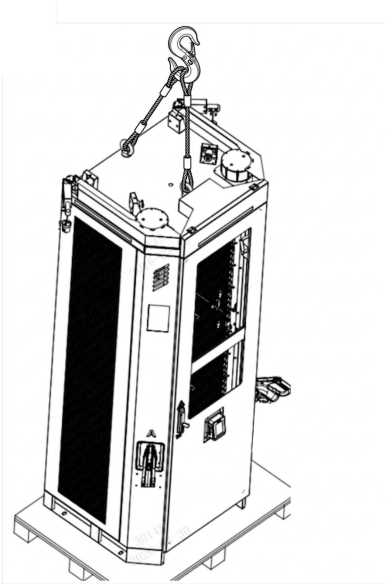

4.3 Unpacking and Packing List

4.3.1 Unpacking Procedure

Please unpack the equipment in accordance with the following steps, and take care to protect the appearance of the equipment and its accessories during the unpacking process.

Step 1: Open the crate side panels

Release the latches to open the cabinet from each side.

NOTE
The door lock uses a removable pin and can be opened without tools.

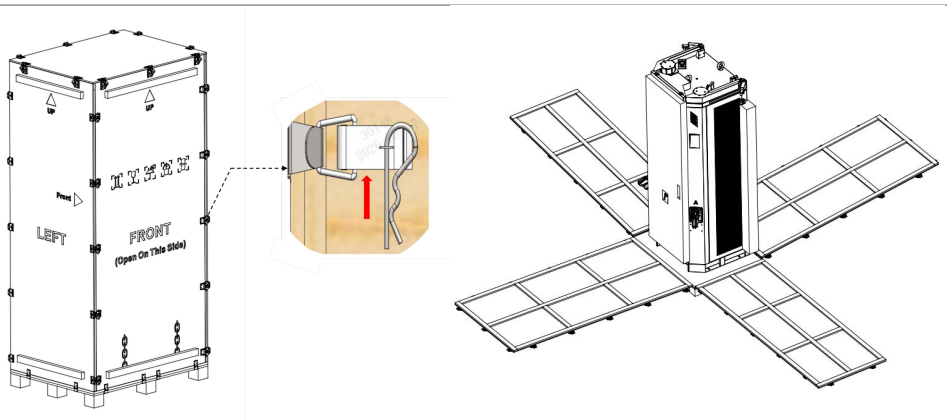

Step 2: Remove all protective materials

Remove all foam protectors and other packaging materials from the equipment surface.

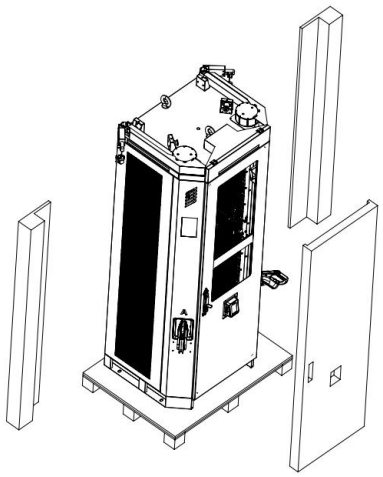

4.3.2 Packing List

After unpacking, check the charging cables, keys, certificate of conformity, installation accessories, manual, and other supplied items against the packing list, and retain the packaging materials for traceability in case of any abnormality.

Component	Description	Quantity
User Manual		1
Factory Inspection Report		1
Packing List		1
Key	To open the front door of EVSE	2
RFID card	To run the charger under local mode	2
Packaging Bag		1
Fireproof putty		1
Keys		2
Desiccant	60G	4

5. Access to the Inside of Charger

5.1 Open/Close the Doors

HAZARDOUS VOLTAGE
Make sure that only qualified persons have access to the door key and is wearing the correct protective clothing as set out above.

Note
For ease of use, the key is usually fixed to the charging cable with a cable tie.

5.1.1 Open/Close the Front Door

Follow the steps shown in the figure to open the front door.

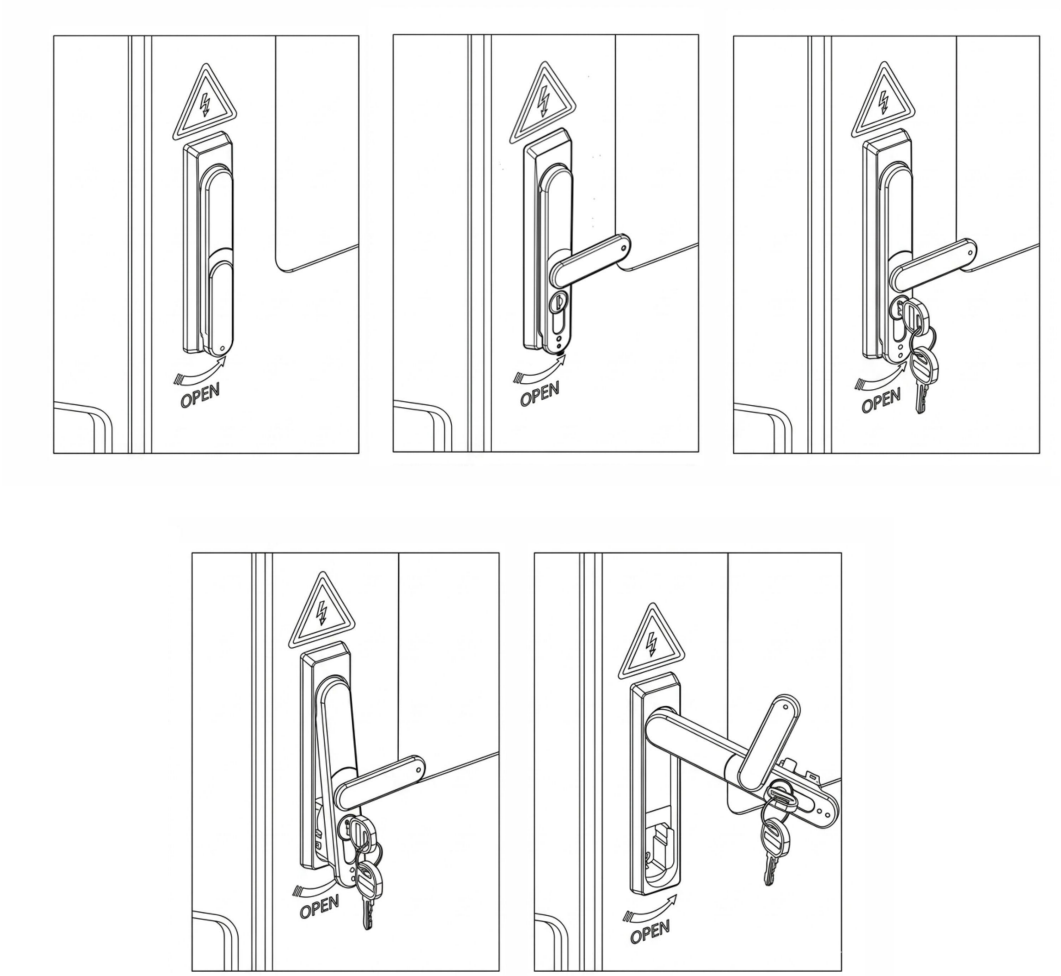

To close the side door, simply reverse the operation.

5.1.2 Open/Close the Side Doors

As shown in the figure, lift the latch at this position upward to open the right-side door. Use the same method to open the left-side door.

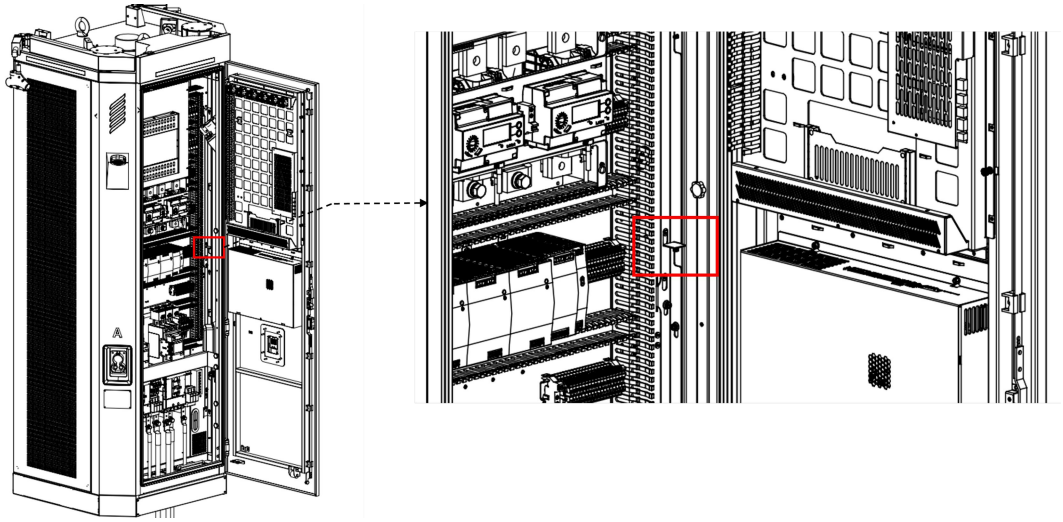

To close the side door, simply reverse the operation.

6. Pre-Installation Preparation

This chapter is used to confirm whether the installation site has the conditions required for construction and equipment operation. Before formal installation, inspect the site environment, foundation and embedded parts, cable routing, and reserved conditions so that installation, wiring, and subsequent commissioning can proceed smoothly.

6.1 Floor Space Requirements

WARNING
- Do not install the equipment in a location with poor ventilation, insufficient space, or inadequate maintenance clearance.
- Do not stack flammable materials, miscellaneous items, or any objects that obstruct heat dissipation or maintenance around the equipment.

CAUTION
- During installation, ensure there are no obstacles around the equipment that affect normal door opening.
- Do not block the air inlet, air outlet, or maintenance working area.
- If multiple units are installed side by side, the minimum clearance requirements between adjacent units must also be met.

Before installation, confirm that sufficient space is reserved on site for handling, installation, door opening, wiring, and heat dissipation. See the figure below for the minimum space requirements.

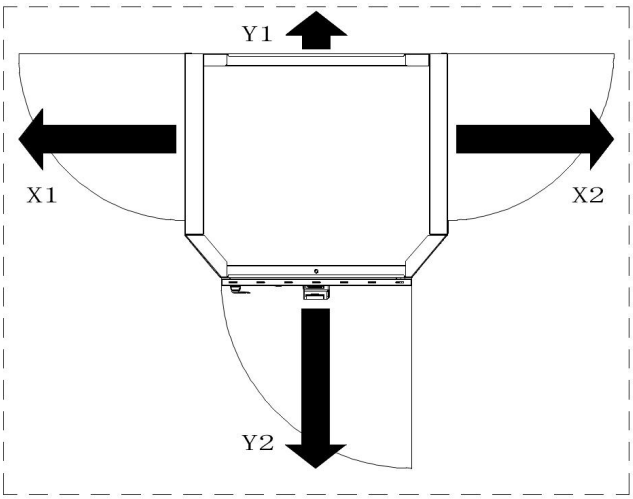

X1 ⩾600
X2 ⩾600
Y1 ⩾150
Y2 ⩾700

6.2 Foundation and Embedded Requirements

6.2.1 Prepare the Foundation

CAUTION

- After concrete pouring is completed, allow sufficient curing and reach the required installation strength before drilling, installing expansion anchors, or fixing the equipment.
- It is recommended that power cables and signal cables be routed through separate embedded conduits.

A concrete foundation meeting the load-bearing requirements shall be provided at the equipment installation location. The length, width, and height of the concrete foundation shown in the figure below are recommended values for reference in on-site foundation construction.

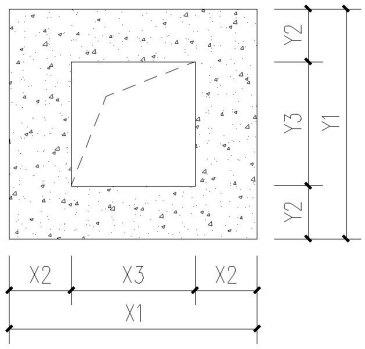

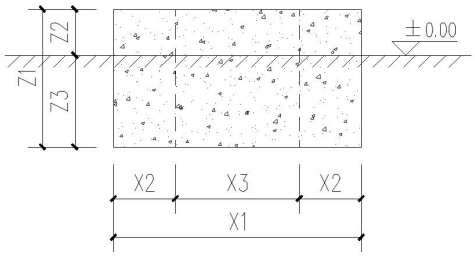

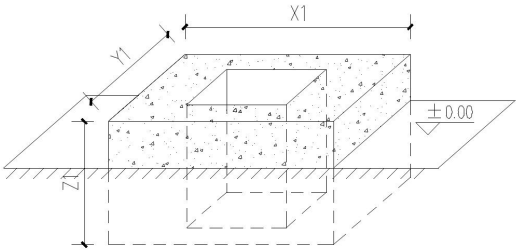

No.	Dimensions (mm)
X1	1080
X2	270
X3	540
Y1	1000
Y2	230
Y3	540
Z1	600
Z2	200
Z3	400

6.3 Cable Routing and Reserved Length

The maximum input current and recommended input cable size for different equipment power ratings are shown in the table below.

NOTE

- Cable size standard: The recommended cable cross-sectional areas (mm²) are the minimum requirements for safe operation. If any of the following conditions apply at the installation site, the cable size shall be increased accordingly to ensure system stability:
  - The total cable routing length exceeds 200 m, with voltage drop taken into account.
  - Heat dissipation conditions are poor, such as in crowded cable trays, enclosed conduits, or high-temperature environments.
- The incoming cable can be either copper or aluminum. Please select one option only.

Model	Power	Cable Size	Terminal
DC-012FA **DC-012FX**	120 kW (upgradable to 160 kW)	Copper cable: (3×95+1×50)×1 Aluminum cable: (3×120+1×70)×1	Copper cable: (SC/DT 95-8)×3 + (SC/DT 50-8)×1 / Aluminum cable: (SC/DT 120-8)×3 + (SC/DT 70-8)×1
DC-016FA **DC-016FX**	160 kW	Copper cable: (3×95+1×50)×1 / Aluminum cable: (3×120+1×70)×1	Copper cable: (SC/DT 95-8)×3 + (SC/DT 50-8)×1 / Aluminum cable: (SC/DT 120-8)×3 + (SC/DT 70-8)×1
DC-024FA **DC-024FX**	240 kW (upgradable to 320 kW)	Copper cable: (3×95+1×50)×1 Aluminum cable: (3×120+1×70)×1	Copper cable: (SC/DT 95-8)×3 + (SC/DT 50-8)×1 / Aluminum cable: (SC/DT 120-8)×3 + (SC/DT 70-8)×1
DC-032FA **DC-032FX**	320 kW	Copper cable: (3×95+1×50)×1 Aluminum cable: (3×120+1×70)×1	Copper cable: (SC/DT 95-8)×3 + (SC/DT 50-8)×1 Aluminum cable: (SC/DT 120-8)×3 + (SC/DT 70-8)×1
DC-032LA **DC-032LX**	320 kW (upgradable to 480 kW)	Copper cable: (3×150+1×95)×1 Aluminum cable: (3×240+1×120)×1	Copper cable: (SC/DT 150-10)×3 + (SC/DT 95-10)×1 Aluminum cable: (SC/DT 240-10)×3 + (SC/DT 120-8)×1
DC-040LA **DC-040LX**	400 kW (upgradable to 480 kW)	Copper cable: (3×150+1×95)×1 Aluminum cable: (3×240+1×120)×1	Copper cable: (SC/DT 150-10)×3 + (SC/DT 95-10)×1 Aluminum cable: (SC/DT 240-10)×3 + (SC/DT 120-8)×1
DC-048LA **DC-048LX**	480 kW	Copper cable: (3×150+1×95)×1 Aluminum cable: (3×240+1×120)×1	Copper cable: (SC/DT 150-10)×3 + (SC/DT 95-10)×1 Aluminum cable: (SC/DT 240-10)×3 + (SC/DT 120-8)×1

The cables shall be routed through the concrete foundation and extend out from the top of the foundation, as shown in the figure below. Make sure the cables are neatly arranged for subsequent installation and wiring.

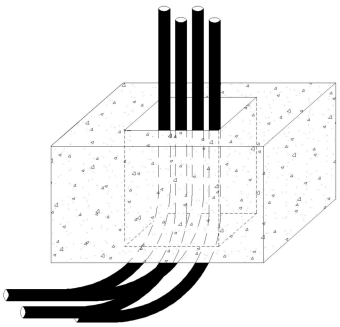

6.4 Recommended Tools

Before installing this equipment, it is recommended to prepare the following tools for electrical wiring and electrical testing.

No.	Tools	Schematic Picture	Main Uses
1	Multimeter		Check the electrical connection and measure the voltage
2	Electric Impact drill		Drill fixing holes in the wall
3	Wrench		Fastening bolt
4	Diagonal plier		Cut the cable
5	Wire stripper		Peeling cables
6	Crimping plier		Pressed cable terminal
7	Cross screwdriver		Fastening screw

7. Equipment Installation

This chapter describes the requirements for equipment positioning, fixing, and post-installation inspection.

7.1 Positioning and Fixing

There is a risk of pinching and crushing during lowering and positioning of the equipment.

CAUTION
- Before lifting the equipment, confirm that all cabinet doors are closed and locked.
- Check that all cables are free from kinks, twisting, crushing, or excessive bending.
- Lower and position the equipment slowly and steadily to avoid swinging, collision, or sudden dropping.

Ensure that cables are not trapped between the equipment and the base, and that they are aligned correctly with the AC and PE terminals.

7.2 Post-Installation Inspection

After the equipment has been lifted or moved to the foundation position, correct its orientation and levelness, and tighten the anchor bolts or fasteners as required.

Inspection Item	Inspection Details
Fixing condition	Base bolts, anchor bolts, and installation fasteners are secured in place; the equipment has no looseness or shaking.
Level condition	The equipment is installed steadily without obvious inclination.
Cable routing	Power cables, PE cables, communication cables, and other cables are neatly routed without crushing, twisting, excessive bending, or squeezing.
Marking inspection	Cable labels, phase sequence labels, and function labels are clear and complete.

8. Electrical Connection

This chapter is a key part of on-site construction. Electrical connection work shall be carried out by qualified professionals in combination with the actual electrical schematic, wiring diagram, terminal definitions, and torque requirements.

WARNING
- Before electrical connection work, confirm that the upstream power supply has been disconnected and necessary measures have been taken to prevent inadvertent energization.
- Live wiring, wire removal, or terminal tightening is strictly prohibited.

CAUTION
- Before electrical connection, verify that the equipment nameplate parameters match the on-site power conditions.
- Terminal tightening shall meet the specified torque requirements and must not be excessively tight or loose.

NOTE
- Before formal wiring, it is recommended to re-check cable specification, wire order, phase sequence, and terminal definitions.
- For important wiring points, it is recommended to perform a secondary inspection and retain necessary test records.

Protective earth connection required.

8.1 AC Input Connection

Connect the AC input cables according to terminal markings, and crimp terminals, tighten bolts, and verify torque as required.

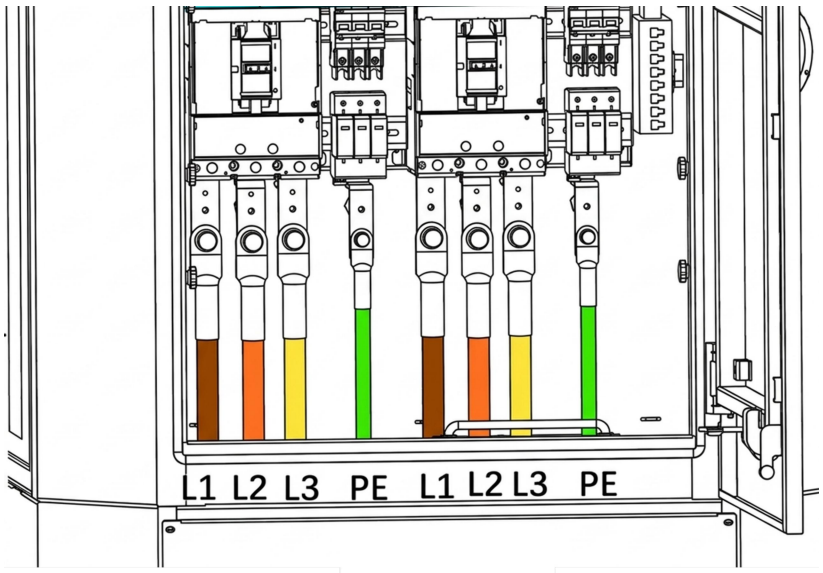

8.2 Communication Connection

Complete the connection of the Ethernet, 4G/5G, or other communication interfaces as shown in the figure.

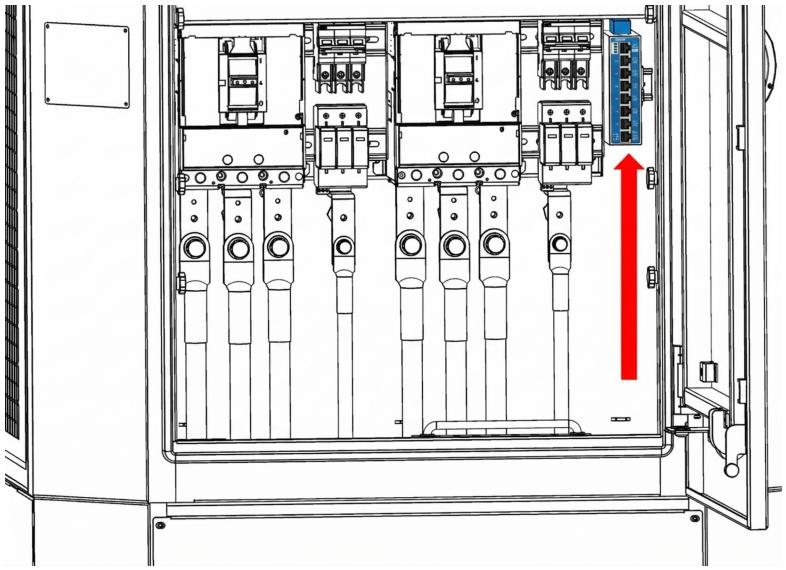

9. Commissioning and Initial Operation

This chapter describes the first energization, parameter setting, and trial charging verification process. After the mechanical installation and electrical connection are complete, carry out the pre-energization checks, parameter confirmation, and functional verification required in this chapter to ensure that the equipment is ready for safe operation.

WARNING
- Do not energize the equipment for commissioning before the pre-power-on inspection has been completed.
- If abnormal wiring, failed insulation, abnormal grounding, or foreign objects left inside the cabinet are found, energization is strictly prohibited.
- If abnormal odor, abnormal noise, smoke, or severe alarms occur during commissioning, immediately disconnect power and inspect the equipment.

CAUTION
- Before commissioning, confirm that mechanical installation, electrical wiring, and grounding inspections have all been completed.
- Before first energization, complete insulation testing, grounding continuity testing, and necessary electrical inspections.
- Commissioning personnel shall be familiar with the operating interface, parameter setting methods, and emergency power-off measures.

9.1 Power-On Steps

WARNING
Confirm that no one is performing wiring or dismantling work around the equipment.

- Close the upstream circuit breaker or power supply switch.
- Follow the steps shown in the figure to turn on the corresponding switches in sequence.

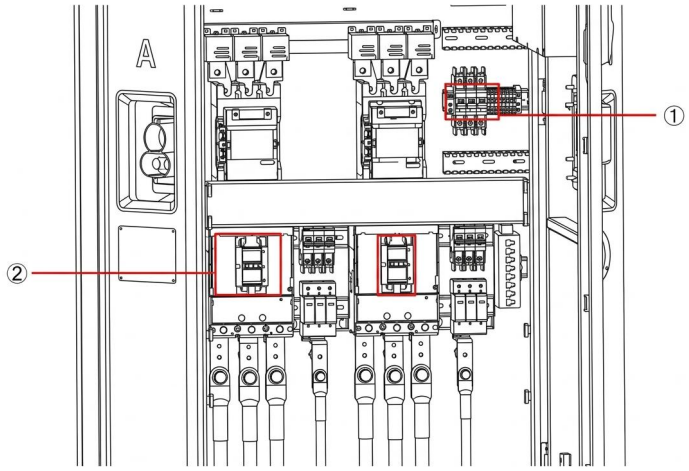

- Observe the equipment display and status indicators.

Color	LED State	Satellite Status
Green	Solid	Charging
Blue	Solid	Idle
White	Blinking	Reserved
Red	Solid	Fault

- Check for fault alarms, abnormal sound, odor, or tripping.
- Confirm that the equipment enters the normal standby or initialization screen.

9.2 Basic Parameter Settings

- Double-click the center of the DC FAST CHARGING STATION text to enter the engineer interface for basic parameter settings.

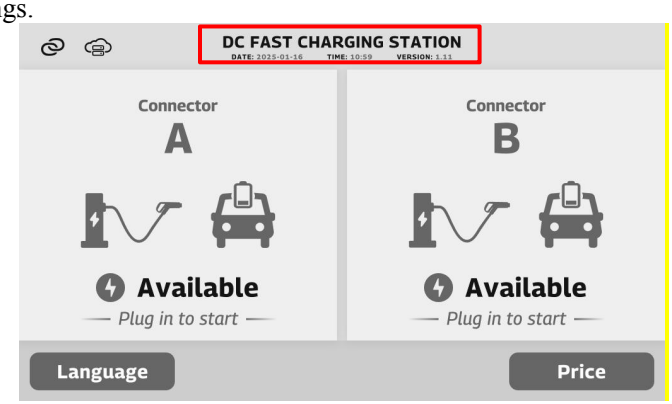

- Enter password

- As shown below, further configuration can be performed in the engineer interface.

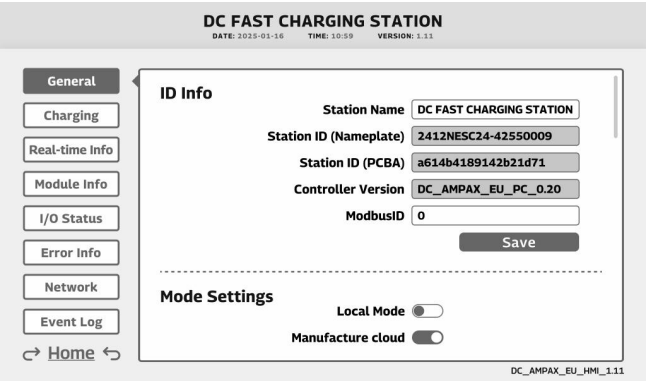

9.3 Charging Procedure

The touchscreen display during normal charging is shown below.

Standby status

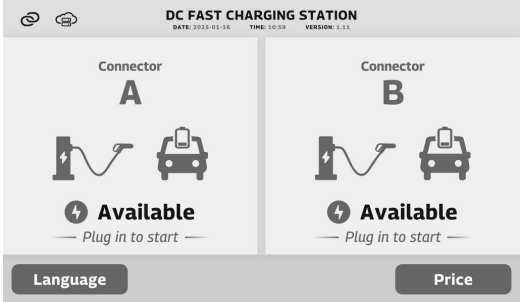

Connected status

- Select connector for charging;
- Click “Start A”/ “Start B” button to start.

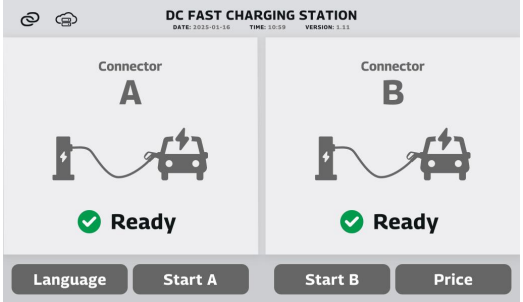

Start charging authorization

- Swipe RFID card, tap a credit card on the POS terminal, or scan the QR code with the APP to start charging

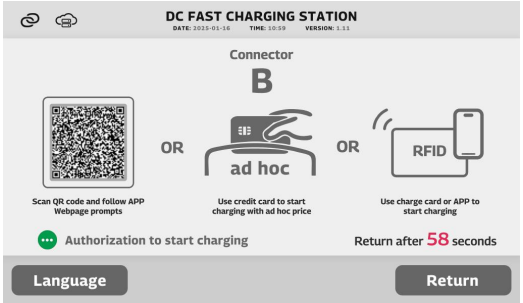

Authorization successful

- Wait for charging

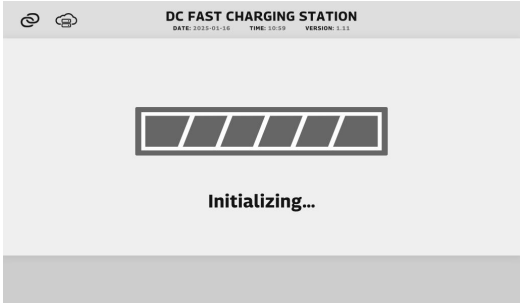

Charging state

- Click “Stop Charging” to end charging

Stop charging

- Confirm to stop charging

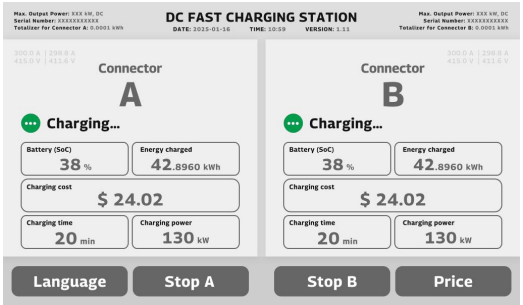

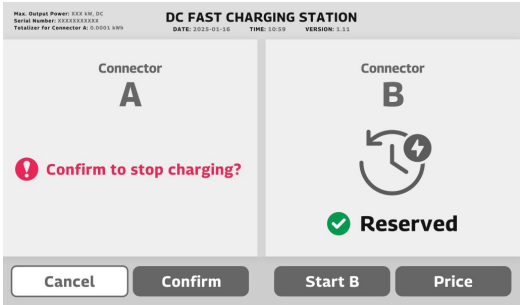

Stop charging authorization

- Swipe RFID card, tap a credit card on the POS terminal, or scan the QR code with the APP to end charging

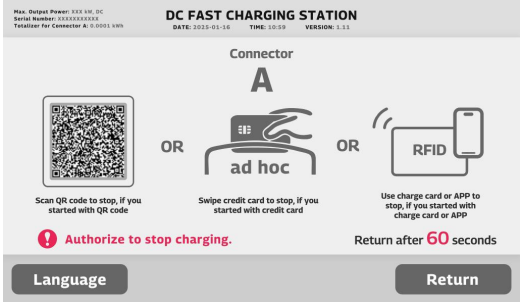

Charging complete

- Display charging bill

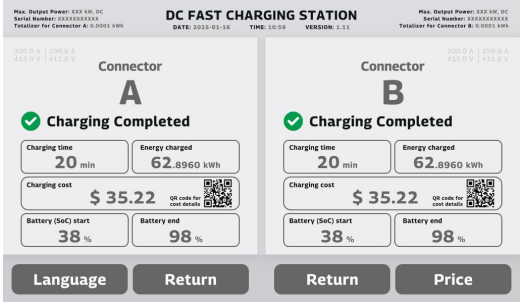

10. Maintenance and Troubleshooting

10.1 Routine Inspection and Maintenance Recommendations

To ensure safe and reliable operation of the equipment, routine inspection and maintenance are recommended at regular intervals.

Disconnect before carrying out maintenance or repair.

10.1.1 External Inspection

Inspection Item	Inspection Criteria	Frequency
Environment	Check whether the surrounding area is clean and free from debris, standing water, or other abnormal conditions.	Once every 3 months
Appearance	Check whether the enclosure is clean and free from damage, deformation, or corrosion.	Once every 3 months
Charging Cable	Check for wear, cracks, cuts, looseness, or other damage.	Once every 3 months
Operating Sound	Check for any abnormal sound during operation.	Once every 3 months
Touchscreen	Check whether the touchscreen operates normally.	Once every 3 months
Fan	Check whether the fan operates normally.	Once every 3 months
Filter	Check whether the filter is clean; clean or replace it if necessary.	Once every 3 months
Small Animal Intrusion	Inspect the cabinet for any intrusion by insects, rodents, or other small animals.	Once every 3 months
Cable Condition	Check whether any cable shows signs of overheating, burning, discoloration, looseness, or damage.	Once every 3 months

10.1.2 Internal Inspection

Before performing internal inspection, disconnect the power supply and follow all applicable safety procedures.

Inspection Item	Inspection Criteria	Frequency
Fuse	Check whether the fuse is in good condition and functions properly.	Once every 3 months
Fastening Screws	Check whether any screws are loose or missing.	Once every 3 months
Water Ingress	Check whether there is any water leakage, moisture, or condensation inside the cabinet.	Once every 3 months
Power Module	Check whether the power modules operate normally.	Once every 3 months
Internet Connection	Check whether the communication/network connection functions normally.	Once every 3 months
Charging Test	Perform a charging test to verify normal charging operation; a test duration of up to 10 minutes is recommended.	Once every 3 months

10.2 Common Fault Troubleshooting

Fault Code	Fault Information	Troubleshooting
1101	Door Access Protection	● Reopen the cabinet door and close it correctly. ● Check the connected wires of cabinet door switch.
1102	Emergency Stop	● Step 1. Check the emergency stop button. If it is pressed, turn off the power and check if there are any abnormalities in the cabinet, such as odor, water immersion, etc. ● Step 2. If all faults are excluded, rotate the emergency stop button clockwise to reset it.
1103	K1/K2 Fault	● Try charging again, if the fault still occurs, the related components may be damaged. ● Replace the K1/K2 relay
1812	Surge Protection Fault	● Check the observation window of SPD. If the SPD turns red, it should be replaced. ● Check whether the auxiliary contact connection is reliable.
1119	AC Contactor Fault	● Reboot the input power, if the error persists, the AC Contactor may be damaged. ● Replace the AC Contactor.
1201	Power Module Comm Fault	● Check whether the communication cable connection to the power module is reliable. ● If the fault comes from the power module, then replace the power module.
1202	Energy Meter Comm Fault	● Check whether the communication cable connection of the energy meter is reliable. ● If the fault comes from the energy meter, then replace the energy meter.
1304	DC Output Overvoltage	● Check whether the threshold value set on the parameter setting interface is correct.
1307	High Ambient Temperature	● Check whether the air inlet/outlet on the left and right sides of the cabinet are blocked. ● Use non-contact temperature measuring equipment to check whether any components inside the cabinet are

		overheated due to abnormal heating. ● If none of the above occurs, open the cabinet door to dissipate heat before restart the charger.
1308	Insulation Fault	● If the insulation fault is from the charging electric vehicle, the fault happens. Try another electric vehicle to verify. ● Power off the main MCCB and reboot to observe if the fault disappears again. ● Check whether the PE connection is reliable.
1310	DC Contactor Ex-voltage > 60V	● This fault can come from the charging vehicle. Try another electric vehicle to verify first. ● If the vehicle is normal, then replace the power module.
1313	CP Voltage Abnormal	● Check whether the connection of the charging cable is reliable. ● This fault can come from the charging vehicle. Try another electric vehicle to verify.
1314	Charging Cable Over Temperature	● Check whether the threshold value of cable temperature set on the parameter setting interface is correct. ● Check whether the connection of the charging cable is reliable.

10.3 Safe Shutdown and Power-Off Procedure

WARNING
Do not touch internal electrical components before confirming that the equipment is completely de-energized

Before maintenance or inspection, make sure the charging session has ended and the vehicle is disconnected. As shown in the figure, switch off **MCCB (①)** first, and then switch off **(②)**. Confirm that the charger is fully powered off before carrying out any further work.

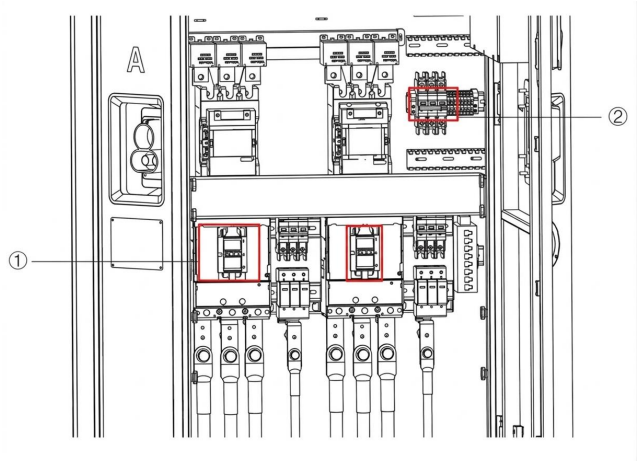

11. Technical Data and Appendix

11.1 Technical Data Table

Soneil Spark DC Charger

DC Output	Output Power	Configurable as 480 kW, 400 kW, 320 kW, 240 kW, 160 kW, 120 kW; Upgradable from 240 kW to 320 kW or 320 kW to 480 kW
	Power Module	40kW SiC
	Dynamic Power Sharing	Minimum adjustable power 40–80 kW
	Output Voltage	150–1000 V
	Output Current (Nominal)	CCS1/CCS2: 350–400A, 600A; J3400 (NACS): 375A, 600A; GBT: 300A, 600A
	Number of Outlets	Dual Outlet
	Power Conversion Efficiency	Up to 97%
AC Input	Nominal Voltage	(CE): 400 Vac ±10%; (NA): 480 Vac ±10%
	Frequency	50/60 Hz
	Power Factor	>0.99 at full load
Customer Interface	Display	15.6" HD LCD; (Optional) Type: 32" HD full-color LCD for Advertising
	Languages	English, French, Spanish, German, Italian
	Connector Options	CCS1/CCS2 air cooling / liquid cooling options; J3400 (NACS) air-cooling / liquid cooling options; GBT air-cooling / liquid cooling options
	Cable Management	2 Self-retracting Swing Arms (Enclosure Integrated)
	Cable Length	5m (Reach: 4.8) / 7.5m (Reach: 6.1m)
	Lighting	Roof: 270° RGB strips; Bevels: LED indicators; Gun holder: RGB
	Authentication Methods	RFID, Plug&Charge (ISO 15118), Credit/Debit Card, Mobile App
	RFID System	ISO 14443 A/B, and ISO/IEC 15693
Operating	Temperature	Operating from -30°C to 55°C with derating from 50°–55°; Storage from -40°C to 70°C; IEC 60721-3-2

Conditions	Altitude	2000m (6562ft)
	Humidity	Up to 95%, non-condensing
	Noise Level	<65db
	Impact Resistance	IK10, NEMA 3R
	IP Rating	IP54
Form Factor	Dimensions of Charger Body	H x W x D = 2250 x 850 x 750 mm
	Accessibility	Meets ADA Requirements
	Enclosure Type	Stainless Steel
Standards & Compliance	Safety Certifications	(CE): CE, CB, UKCA; (NA): CSA, FCC/IC, Energy Star
	Metering	(CE): MID; (NA): CTEP/NTEP
	EMC	(CE): IEC 61851-21-2; (NA): FCC 47 CFR Part 15B (Class A)
	Network Connections	(Optional) Dual 4G/5G, Wi-Fi, Ethernet (10/100 Base-T)
	OCPP	1.6J and 2.0.1
	Vehicle Communication Protocol	DIN SPEC 70121, ISO 15118-2, ISO 15118-3, Plug & Charge
	RED Directive	ETSI EN 300 330, ETSI EN 301 489-1, ETSI EN 301 489-3, ETSI EN 301 489-52, ETSI EN 301 908-13, EN 50364 (RFID), IEC 62311: 2019, EN IEC 62311: 2020 (4G test)
	Standard Warranty	2 years + SLA Package
	Others	Site Level EMS Control

11.2 Overall Dimensions
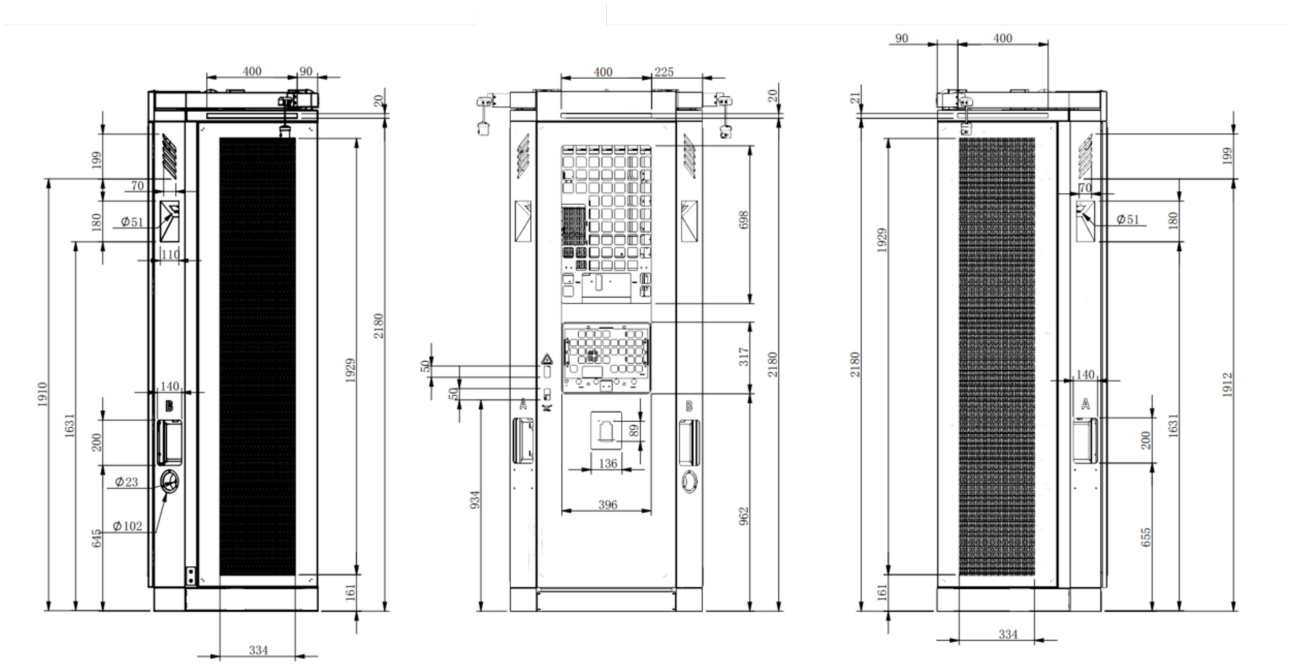
Unit: mm