FCC PART 15 SUBPART C TEST REPORT

FCC PART 15.249

Report Reference No.....	**: MAX260209112P01-R01**
FCC ID.....	**: 2BC5F-HH-7301Y**
Compiled by (position+printed name+signature)..	: Engineer/ Cindy Zheng
Supervised by (position+printed name+signature)..	: Manager/Haley Wen
Approved by (position+printed name+signature)..	: RF Manager/ Vivian Jiang
Date of issue	: February 13, 2026

Testing Laboratory Name	: **MAXLAB Testing Co.,Ltd.**
Address	: 1/F, Building B, Xinshidai GR Park,Shiyan Street, Bao'an District, Shenzhen,Guangdong, 518052, People’s Republic of China
Applicant’s name	: **Henan Honghui Electronic Technology Co., Ltd**
Address	: NO.20, 4/F ,Building 1, NO36, Hong song road, High-techzone, zhengzhou, China
Test specification	:
Standard	: **FCC CFR Title 47 Part 15 Subpart C Section 15.249** **ANSI C63.10-2020+Cor.1-2023+C63.10a-2024**

MAXLAB Testing Co.,Ltd.All rights reserved.
This publication may be reproduced in whole or in part for non-commercial purposes as long as the MAXLAB Testing Co.,Ltd. is acknowledged as copyright owner and source of the material. MAXLAB Testing Co.,Ltd. takes no responsibility for and will not assume liability for damages resulting from the reader's interpretation of the reproduced material due to its placement and context.

Equipment description.....	**: Remote Control**
Trade Mark	: 鸿珲电子
Manufacturer	: Henan Honghui Electronic Technology Co., Ltd
Model/Type reference	: HH-7301Y
Listed Models	: HH-7311Y, HH-7321Y, HH-7322Y, HH-7323Y, HH-7325Y, HH-7326Y, HH-7328Y, HH-7330Y
Modulation	: GFSK
Frequency	From 2421MHz to 2463MHz
Ratings	: DC 3.0V from battery
Result	: **PASS**

TEST REPORT

Equipment under Test	**:**	**Remote Control**
Model /Type	:	HH-7301Y
Listed Models	:	HH-7311Y, HH-7321Y, HH-7322Y, HH-7323Y, HH-7325Y, HH-7326Y, HH-7328Y, HH-7330Y
Model Declaration	:	All the models are electrical identical including the same software parameter and hardware design, same mechanical structure and design, the only difference is the model named different.
Applicant	**:**	**Henan Honghui Electronic Technology Co., Ltd**
Address	:	NO.20, 4/F ,Building 1, NO36, Hong song road, High-techzone, zhengzhou, China
Manufacturer	**:**	**Henan Honghui Electronic Technology Co., Ltd**
Address	:	NO.20, 4/F ,Building 1, NO36, Hong song road, High-techzone, zhengzhou, China

Test Result:	**PASS**

The test report merely corresponds to the test sample.
It is not permitted to copy extracts of these test result without the written permission of the test laboratory.

Contents

1 TEST STANDARDS 4

2 SUMMARY 5

2.1 General Remarks 5
2.2 Product Description 5
2.3 Equipment Under Test 5
2.4 Short description of the Equipment under Test (EUT) 5
2.5 EUT operation mode 6
2.6 Block Diagram of Test Setup 6
2.7 Related Submittal(s) / Grant (s) 6
2.8 Modifications 6

3 TEST ENVIRONMENT 7

3.1 Address of the test laboratory 7
3.2 Test Facility 7
3.3 Environmental conditions 7
3.4 Summary of measurement results 8
3.5 Statement of the measurement uncertainty 8
3.6 Equipments Used during the Test 9

4 TEST CONDITIONS AND RESULTS 11

4.1 AC Power Conducted Emission 11
4.2 Radiated Emissions and Band Edge 12
4.3 Bandwidth of Frequncy Band Edge 15
4.4 Channel Bandwidth 22
4.5 Antenna Requirement 25

5 TEST SETUP PHOTOS OF THE EUT 27

6 PHOTOS OF THE EUT 28

1 TEST STANDARDS

The tests were performed according to following standards:

FCC Rules Part 15.249: Frequency Hopping, Direct Spread Spectrum and Hybrid Systems that are in operation within the bands of 902-928 MHz, 2400-2483.5 MHz, and 5725-5850 MHz and 24.0-24.25 GHz
ANSI C63.10-2020+Cor.1-2023+C63.10a-2024: American National Standard for Testing Unlicensed Wireless Devices

2 SUMMARY

2.1 General Remarks

Date of receipt of test sample	:	February 1, 2026
Testing commenced on	:	February 1, 2026
Testing concluded on	:	February 13, 2026

2.2 Product Description

Product Description:	Remote Control
Model/Type reference:	HH-7301Y
Listed Models:	HH-7311Y, HH-7321Y, HH-7322Y, HH-7323Y, HH-7325Y, HH-7326Y, HH-7328Y, HH-7330Y
Power supply:	DC 3.0V from battery
Adapter information (Auxiliary test supplied by testing Lab):	N/A
Testing sample ID:	MAX260209112P01-R01-1# (Engineer sample) MAX260209112P01-R01-2# (Normal sample)
2.4G	
Supported type:	2.4G
Modulation:	GFSK
Operation frequency:	2421MHz to 2463MHz
Channel number:	6
Channel separation:	/
Antenna type:	PCB antenna
Antenna gain:	0 dBi

2.3 Equipment Under Test

Power supply system utilised

Power supply voltage	:	○	230V / 50 Hz	○	120V / 60Hz
		○	12 V DC	○	24 V DC
		●	Other (specified in blank below)		

DC 3.0V from battery

2.4 Short description of the Equipment under Test (EUT)

This is a Remote Control.
For more details, refer to the user's manual of the EUT.

2.5 EUT operation mode

The Applicant provides communication tools software(Engineer mode) to control the EUT for staying in continuous transmitting (Duty Cycle more than 98%) and receiving mode for testing .There are 6 channels provided to the EUT and Channel 1/3/6 were selected to test.

Operation Frequency：

Channel	Frequency (MHz)
1	2421
2	2425
3	2445
4	2450
5	2459
6	2463

2.6 Block Diagram of Test Setup

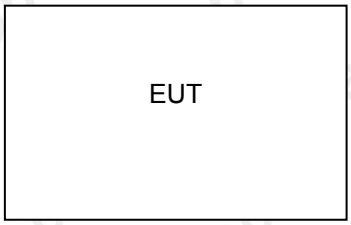

2.7 Related Submittal(s) / Grant (s)

This submittal(s) (test report) is intended for the device filing to comply with Section 15.249 of the FCC Part 15, Subpart C Rules.

2.8 Modifications

No modifications were implemented to meet testing criteria.

3 TEST ENVIRONMENT

3.1 Address of the test laboratory

MAXLAB Testing Co.,Ltd.
1/F, Building B, Xinshidai GR Park,Shiyan Street, Bao'an District, Shenzhen,Guangdong, 518052, People's Republic of China

3.2 Test Facility

FCC-Registration No.: 562200 Designation Number: CN1338
BSL Testing Co.,Ltd. has been listed on the US Federal Communications Commission list of test facilities recognized to perform electromagnetic emissions measurements.

Industry Canada Registration Number. Is: 11093A CAB identifier: CN0019
The Laboratory has been registered by Certification and Engineering Bureau of Industry Canada for radio equipment testing.

A2LA-Lab Cert. No.: 4707.01
BSL Testing Co.,Ltd. has been listed by American Association for Laboratory Accreditation to perform electromagnetic emission measurement.

The 3m-Semi anechoic test site fulfils CISPR 16-1-4 according to ANSI C63.10 and CISPR 16-1-4:2010.

3.3 Environmental conditions

During the measurement the environmental conditions were within the listed ranges:
Radiated Emission:

Temperature:	23 ° C
Humidity:	44 %
Atmospheric pressure:	950-1050mbar

AC Main Conducted testing：

Temperature:	24 ° C
Humidity:	47 %
Atmospheric pressure:	950-1050mbar

Conducted testing：

Temperature:	24 ° C
Humidity:	46 %
Atmospheric pressure:	950-1050mbar

3.4 Summary of measurement results

FCC Part15 (15.249) , Subpart C			
Standard Section	Test Item	Judgment	Remark
FCC part 15.203	Antenna requirement	PASS	
FCC part 15.207	AC Power Line Conducted Emission	N/A	
FCC part 15.249	Fundamental &Radiated Spurious Emission Measurement	PASS	
FCC part 15.215	20dB Channel Bandwidth	PASS	
FCC part 15.205	Band Edge	PASS	

Remark:
1. The measurement uncertainty is not included in the test result.
2. We tested all test mode and recorded worst case in report
3. " N/A" denotes test is not applicable in this Test Report

3.5 Statement of the measurement uncertainty

The data and results referenced in this document are true and accurate. The reader is cautioned that there may be errors within the calibration limits of the equipment and facilities. The measurement uncertainty was calculated for all measurements listed in this test report acc. to TR-100028-01" Electromagnetic compatibility and Radio spectrum Matters (ERM);Uncertainties in the measurement of mobile radio equipment characteristics; Part 1" and TR-100028-02 "Electromagnetic compatibility and Radio spectrum Matters (ERM);Uncertainties in the measurement of mobile radio equipment characteristics; Part 2 " and is documented in the MAXLAB Testing Co.,Ltd.quality system acc. to DIN EN ISO/IEC 17025. Furthermore, component and process variability of devices similar to that tested may result in additional deviation. The manufacturer has the sole responsibility of continued compliance of the device.

Hereafter the best measurement capability for MAXLAB Testing Co.,Ltd.:

Test	Range	Measurement Uncertainty	Notes
Radiated Emission	9KHz~30MHz	3.82 dB	(1)
Radiated Emission	30~1000MHz	4.06 dB	(1)
Radiated Emission	1~18GHz	5.14 dB	(1)
Radiated Emission	18-40GHz	5.38 dB	(1)
Conducted Disturbance	0.15~30MHz	2.14 dB	(1)
Transmitter power conducted	1~40GHz	0.57 dB	(1)
Conducted spurious emission	1~40GHz	1.60 dB	(1)
OBW	1~40GHz	25 Hz	(1)

(1) This uncertainty represents an expanded uncertainty expressed at approximately the 95% confidence level using a coverage factor of k=2.

3.6 Equipments Used during the Test

Conducted Emission					
Test Equipment	**Manufacturer**	**Model**	**Serial No.**	**Date of Cal.**	**Due Date**
Shielding Room	ZhongYu Electron	7.3(L)x3.1(W)x2.9(H)	MAX252	2025-10-28	2026-10-27
EMI Test Receiver	R&S	ESCI 7	MAX552	2025-10-28	2026-10-27
Coaxial Switch	ANRITSU CORP	MP59B	MAX225	2025-10-28	2026-10-27
ENV216 2-L-V-NETZNACHB.DE	ROHDE&SCHWARZ	ENV216	MAX226	2025-10-28	2026-10-27
Coaxial Cable	MAX	N/A	MAX227	N/A	N/A
EMI Test Software	AUDIX	E3	N/A	N/A	N/A
Thermo meter	KTJ	TA328	MAX233	2025-10-28	2026-10-27
Absorbing clamp	Elektronik-Feinmechanik	MDS21	MAX229	2025-10-28	2026-10-27
LISN	R&S	ENV216	308	2025-10-28	2026-10-27
LISN	R&S	ENV216	314	2025-10-28	2026-10-27

Radiation Test equipment					
Test Equipment	**Manufacturer**	**Model**	**Serial No.**	**Date of Cal.**	**Due Date**
3m Semi- Anechoic Chamber	ZhongYu Electron	9.2(L)*6.2(W)* 6.4(H)	MAX250	2025-10-28	2026-10-27
Control Room	ZhongYu Electron	6.2(L)*2.5(W)* 2.4(H)	MAX251	N/A	N/A
EMI Test Receiver	Rohde & Schwarz	ESU26	MAX203	2025-10-28	2026-10-27
BiConiLog Antenna	SCHWARZBECK MESS-ELEKTRONIK	VULB9163	MAX214	2025-10-28	2026-10-27
Double -ridged waveguide horn	SCHWARZBECK MESS-ELEKTRONIK	BBHA 9120 D	MAX208	2025-10-28	2026-10-27
Horn Antenna	ETS-LINDGREN	3160	MAX217	2025-10-28	2026-10-27
EMI Test Software	AUDIX	E3	N/A	N/A	N/A
Coaxial Cable	MAX	N/A	MAX213	2025-10-28	2026-10-27
Coaxial Cable	MAX	N/A	MAX211	2025-10-28	2026-10-27
Coaxial cable	MAX	N/A	MAX210	2025-10-28	2026-10-27
Coaxial Cable	MAX	N/A	MAX212	2025-10-28	2026-10-27
Amplifier(100kHz-3GHz)	HP	8347A	MAX204	2025-10-28	2026-10-27
Amplifier(2GHz-20GHz)	HP	84722A	MAX206	2025-10-28	2026-10-27
Amplifier (18-26GHz)	Rohde & Schwarz	AFS33-18002 650-30-8P-44	MAX218	2025-10-28	2026-10-27
Band filter	Amindeon	82346	MAX219	2025-10-28	2026-10-27
Power Meter	Anritsu	ML2495A	MAX540	2025-10-28	2026-10-27
Power Sensor	Anritsu	MA2411B	MAX541	2025-10-28	2026-10-27
Wideband Radio Communication Tester	Rohde & Schwarz	CMW500	MAX575	2025-10-28	2026-10-27

Splitter	Agilent	11636B	MAX237	2025-10-28	2026-10-27
Loop Antenna	ZHINAN	ZN30900A	MAX534	2025-10-28	2026-10-27
Breitband hornantenne	SCHWARZBECK	BBHA 9170	MAX579	2025-10-28	2026-10-27
Amplifier	TDK	PA-02-02	MAX574	2025-10-28	2026-10-27
Amplifier	TDK	PA-02-03	MAX576	2025-10-28	2026-10-27
PSA Series Spectrum Analyzer	Rohde & Schwarz	FSP	MAX578	2025-10-28	2026-10-27

RF Conducted Test:					
Test Equipment	**Manufacturer**	**Model**	**Serial No.**	**Date of Cal.**	**Due Date**
MXA Signal Analyzer	Agilent	N9020A	MAX566	2025-10-28	2026-10-27
EMI Test Receiver	R&S	ESCI 7	MAX552	2025-10-28	2026-10-27
Spectrum Analyzer	Agilent	E4440A	MAX533	2025-10-28	2026-10-27
MXG vector Signal Generator	Agilent	N5182A	MAX567	2025-10-28	2026-10-27
ESG Analog Signal Generator	Agilent	E4428C	MAX568	2025-10-28	2026-10-27
USB RF Power Sensor	DARE	RPR3006W	MAX569	2025-10-28	2026-10-27
RF Switch Box	Shongyi	RFSW3003328	MAX571	2025-10-28	2026-10-27
Programmable Constant Temp & Humi Test Chamber	WEWON	WHTH-150L-40-880	MAX572	2025-10-28	2026-10-27

4 TEST CONDITIONS AND RESULTS

4.1 AC Power Conducted Emission

TEST CONFIGURATION

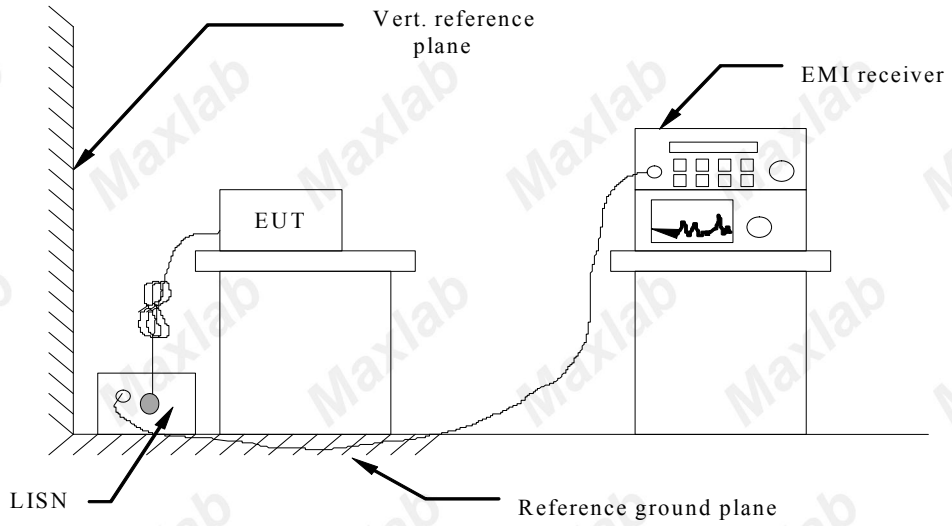

TEST PROCEDURE

1 The equipment was set up as per the test configuration to simulate typical actual usage per the user's manual. The EUT is a tabletop system, a wooden table with a height of 0.8 meters is used and is placed on the ground plane as per ANSI C63.10-2020.
2 Support equipment, if needed, was placed as per ANSI C63.10-2020
3 All I/O cables were positioned to simulate typical actual usage as per ANSI C63.10-2020
4 The EUT received power from adapter, the adapter received AC120V/60Hz and AC 240V/60Hz power through a Line Impedance Stabilization Network (LISN) which supplied power source and was grounded to the ground plane.
5 All support equipments received AC power from a second LISN, if any.
6 The EUT test program was started. Emissions were measured on each current carrying line of the EUT using a spectrum Analyzer / Receiver connected to the LISN powering the EUT.The LISN has two monitoring points: Line 1 (Hot Side) and Line 2 (Neutral Side). Two scans were taken: one with Line 1 connected to Analyzer / Receiver and Line 2 connected to a 50 ohm load; the second scan had Line 1 connected to a 50 ohm load and Line 2 connected to the Analyzer / Receiver.
7 Analyzer / Receiver scanned from 150 KHz to 30MHz for emissions in each of the test modes.
8 During the above scans, the emissions were maximized by cable manipulation.

AC Power Conducted Emission Limit

For intentional device, according to § 15.207(a) AC Power Conducted Emission Limits is as following：

Frequency range (MHz)	Limit (dBuV)	
	Quasi-peak	Average
0.15-0.5	66 to 56*	56 to 46*
0.5-5	56	46
5-30	60	50
* Decreases with the logarithm of the frequency.		

TEST RESULTS

The EUT is powered by the Battery,So this test item is not applicable for the EUT.

4.2 Radiated Emissions and Band Edge

TEST CONFIGURATION

Frequency range 9 KHz – 30MHz

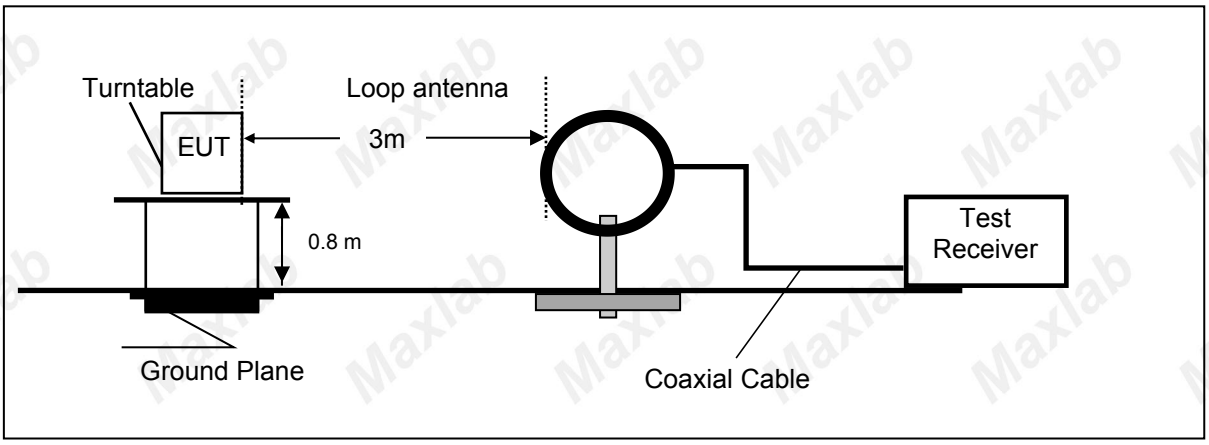

Frequency range 30MHz – 1000MHz

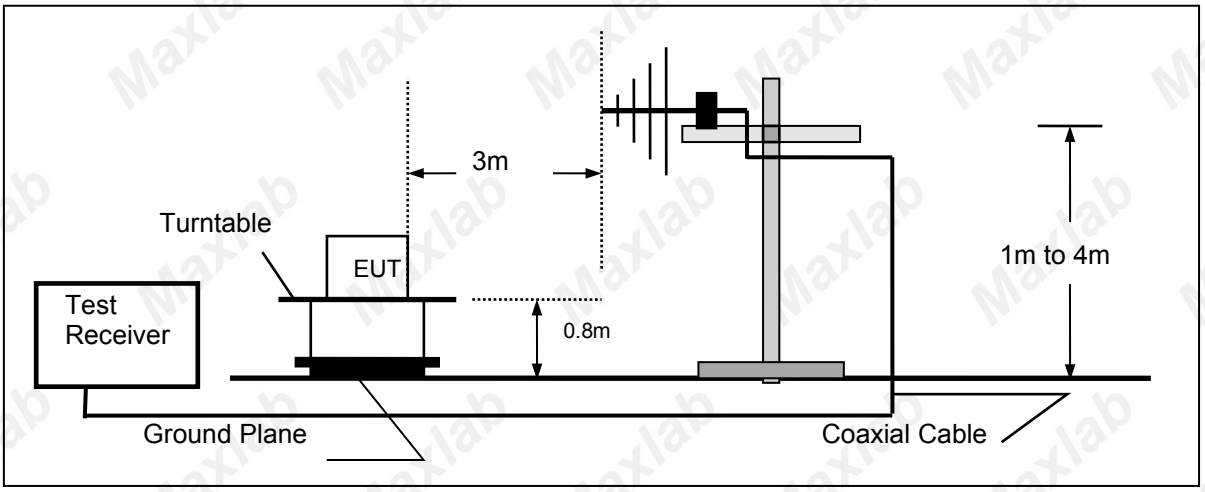

Frequency range above 1GHz-25GHz

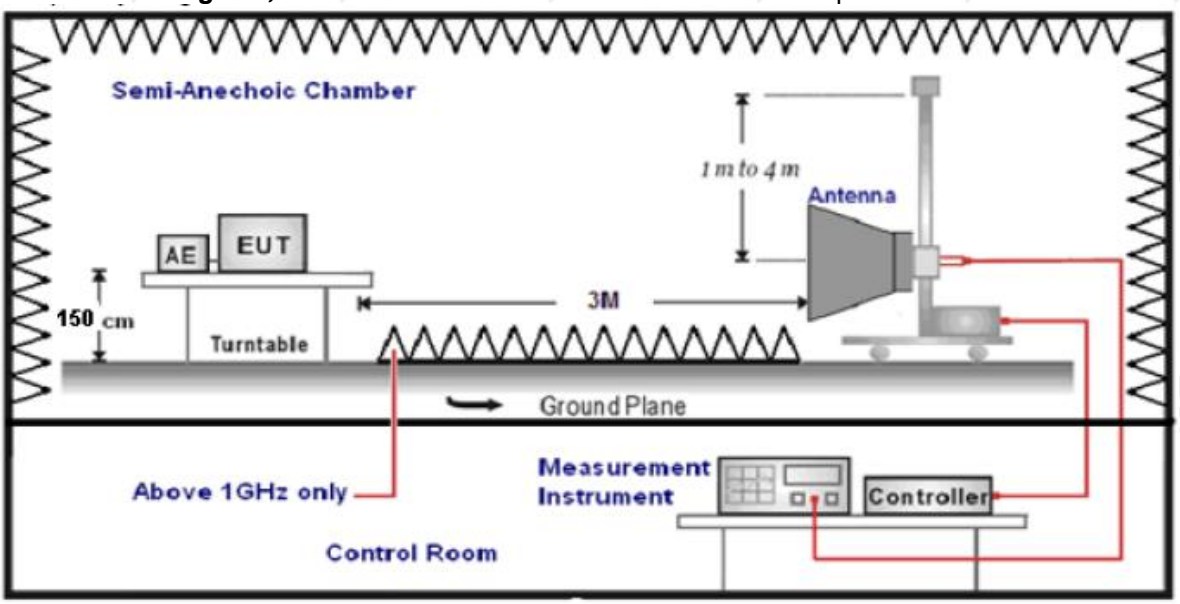

TEST PROCEDURE

1. The EUT was placed on a turn table which is 0.8m above ground plane when testing frequency range 9 KHz –1GHz;the EUT was placed on a turn table which is 1.5m above ground plane when testing frequency range 1GHz – 25GHz.
2. Maximum procedure was performed by raising the receiving antenna from 1m to 4m and rotating the turn table from 0℃ to 360℃ to acquire the highest emissions from EUT.
3. And also, each emission was to be maximized by changing the polarization of receiving antenna both horizontal and vertical.
4. Repeat above procedures until all frequency measurements have been completed.
5. The EUT minimum operation frequency was 32.768KHz and maximum operation frequency was 2480MHz.so radiated emission test frequency band from 9KHz to 25GHz.
6. The distance between test antenna and EUT as following table states:

Test Frequency range	Test Antenna Type	Test Distance
9KHz-30MHz	Active Loop Antenna	3
30MHz-1GHz	Ultra-Broadband Antenna	3
1GHz-18GHz	Double Ridged Horn Antenna	3
18GHz-25GHz	Horn Anternna	1

7. Setting test receiver/spectrum as following table states:

Test Frequency range	Test Receiver/Spectrum Setting	Detector
9KHz-150KHz	RBW=200Hz/VBW=3KHz,Sweep time=Auto	QP
150KHz-30MHz	RBW=9KHz/VBW=100KHz,Sweep time=Auto	QP
30MHz-1GHz	RBW=120KHz/VBW=1000KHz,Sweep time=Auto	QP
1GHz-40GHz	Peak Value: RBW=1MHz/VBW=3MHz, Sweep time=Auto Average Value: RBW=1MHz/VBW=10Hz, Sweep time=Auto	Peak

Field Strength Calculation

The field strength is calculated by adding the Antenna Factor and Cable Factor and subtracting the Amplifier Gain and Duty Cycle Correction Factor(if any) from the measured reading. The basic equation with a sample calculation is as follows:

FS = RA + AF + CL - AG

Where FS = Field Strength	CL = Cable Attenuation Factor (Cable Loss)
RA = Reading Amplitude	AG = Amplifier Gain
AF = Antenna Factor	

Transd=AF +CL-AG

RADIATION LIMIT

For intentional device, according to § 15.209(a), the general requirement of field strength of radiated emission from intentional radiators at a distance of 3 meters shall not exceed the following table. According to § 15.247(d), in any 100kHz bandwidth outside the frequency band in which the EUT is operating, the radio frequency power that is produced by the intentional radiator shall be at least 20dB below that in the100kHz bandwidth within the band that contains the highest level of desired power.

The pre-test have done for the EUT in three axes and found the worst emission at position shown in test setup photos.

Frequency (MHz)	Distance (Meters)	Radiated (dBμV/m)	Radiated (μV/m)
0.009-0.49	3	20log(2400/F(KHz))+40log(300/3)	2400/F(KHz)
0.49-1.705	3	20log(24000/F(KHz))+ 40log(30/3)	24000/F(KHz)
1.705-30	3	20log(30)+ 40log(30/3)	30
30-88	3	40.0	100
88-216	3	43.5	150
216-960	3	46.0	200
Above 960	3	54.0	500

TEST RESULTS

Remark:

1. This test was performed with EUT in X, Y, Z position and the worse case was found when EUT in X position.
2. 2.4G were tested at Low, Middle, and High channel and recorded worst mode at 2.4G 1Mpbs.
3. Radiated emission test from 9 KHz to 10th harmonic of fundamental was verified, and no emission found except system noise floor in 9 KHz to 30MHz and not recorded in this report.

For 30MHz-1GHz

Horizontal

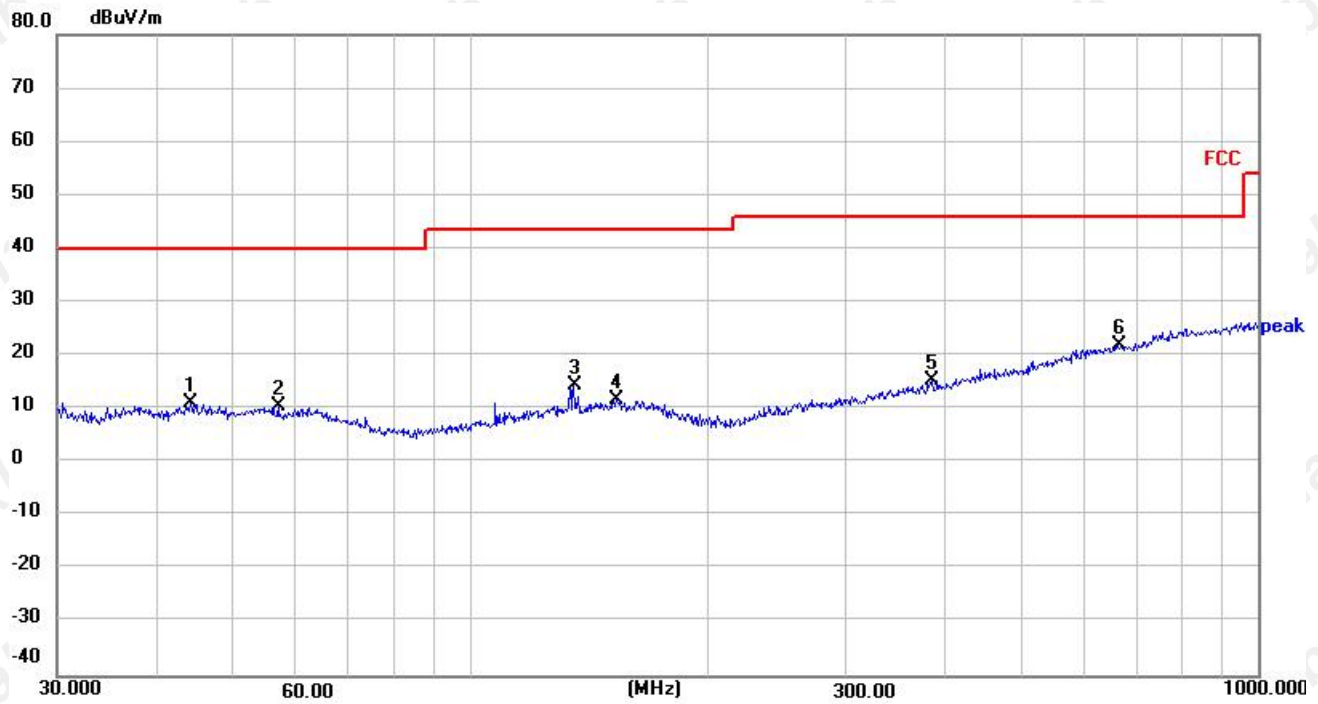

No.	Frequency (MHz)	Reading (dBuV)	Factor (dB/m)	Level (dBuV/m)	Limit (dBuV/m)	Margin (dB)	Detector	Height (cm)	Azimuth (deg.)	P/F
1	44.2752	27.79	-16.49	11.30	40.00	-28.70	peak	100	0	P
2	57.1914	27.59	-16.93	10.66	40.00	-29.34	peak	100	0	P
3	135.5062	31.41	-16.96	14.45	43.50	-29.05	peak	100	0	P
4	153.7385	27.78	-15.93	11.85	43.50	-31.65	peak	100	0	P
5	385.2805	28.81	-13.47	15.34	46.00	-30.66	peak	100	0	P
6 *	663.4729	28.87	-6.91	21.96	46.00	-24.04	peak	100	0	P

Note:1).Level (dBμV/m)= Reading (dBμV)+ Factor (dB/m)
2). Factor(dB/m)=Antenna Factor (dB/m) + Cable loss (dB) - Pre Amplifier gain (dB)
3). Margin(dB) = Limit (dBμV/m) - Level (dBμV/m)

Vertical

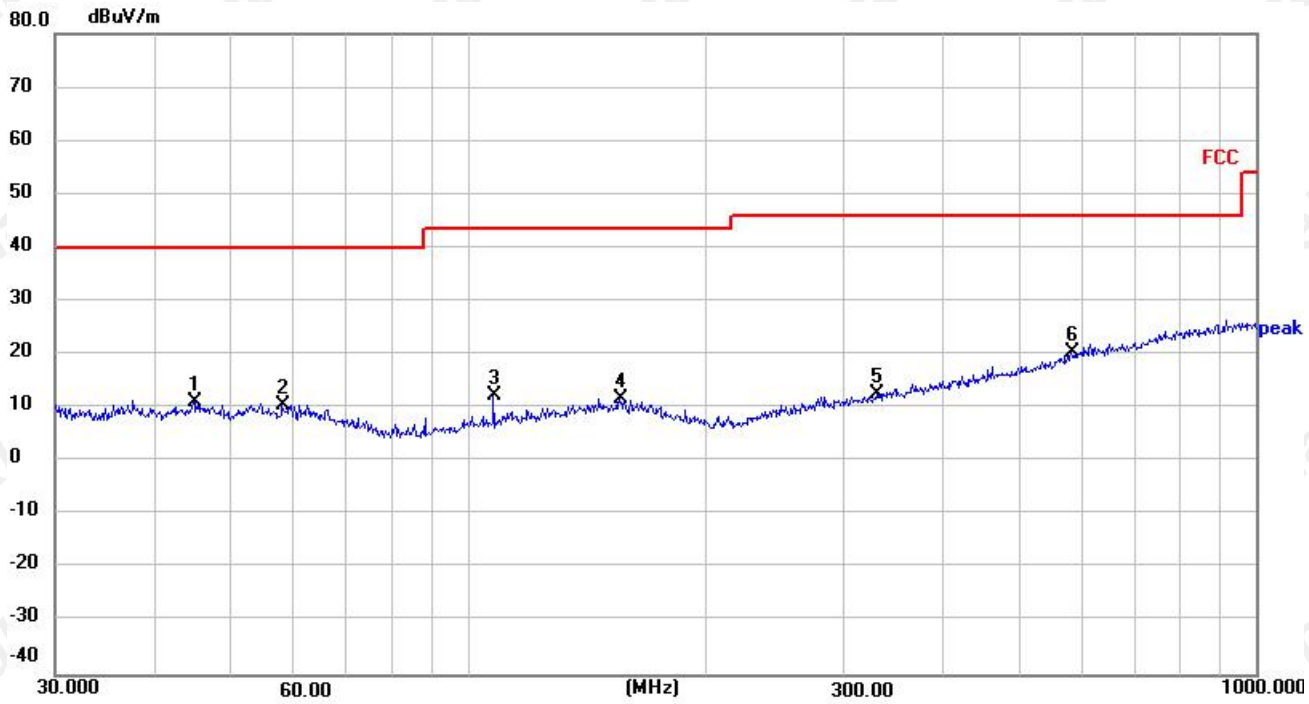

No.	Frequency (MHz)	Reading (dBuV)	Factor (dB/m)	Level (dBuV/m)	Limit (dBuV/m)	Margin (dB)	Detector
1	45.0583	27.74	-16.52	11.22	40.00	-28.78	peak
2	58.2029	27.63	-16.96	10.67	40.00	-29.33	peak
3	107.8877	31.38	-19.15	12.23	43.50	-31.27	peak
4	155.9101	27.77	-15.93	11.84	43.50	-31.66	peak
5	330.1948	27.42	-14.84	12.58	46.00	-33.42	peak
6 *	582.7424	28.67	-8.35	20.32	46.00	-25.68	peak

Note:1).Level (dBμV/m)= Reading (dBμV)+ Factor (dB/m)

2). Factor(dB/m)=Antenna Factor (dB/m) + Cable loss (dB) - Pre Amplifier gain (dB)

3). Margin(dB) = Limit (dBμV/m) - Level (dBμV/m)

For 1GHz to 25GHz

GFSK (above 1GHz)

Frequency(MHz):			**2421**			**Peak value**		
Frequency (MHz)	Read Level (dBuV)	Antenna Factor (dB/m)	Cable Loss (dB)	Preamp Factor (dB)	Level (dBuV/m)	Limit Line (dBuV/m)	Over Limit (dB)	polarization
4842	57.65	23.42	3.9	33.31	51.66	74	-22.34	Vertical
7263	56.35	25.55	5.13	33.65	53.38	74	-20.62	Vertical
9684	53.75	27.48	7.67	34.51	54.39	74	-19.61	Vertical
12105	50.67	29.58	9.83	34.59	55.49	74	-18.51	Vertical
*	*	*	*	*	*	74	*	Vertical
4842	56.57	23.42	3.9	33.31	50.58	74	-23.42	Horizontal
7263	53.75	25.55	5.13	33.65	50.78	74	-23.22	Horizontal
9684	52.47	27.48	7.67	34.51	53.11	74	-20.89	Horizontal
12105	43.67	29.58	9.83	34.59	48.49	74	-25.51	Horizontal
*	*	*	*	*	*	74	*	Horizontal

Average value:

Frequency (MHz)	Read Level (dBuV)	Antenna Factor (dB/m)	Cable Loss (dB)	Preamp Factor (dB)	Level (dBuV/m)	Limit Line (dBuV/m)	Over Limit (dB)	polarization
4842	47.41	23.42	3.9	33.31	41.42	54	-12.58	Vertical
7263	45.97	25.55	5.13	33.65	43	54	-11	Vertical
9684	43.06	27.48	7.67	34.51	43.7	54	-10.3	Vertical
12105	39.89	29.58	9.83	34.59	44.71	54	-9.29	Vertical
*	*	*	*	*	*	54	*	Vertical
4842	46	21.52	3.9	33.31	38.11	54	-15.89	Horizontal
7263	42.78	23.65	5.13	33.65	37.91	54	-16.09	Horizontal
9684	41.69	25.58	7.67	34.51	40.43	54	-13.57	Horizontal
12105	32.92	27.68	9.83	34.59	35.84	54	-18.16	Horizontal
*	*	*	*	*	*	54	*	Horizontal

Frequency(MHz):			**2445**			**Peak value**		
Frequency (MHz)	Read Level (dBuV)	Antenna Factor (dB/m)	Cable Loss (dB)	Preamp Factor (dB)	Level (dBuV/m)	Limit Line (dBuV/m)	Over Limit (dB)	polarization
4890	56.57	22.28	3.73	33.32	49.26	74	-24.74	Vertical
7335	57.57	24.65	4.72	33.92	53.02	74	-20.98	Vertical
9780	53.47	26.54	6.82	33.24	53.59	74	-20.41	Vertical
12225	50.67	28.28	7.93	33.73	53.15	74	-20.85	Vertical
*	*	*	*	*	*	74	*	Vertical
4890	50.75	22.28	3.73	33.32	43.44	74	-30.56	Horizontal
7335	53.67	24.65	4.72	33.92	49.12	74	-24.88	Horizontal
9780	48.75	26.54	6.82	33.24	48.87	74	-25.13	Horizontal
12225	46.35	28.28	7.93	33.73	48.83	74	-25.17	Horizontal
*	*	*	*	*	*	74	*	Horizontal

Average value:

Frequency (MHz)	Read Level (dBuV)	Antenna Factor (dB/m)	Cable Loss (dB)	Preamp Factor (dB)	Level (dBuV/m)	Limit Line (dBuV/m)	Over Limit (dB)	polarization
4890	46.08	22.28	3.73	33.32	38.77	54	-15.23	Vertical
7335	47.38	24.65	4.72	33.92	42.83	54	-11.17	Vertical
9780	42.5	26.54	6.82	33.24	42.62	54	-11.38	Vertical
12225	40.1	28.28	7.93	33.73	42.58	54	-11.42	Vertical
*	*	*	*	*	*	54	*	Vertical
4890	40.11	22.28	3.73	33.32	32.8	54	-21.2	Horizontal
7335	43.1	24.65	4.72	33.92	38.55	54	-15.45	Horizontal
9780	37.78	26.54	6.82	33.24	37.9	54	-16.1	Horizontal
12225	35.63	28.28	7.93	33.73	38.11	54	-15.89	Horizontal
*	*	*	*	*	*	54	*	Horizontal

Frequency(MHz):			2463			Peak value		
Frequency (MHz)	Read Level (dBuV)	Antenna Factor (dB/m)	Cable Loss (dB)	Preamp Factor (dB)	Level (dBuV/m)	Limit Line (dBuV/m)	Over Limit (dB)	polarization
4926	56.57	20.08	2.22	32.33	46.54	74	-27.46	Vertical
7389	55.27	22.45	3.21	32.6	48.33	74	-25.67	Vertical
9852	52.67	24.34	4.54	32.6	48.95	74	-25.05	Vertical
12315	50.46	26.28	4.97	32.52	49.19	74	-24.81	Vertical
*	*	*	*	*	*	74	*	Vertical
4926	57.58	20.08	2.22	32.33	47.55	74	-26.45	Horizontal
7389	52.36	22.45	3.21	32.6	45.42	74	-28.58	Horizontal
9852	50.47	24.34	4.54	32.6	46.75	74	-27.25	Horizontal
12315	48.67	26.28	4.97	32.52	47.4	74	-26.6	Horizontal
*	*	*	*	*	*	74	*	Horizontal

Average value:

Frequency (MHz)	Read Level (dBuV)	Antenna Factor (dB/m)	Cable Loss (dB)	Preamp Factor (dB)	Level (dBuV/m)	Limit Line (dBuV/m)	Over Limit (dB)	polarization
4926	46.09	20.08	2.22	32.33	36.06	54	-17.94	Vertical
7389	44.59	22.45	3.21	32.6	37.65	54	-16.35	Vertical
9852	42.03	24.34	4.54	32.6	38.31	54	-15.69	Vertical
12315	39.97	26.28	4.97	32.52	38.7	54	-15.3	Vertical
*	*	*	*	*	*	54	*	Vertical
4926	46.8	20.08	2.22	32.33	36.77	54	-17.23	Horizontal
7389	41.69	22.45	3.21	32.6	34.75	54	-19.25	Horizontal
9852	39.6	24.34	4.54	32.6	35.88	54	-18.12	Horizontal
12315	37.98	26.28	4.97	32.52	36.71	54	-17.29	Horizontal
*	*	*	*	*	*	54	*	Horizontal

Remark:

1. *Final Level =Receiver Read level + Antenna Factor + Cable Loss – Preamplifier Factor*
2. *The emission levels of other frequencies are very lower than the limit and not show in test report.*

4.3 BANDWIDTH OF FREQUENCY BAND EDGE

4.3.1 Test Requirement:

<table>
<tr><td>Test Requirement:</td><td colspan="5">FCC Part15 C Section 15.209 and 15.205</td></tr>
<tr><td>Test Method:</td><td colspan="5">ANSI C63.10: 2020</td></tr>
<tr><td>Test Frequency Range:</td><td colspan="5">All of the restrict bands were tested, only the worst band's (2310MHz to 2500MHz) data was showed.</td></tr>
<tr><td>Test site:</td><td colspan="5">Measurement Distance: 3m</td></tr>
<tr><td rowspan="3">Receiver setup:</td><td>Frequency</td><td>Detector</td><td>RBW</td><td>VBW</td><td>Value</td></tr>
<tr><td rowspan="2">Above 1GHz</td><td>Peak</td><td>1MHz</td><td>3MHz</td><td>Peak</td></tr>
<tr><td>Average</td><td>1MHz</td><td>3MHz</td><td>Average</td></tr>
</table>

Emissions radiated outside of the specified frequency bands, except for harmonics, shall be attenuated by at least 50 dB below the level of the fundamental or to the general radiated emission limits in § 15.209, whichever is the lesser attenuation

4.3.2 TEST PROCEDURE

Above 1GHz test procedure as below:

a. 1. The EUT was placed on the top of a rotating table 1.5 meters above the ground at a 3 meter camber. The table was rotated 360 degrees to determine the position of the highest radiation.
b. The EUT was set 3 meters away from the interference-receiving antenna, which was mounted on the top of a variable-height antenna tower.
c. The antenna height is varied from one meter to four meters above the ground to determine the maximum value of the field strength. Both horizontal and vertical polarizations of the antenna are set to make the measurement.
d. For each suspected emission, the EUT was arranged to its worst case and then the antenna was tuned to heights from 1 meter to 4 meters and the rota table was turned from 0 degrees to 360 degrees to find the maximum reading.
e. The test-receiver system was set to Peak Detect Function and Specified Bandwidth with Maximum Hold Mode.
f. If the emission level of the EUT in peak mode was 10dB lower than the limit specified, then testing could be stopped and the peak values of the EUT would be reported. Otherwise the emissions that did not have 10dB margin would be re-tested one by one using peak, quasi-peak or average method as specified and then reported in a data sheet.
g. Test the EUT in the lowest channel, the Highest channel

Note:

Both horizontal and vertical antenna polarities were tested
and performed pretest to three orthogonal axis. The worst case emissions were reported

4.3.3 DEVIATION FROM TEST STANDARD

No deviation

4.3.4 TEST SETUP

Radiated Emission Test-Up Frequency Above 1GHz

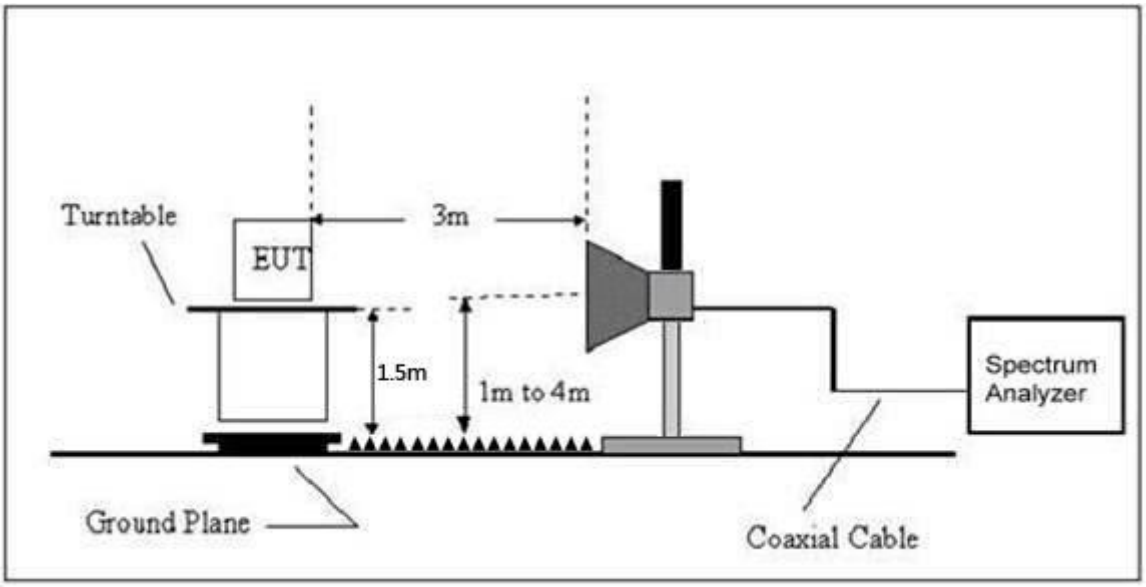

4.3.5 EUT OPERATING CONDITIONS

The EUT tested system was configured as the statements of 2.3 Unless otherwise a special operating condition is specified in the follows during the testing.

4.3.6 TEST RESULT

2421MHz
Peak value:

Frequency (MHz)	Read Level (dBuV)	Antenna Factor (dB/m)	Cable Loss (dB)	Preamp Factor (dB)	Level (dBuV/m)	Limit Line (dBuV/m)	Over Limit (dB)	Polarization
2310	55.78	21.25	3.26	33.14	47.15	74	-26.85	Horizontal
2390	56.95	21.54	3.42	33.26	48.65	74	-25.35	Horizontal
2400	58.37	21.75	3.54	33.42	50.24	74	-23.76	Horizontal
2310	56.37	21.54	3.42	33.26	48.07	74	-25.93	Vertical
2390	58.75	21.25	3.26	33.14	50.12	74	-23.88	Vertical
2400	56.32	21.75	3.54	33.42	48.19	74	-25.81	Vertical

Average value:

Frequency (MHz)	Read Level (dBuV)	Antenna Factor (dB/m)	Cable Loss (dB)	Preamp Factor (dB)	Level (dBuV/m)	Limit Line (dBuV/m)	Over Limit (dB)	Polarization
2310	45.42	21.25	3.26	33.14	36.79	54	-17.21	Horizontal
2390	46.28	21.54	3.42	33.26	37.98	54	-16.02	Horizontal
2400	47.69	21.75	3.54	33.42	39.56	54	-14.44	Horizontal
2310	45.73	21.25	3.26	33.14	37.1	54	-16.9	Vertical
2390	48.41	21.54	3.42	33.26	40.11	54	-13.89	Vertical
2400	45.64	21.75	3.54	33.42	37.51	54	-16.49	Vertical

2463MHz
Peak value:

Frequency (MHz)	Read Level (dBuV)	Antenna Factor (dB/m)	Cable Loss (dB)	Preamp Factor (dB)	Level (dBuV/m)	Limit Line (dBuV/m)	Over Limit (dB)	Polarization
2483.5	56.78	22.12	3.65	33.54	49.01	74	-24.99	Horizontal
2500	59.68	22.35	3.98	33.27	52.74	74	-21.26	Horizontal
2483.5	55.75	22.12	3.65	33.54	47.98	74	-26.02	Vertical
2500	53.67	22.35	3.98	33.27	46.73	74	-27.27	Vertical

Average value:

Frequency (MHz)	Read Level (dBuV)	Antenna Factor (dB/m)	Cable Loss (dB)	Preamp Factor (dB)	Level (dBuV/m)	Limit Line (dBuV/m)	Over Limit (dB)	Polarization
2483.5	46.13	22.12	3.65	33.54	38.36	54	-15.64	Horizontal
2500	48.81	22.35	3.98	33.27	41.87	54	-12.13	Horizontal
2483.5	45.07	22.12	3.65	33.54	37.3	54	-16.7	Vertical
2500	42.89	22.35	3.98	33.27	35.95	54	-18.05	Vertical

Remark: Final Level =Receiver Read level + Antenna Factor + Cable Loss – Preamplifier Factor
All of the restriction bands were tested, and only the data of worst case was exhibited.

Measurement data:

Field Strength of The Fundamental Signal

Peak value:

Frequency (MHz)	Read Level (dBuV)	Antenna Factor (dB/m)	Cable Loss (dB)	Preamp Factor (dB)	Level (dBuV/m)	Limit Line (dBuV/m)	Over Limit (dB)	polarization
2421	100.27	22.55	3.25	33.45	92.62	114	-21.38	Vertical
2421	98.57	22.55	3.25	33.45	90.92	114	-23.08	Horizontal
2445	102.37	23.05	3.36	33.15	95.63	114	-18.37	Vertical
2445	100.68	23.05	3.36	33.15	93.94	114	-20.06	Horizontal
2463	96.35	23.57	3.67	33.68	89.91	114	-24.09	Vertical
2463	100.27	23.57	3.67	33.68	93.83	114	-20.17	Horizontal

Average value:

Frequency (MHz)	Read Level (dBuV)	Antenna Factor (dB/m)	Cable Loss (dB)	Preamp Factor (dB)	Level (dBuV/m)	Limit Line (dBuV/m)	Over Limit (dB)	polarization
2421	89.59	22.55	3.25	33.45	81.94	94	-12.06	Vertical
2421	87.6	22.55	3.25	33.45	79.95	94	-14.05	Horizontal
2445	91.69	23.05	3.36	33.15	84.95	94	-9.05	Vertical
2445	89.81	23.05	3.36	33.15	83.07	94	-10.93	Horizontal
2463	85.6	23.57	3.67	33.68	79.16	94	-14.84	Vertical
2463	89.32	23.57	3.67	33.68	82.88	94	-11.12	Horizontal

Remark:

1. *Final Level =Receiver Read level + Antenna Factor + Cable Loss – Preamplifier Factor*

4.4 Channel Bandwidth

Test Requirement:	FCC Part15 C Section 15.215
Test Method:	ANSI C63.10: 2020

4.4.1 Applied procedures / limit

FCC Part15 (15.215) , Subpart C			
Section	Test Item	Frequency Range (MHz)	Result
15.215	Bandwidth	2400-2483.5	PASS

4.4.2 TEST PROCEDURE

1. Set resolution bandwidth (RBW) = 1-5% or DTS BW, not to exceed 100 kHz.
2. Set the video bandwidth (VBW) ⩾ 3 x RBW.
3. Detector = Peak.
4. Trace mode = max hold.
5. Sweep = auto couple.
6. Allow the trace to stabilize.
7. Measure the maximum width of the emission that is constrained by the frequencies associated with the two outermost amplitude points (upper and lower) that are attenuated by 20 dB relative to the maximum level measured in the fundamental emission.

4.4.3 DEVIATION FROM STANDARD

No deviation.

4.4.4 TEST SETUP

4.4.5 EUT OPERATION CONDITIONS

The EUT tested system was configured as the statements of 2.4 Unless otherwise a special operating condition is specified in the follows during the testing.

4.4.6 TEST RESULTS

Temperature:	26℃	Relative Humidity:	54%
Test Mode :	GFSK	Test Voltage :	DC 3.0V

Test channel	Channel Bandwidth (MHz)	Result
2421MHz	1.373	Pass
2445MHz	1.289	
2463MHz	2.840	

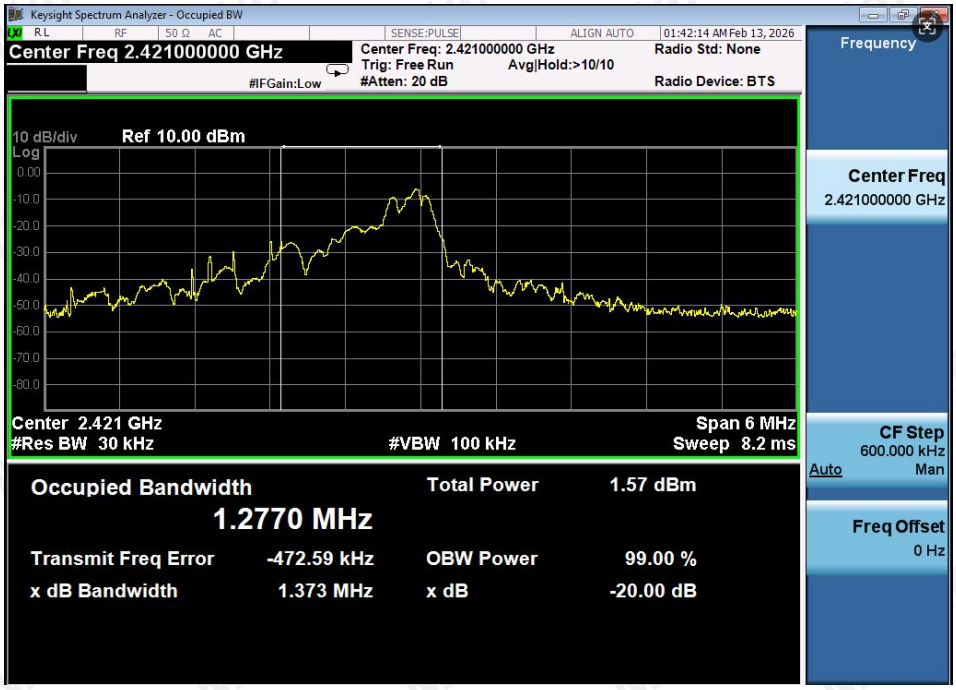

Lowest channel

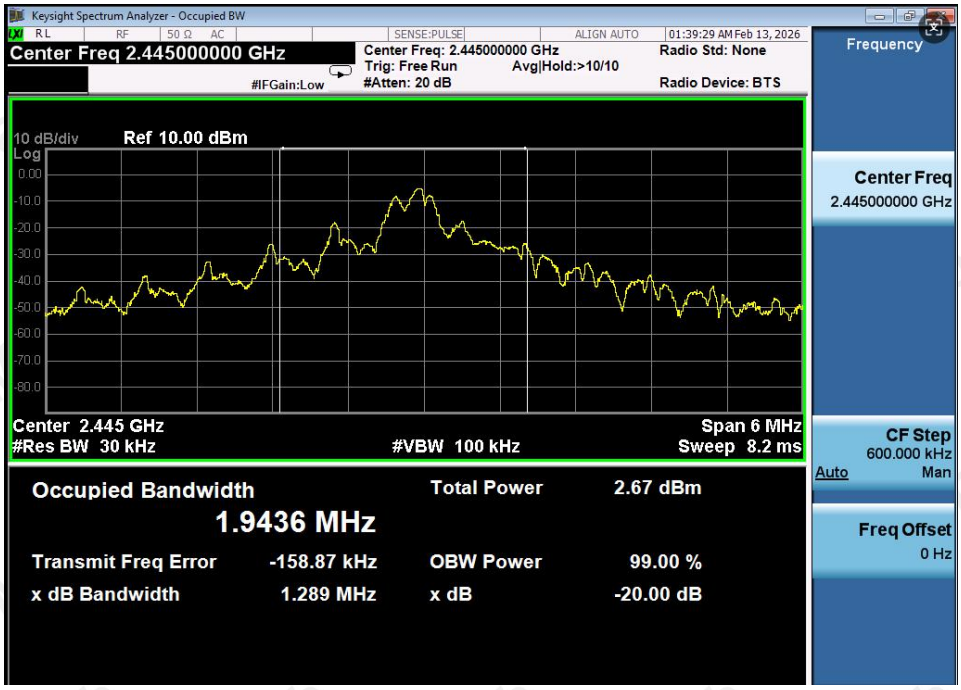

Middle channel

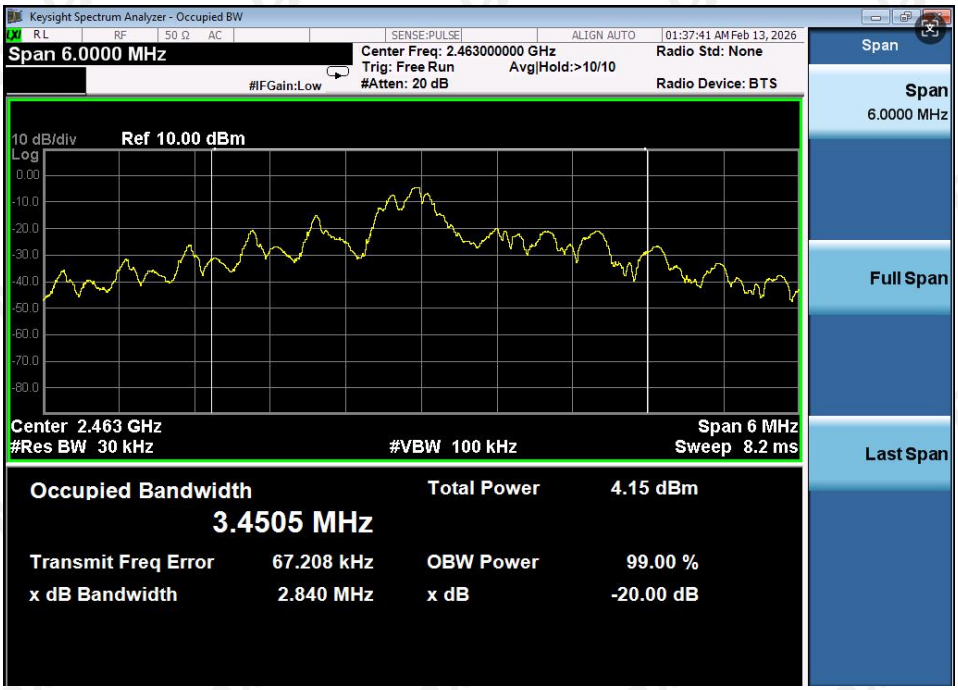

Highest channel

4.5 Antenna Requirement

Standard Applicable

For intentional device, according to FCC 47 CFR Section 15.203:

An intentional radiator shall be designed to ensure that no antenna other than that furnished by the responsible party shall be used with the device. The use of a permanently attached antenna or of an antenna that uses a unique coupling to the intentional radiator, the manufacturer may design the unit so that a broken antenna can be replaced by the user, but the use of a standard antenna jack or electrical connector is prohibited

Antenna Connected Construction

The maximum gain of antenna was 0 dBi.

Remark:The antenna gain is provided by the customer , if the data provided by the customer is not accurate, MAXLAB Testing Co.,Ltd. does not assume any responsibility.

5 Test Setup Photos of the EUT

Reference to the appendix I for details.

6 Photos of the EUT

Reference to the appendix II for details.

********** End of Report **********