Industrial Positioning System - Manual P-108-061/10G/60G

Applications

The system can be used by the user to ascertain the location of the Slave device relative to the Master device and the user can utilize this information for short distance survey and positioning purposes.

The system is designed for industrial and robotics use.

Features

- Frequency range **61.145 GHz to 63.980 GHz**
- Maximum RF output power **+14dBm peak EIRP** according to ETSI EN 305 550 V2.1.0 and FCC 47 CFR §15.255
- Distance range **0.25m to 10m**
- 10Gbps Ethernet interface (IEEE 802.3ae)
- 10Gbps Synchronization interface
- 1D or 2D positioning
- Ultra high dynamic range receiver
- AC power adapter or battery power
- Low power consumption

Description

System includes two antennas and two high speed 10Gbps interfaces. One 10Gbps interface is configured in Ethernet mode IEEE 802.3ae. System can be powered from DC power source (10∼14V DC) or by external power adapter (90∼264V AC 47∼63Hz).

The system range can be extended by connecting several units by a 10Gbps synchronization interface.

Figure 1: Prototype top view

Figure 2: Prototype bottom view

FCC regulatory notices

This device complies with Part 15 of the FCC Rules. Operation is subject to the following two conditions:

(1) This device may not cause harmful interference, and (2) this device must accept any interference received, including interference that may cause undesired operation.

Changes or modifications made to this equipment not expressly approved by Apsara Energy LLC may void the FCC authorization to operate this equipment.

Quickstart

- See the location of connectors and interfaces at images in the chapter *Device description* (page 3).
- Screw the device to a standard aluminum profile or to the custom mechanics. Alternatively, you can use the supplied plastic legs, which are suitable for testing the equipment. The fan must not be covered and nothing must interfere with the fan space. Keep in mind that the antennas minimum body distance is 20cm. More details in section *Installation instructions and connection to the computer* (page 4).
- Insert 10GBps SFP module into the ETH port cage, insert Fibre Optics cable to the SFP module. Detailed description is in chapter *Ethernet connection* (page 6).
- Plug the power supply into the power connector and turn on the power supply to start up the device. See the section *Power* (page 3).
- Default device IP address is *192.168.57.10*, netmask *255.255.255.0*, gateway *192.168.57.1*.
- The computer software and SW requirements are specified in section *SW requirements* (page 7). Prepare the computer as described in the *Software instructions* section (page 7).
- Set the computer's IP address to *192.168.57.1*, netmask *255.255.255.0*. Verify the connection between the computer and device by `ping 192.168.57.10` command. The device has to respond with a response time of less than 10ms.
- Start software and test the positioning as described in chapter *Positioning* (page 8)

System description

The unit can be configured in two modes: Master or Slave.

A unit operating in Master mode determines the position of a unit operating in Slave mode relative to itself. The unit operating in Slave mode is under the control of the unit operating in Master mode, and does not initiate syncronization or measurements on its own.

The unit operating in Master mode starts transmission after receiving an inquiry via the 10G Ethernet interface. The Master mode unit then synchronizes with a unit operating in Slave mode to determine that unit's position. The minimum period of the positioning sequence is 40ms (maximum repetition frequency is 25Hz).

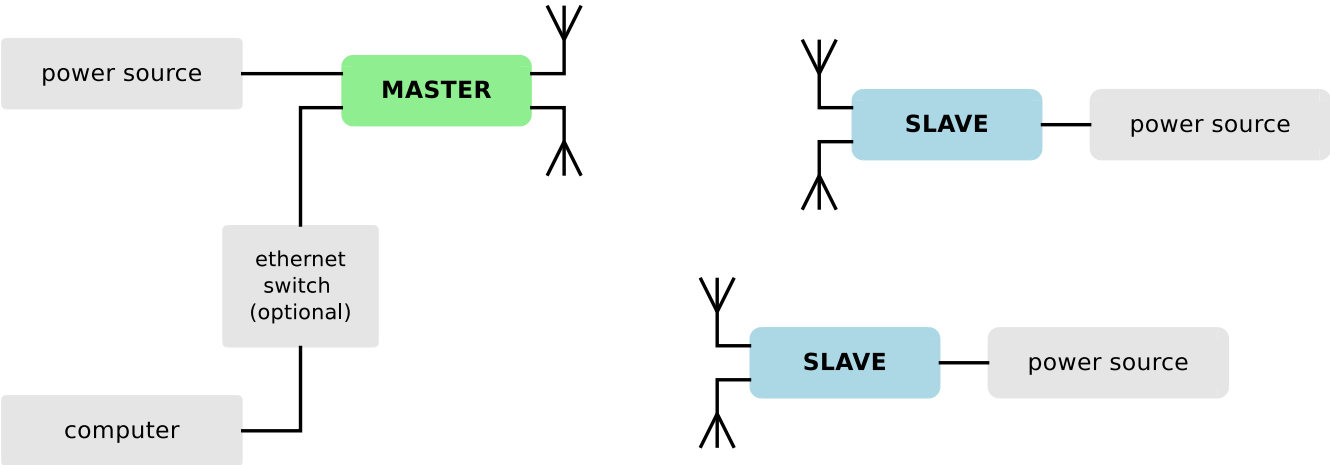

Figure 3: System block diagram

Device description

The device uses two antennas for its function, see Figure 4. The antennas must not be covered and must point to the localization area. The minimum body distance is 20cm.

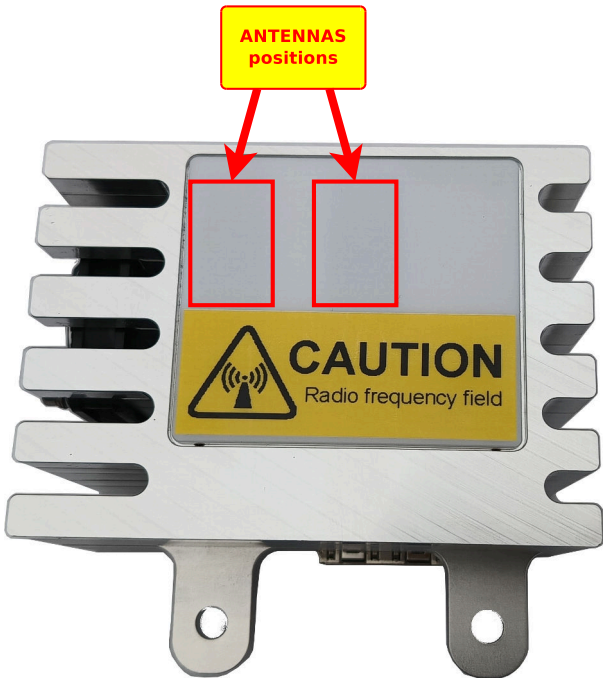

Figure 4: Antenna positions

The P-108-061/10G/60G device has one power connector and two 10Gbps communication ports, see Figure 6 for the connector positions.

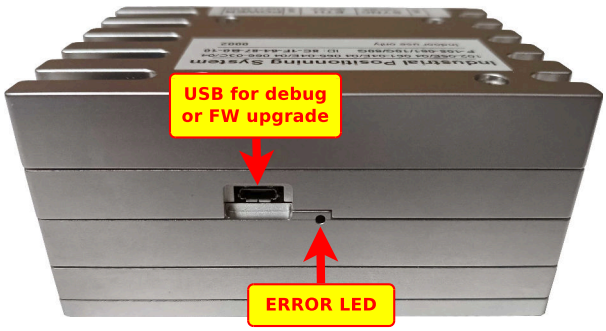

Figure 5: Front panel description

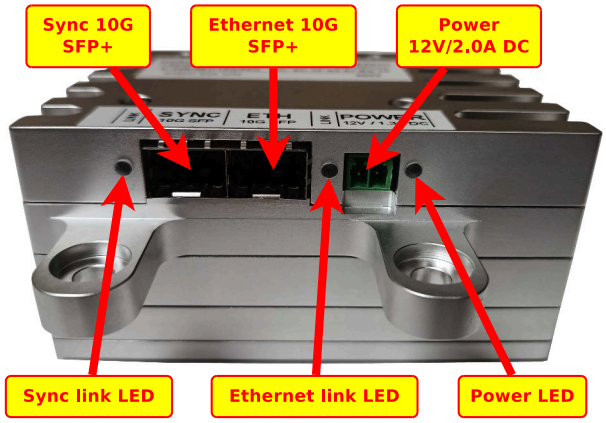

Figure 6: Back panel description

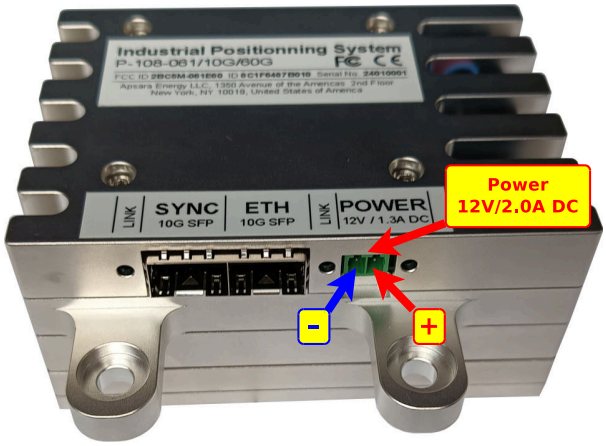

Figure 7: Pover polarity

Installation instructions and connection to the computer

Mounting

The P-108-061/10G/60G device uses standard profiles from the aluminium modular system. Use of standardized profiles simplifies device integration. Parts for mounting to aluminium system profiles are commonly available from many different manufacturers.

An example of the installation is shown in Figure 8. The device is mounted by 2pcs screws M6 to standard

alumimnum profile or to the custom mechanics. Keep in mind following istallation rules:

- The antennas must point to the localization area.
- The recommended height above floor is between 50cm and 125cm.
- The antennas must not be covered.
- The minimum body distance is 20cm.
- The fan must not be covered. Nothing must obstruct the air flow around the fan. The minimum empty space around fan is 50mm.

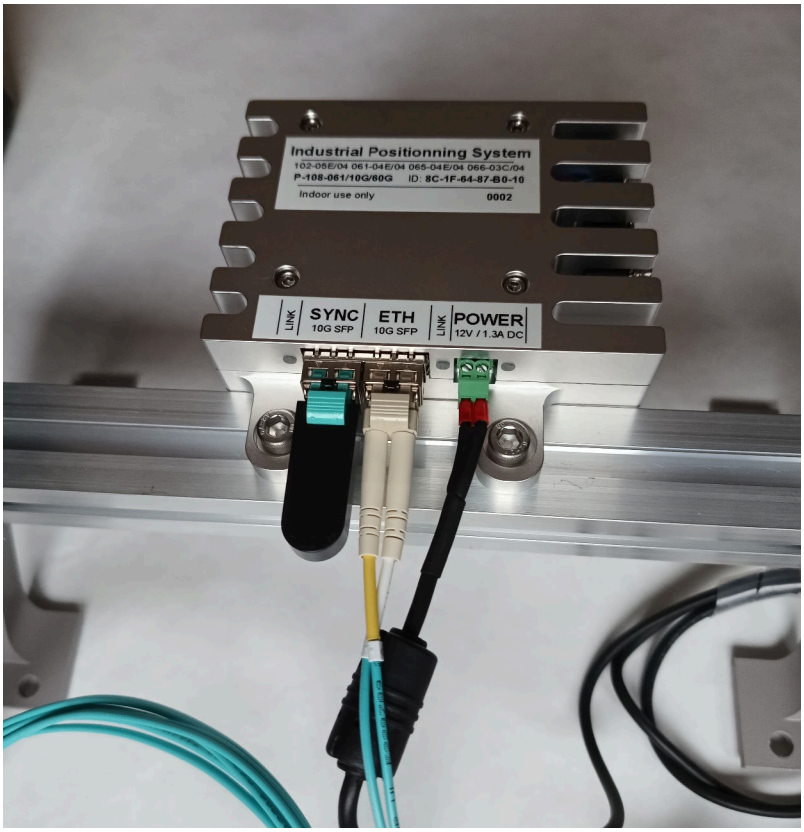

Figure 8: P-108-061/10G/60G device installation example

Power

Operation from DC power source or battery

The device requires a DC power supply with a nominal voltage of 12 V. The average current is about 1.5 Amps (∼17 Wats). **The recommended power suply is 12V / 2A DC**.

The device accepts the input voltage between 10V and 14V DC

To connect the power supply, use the *Wurth* connector product number *691361100002* (WR-TBL Series 3611 - 3.50 mm pitch). **Pin 1 is connected to ground (GND) and pin 2 is positive voltage (+12V DC).** The polarity of the power connector is shown in Figure 7 (page 4)

Operation from AC power adapter

The device can be powered from AC power adapter. The nominal output voltage of the power adapter is 12V DC and the recommended current is 2.0 Amps or more. List of compatible power adapters:

- ***Velleman PSSEMV26*** *(recommended)*
- *MEAN WELL GST40A12-P1J*
- *MEAN WELL GST60A12-P1J*
- *MEAN WELL GE30I12-P1J*

Ethernet connection

The device suports 10G ethernet interface only (10GBASE-SR SFP+ modules). The block diagram in Figure 9 shows a direct connection to a computer using a 10Gbps optical network. The 10G Ethernet adapter must support the MTU size 9600 bytes.

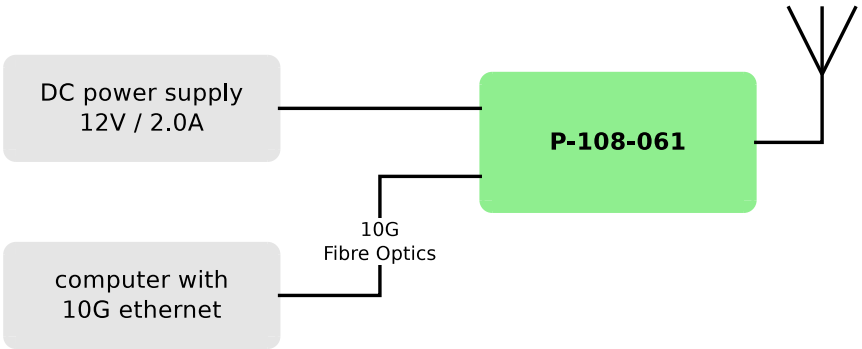

Figure 9: Connection to the computer by 10G Ethernet interface

The 1G or 2.5G or 5G ethernet modes are not supported by FW and SW. The 1G, 2.5G or 5G connection is possible through 10G Ethernet switch only (for example Mikrotik CRS305-1G-4S+IN or similar). The block diagram in Figure 10 shows the connection to a computer using a 1Gbps/2.5Gbps/5Gbps/10Gbps optical or copper network. The 10G Ethernet switch must support the MTU size 9600 bytes.

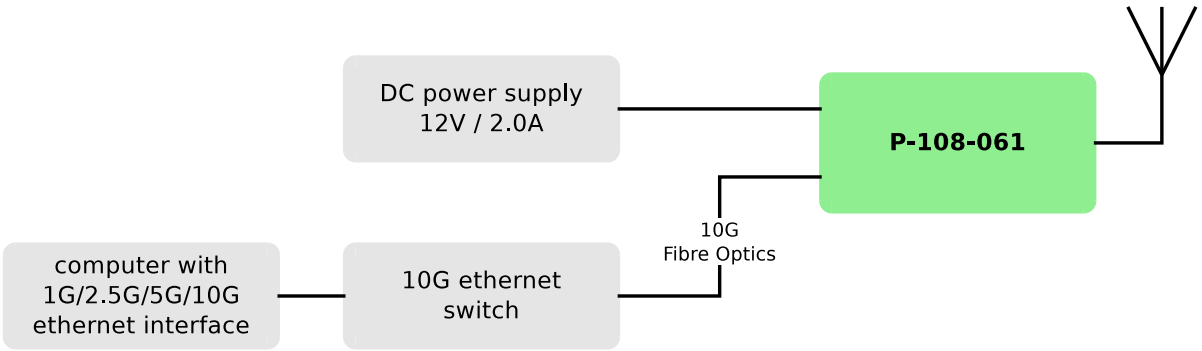

Figure 10: Connection to the computer by 1G/2.5G/5G or 10G Ethernet interface

List of compatible network accessories

List of compatible SFP+ modules (10G, 850nm, LC, MMF):

- *TP-Link TL-SM5110-SR*
- ***Intel E10GSFPSR*** (recommended)
- *FS SFP-10GSR-85*

The 10G Ethernet card must support the MTU size 9600 bytes. List of compatible dual 10G Ethernet cards:

- Any Network Card with ***Intel X520-DA2 (Intel E10G42BTDA)*** chipset (recommended)
- Any Network Card with *Broadcom BCM57810S* chipset

The 10G Ethernet switch must support the MTU size 9600 bytes. List of compatible 10G switches:

- ***Mikrotik CRS305-1G-4S+IN*** (recommended)
- *Mikrotik CRS310-1G-5S-4S+IN*
- *Mikrotik CSS610-8G-2S+IN*
- *Arista DCS-7050S*

Software instructions

SW requirements

The processing SW uses Linux OS only. The recommended Linux distribution is **Ubuntu 22.04.3 LTS**. Following SW packages has to be installed at the computer:

- **NVIDIA CUDA** version 11.4, NVIDIA CUDA Installation Guide for Linux.
- **SW-108-061** software package
- **Python 3** software package

The P-108-061/10G/60G device uses high datarate and Jumbo packets for communication with the computer. The following optimization of the 10G Ethernet interface must be performed on a computer:

- MTU size 9600 bytes (Jumbo packets)
- Setting the maximum RX and TX buffer sizes on the Ethernet card chipset.
- Setting large buffers for Ethernet communication in Linux operating system.

Reconfiguring buffers and MTU is done by a script during Linux OS boot. This script is part of the SW-108-061 installation package.

Hardware setup for SW tests is shown in Figure 13 and in Figure 12.

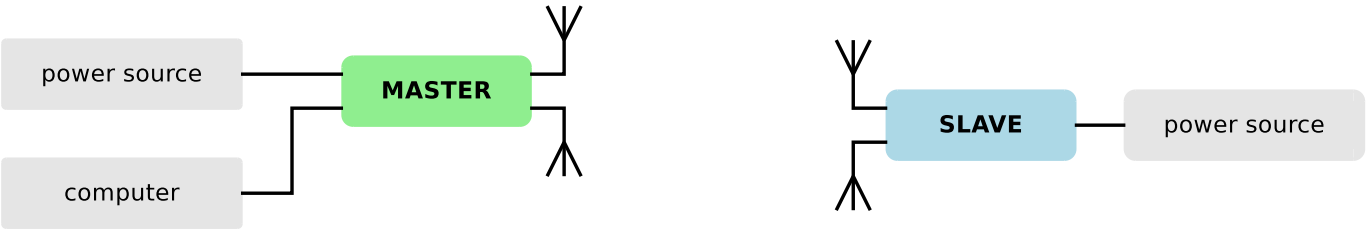

Figure 11: Block diagram for SW tests

Initial network configuration

Default device IP address is *192.168.57.10*, netmask *255.255.255.0*, gateway *192.168.57.1*.

To initially set up the device, set the computer's IP address to *192.168.57.1*, netmask *255.255.255.0*.

Positioning

Open a Linux terminal and change directory to the *SW-108-061* software installation directory.

```
cd /data/SW-108-061/eth_loop
```

The software is launched as follows

```
./build/sw-108-061
```

The software then starts to periodically print out the coordinates.

The program help is printed with the following command

```
./build/sw-108-061 --help
```

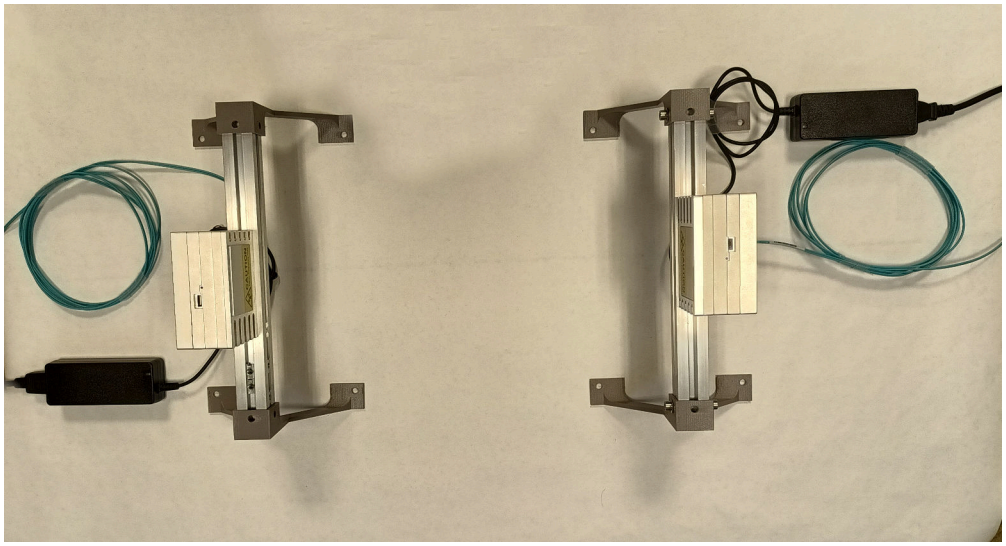

Figure 12: Location of the devices for positioning tests

Changing the IP address, static address

Open a Linux terminal and change directory to the *SW-108-061* software installation directory.

```
cd /data/SW-108-061/
```

Connect to the device by following command

```
./terminal.py --ip-unit [current device IP address]
```

Now we are connected to the device and we can send commands to the device. The device IP address is changed by `ifconfig` command. The command structure is following:

```
ifconfig [new device IP address]/[netmask] [gateway]
```

For example, if we want to change the IP address to *192.168.58.10*, netmask *255.255.255.0*, gateway *192.168.58.1*, then we send the following command to the device:

```
ifconfig 192.168.58.10/24 192.168.58.1
```

Restart the device by following command:

```
reset
```

The Python script exits after the `reset` command is entered.

Change the IP address of the computer.

Verify the connection between computer and device by `ping` commad

```
ping [new device IP address]
```

Changing the IP address, enable DHCP address

Open a Linux terminal and change directory to the *SW-108-061* software installation directory.

```
cd /data/SW-108-061/
```

Connect to the device by following command:

```
./terminal.py --ip-unit [current device IP address]
```

Now we are connected to the device and we can send commands to the device. Change the IP address to an address from the DHCP server:

```
ifconfig dhcp on
```

Restart the device by following command:

```
reset
```

The Python script exits after the `reset` command is entered.

The change takes effect after device reboot.

Change the IP address of the computer.

Verify the connection between computer and device by `ping` commad

```
ping [new device IP address]
```

Changing the IP address, disable DHCP address

Open a Linux terminal and change directory to the *SW-108-061* software installation directory.

```
cd /data/SW-108-061/
```

Connect to the device by following command:

```
./terminal.py --ip-unit [current device IP address]
```

Now we are connected to the device and we can send commands to the device. To disable DHCP mode and switch back to a static IP address, use the following command in the terminal:

```
ifconfig dhcp off
```

Then restart the device by following command:

```
reset
```

The change takes effect after device reboot.

Firmware upgrade

Connect the P-108-061/10G/60G device by the USB interface.

Open a Linux terminal and change directory to the *FW-108-061-v[release version]* directory.

```
cd /data/FW-108-061-v[release version]/
```

Run the following batch to program the device:

```
./fw_upgrade.sh
```

After startup, the batch script backs up the unit's configuration, then programs the device with new firmware, and finally restores the unit's configuration after programming. During the programming process you will be prompted to power cycle the device (power off, wait 5 seconds, power on).

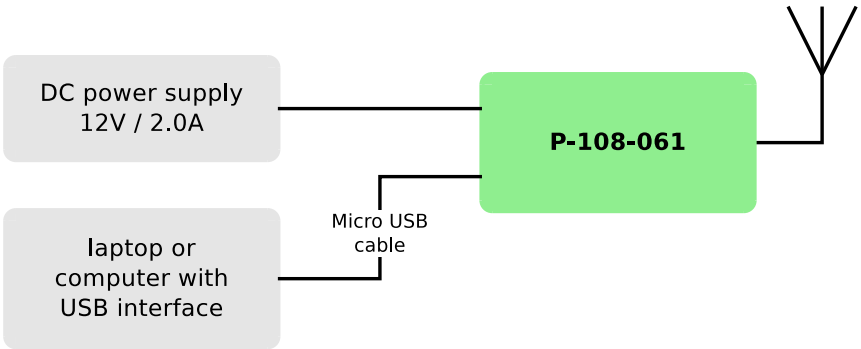

Figure 13: FW upgrade block diagram

Design owner, certificate owner, sales and support

Apsara Energy LLC, 1350 Avenue of the Americans 2nd Floor, 100 19 NY New York, United States of America

Contents

Applications **1**

Features **1**

Description **1**

FCC regulatory notices **2**

Quickstart **2**

System description **2**

Device description **3**

Installation instructions and connection to the computer **4**

Mounting 4

Power 5

Operation from DC power source or battery 5

Operation from AC power adapter 6

Ethernet connection 6

List of compatible network accessories 7

Software instructions **7**

SW requirements 7

Initial network configuration 8

Positioning 8

Changing the IP address, static address 9

Changing the IP address, enable DHCP address 9

Changing the IP address, disable DHCP address 10

Firmware upgrade 10

Design owner, certificate owner, sales and support **10**