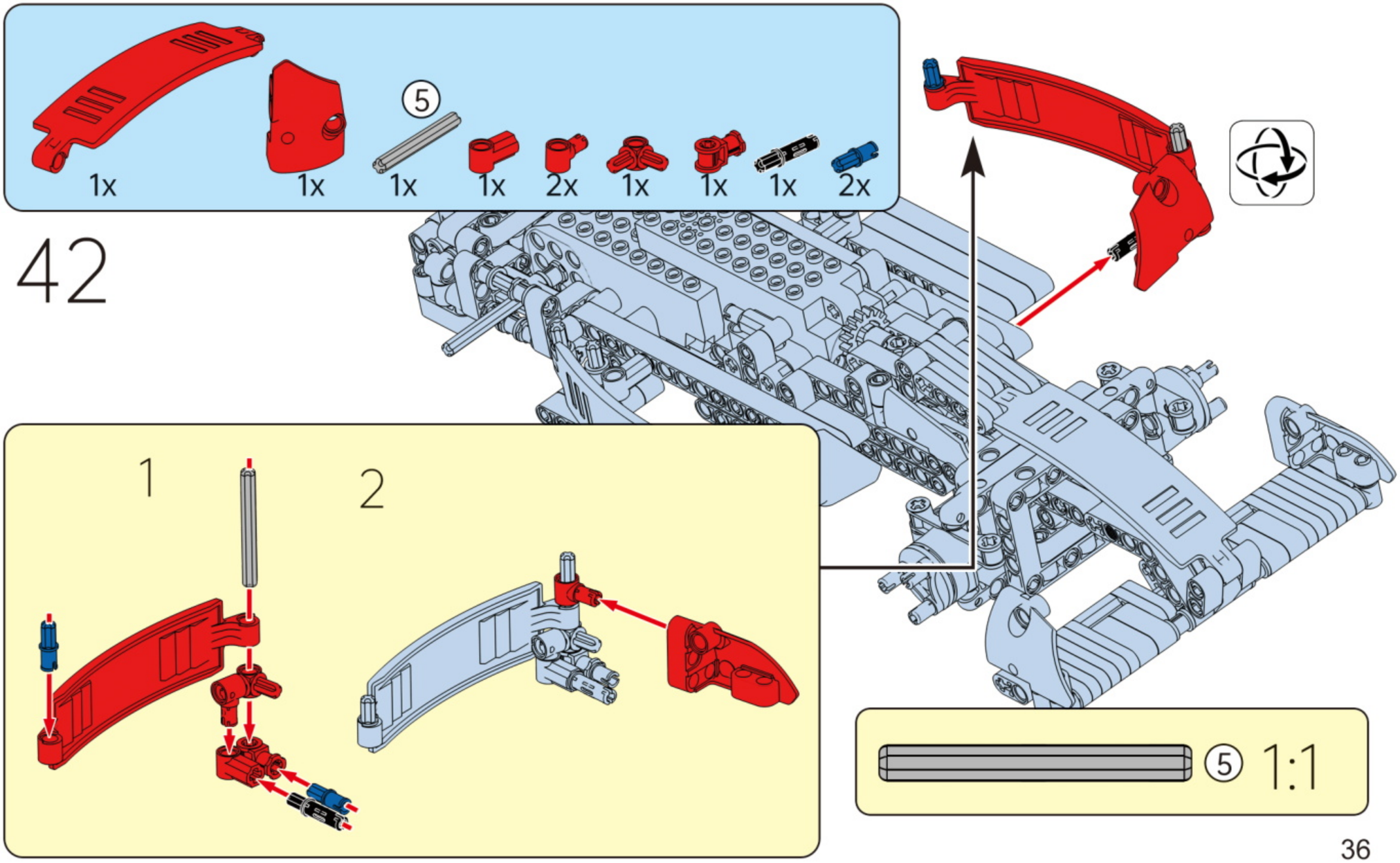
1x
1x
5
1x
1x
2x
1x
1x
1x
2x
42
1
2
5
1:1

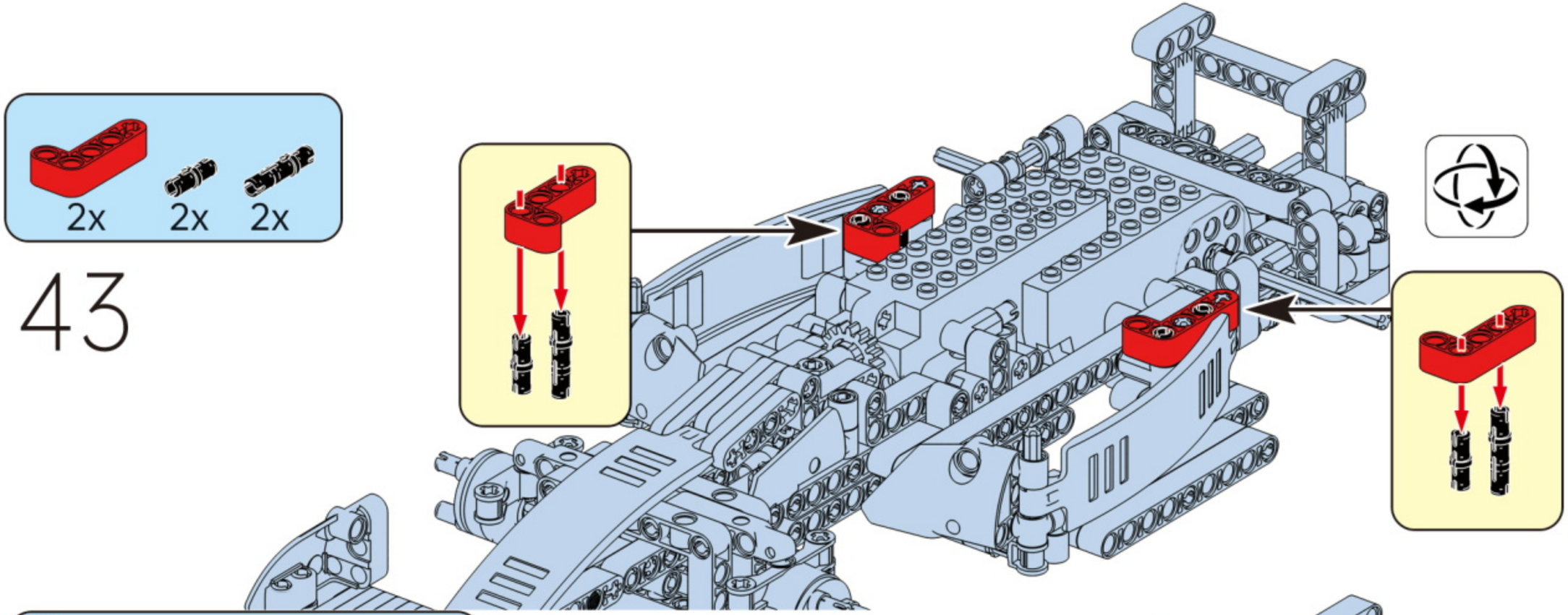
2x
2x
2x
43

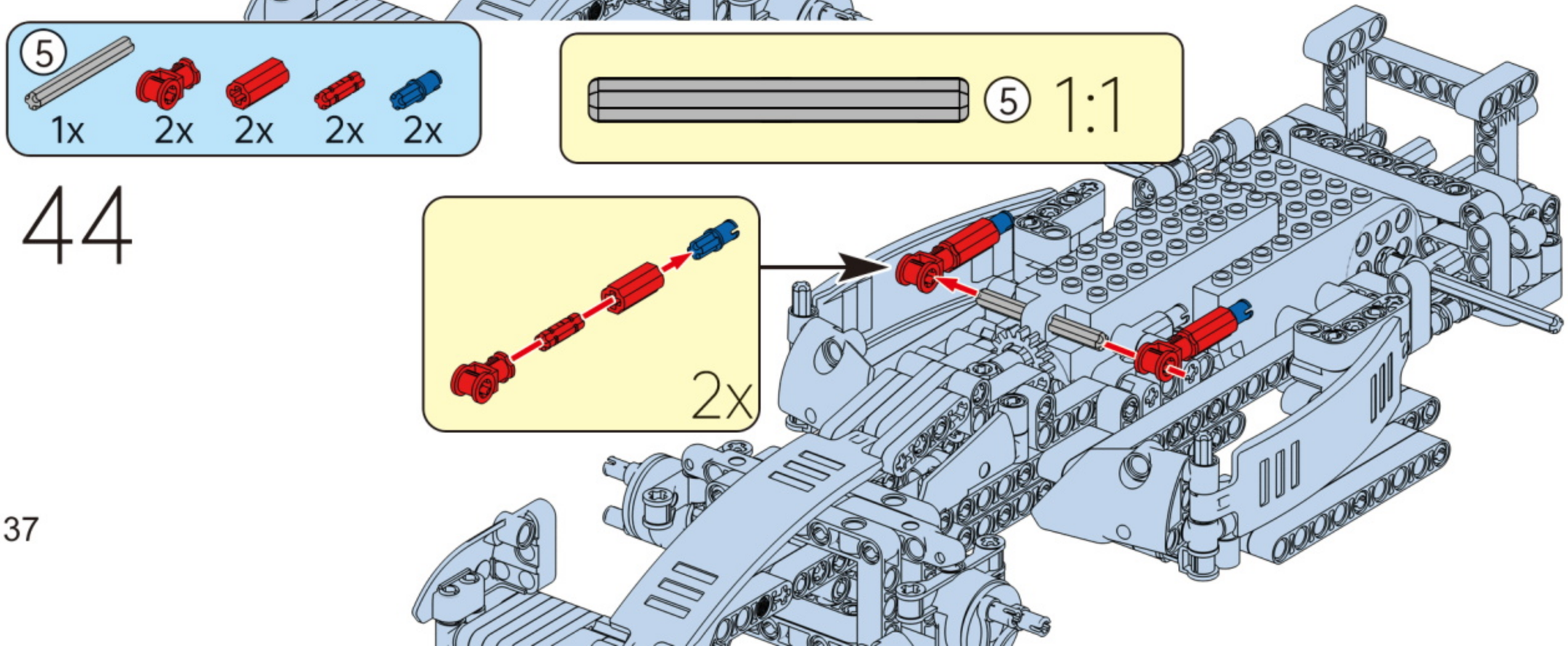
5
1x
2x
2x
2x
2x
5 1:1
2x
44

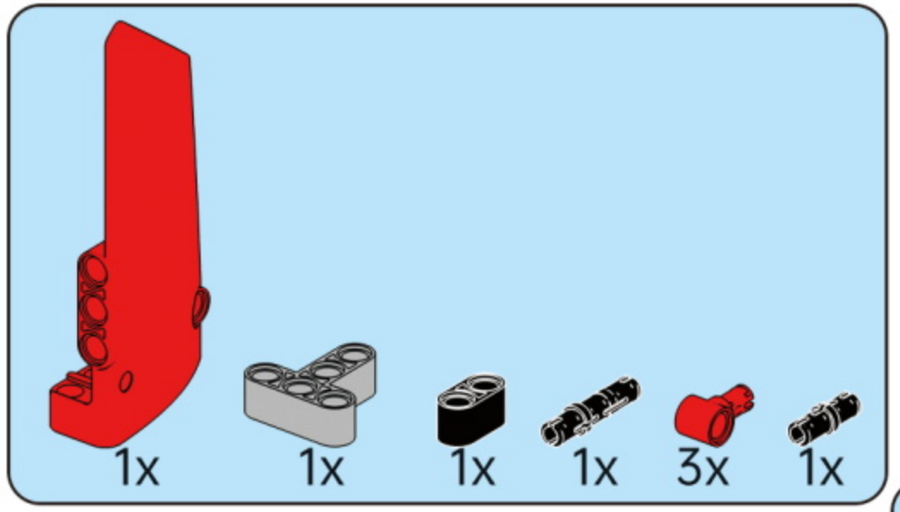

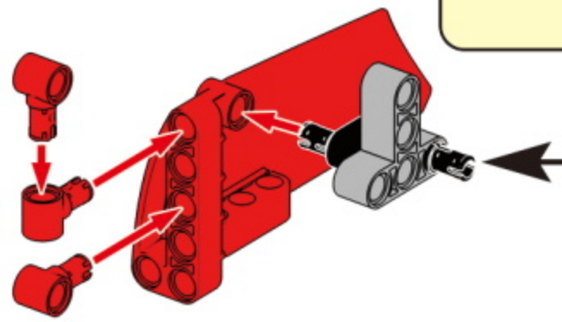

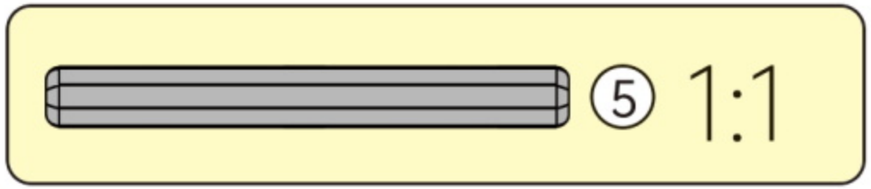

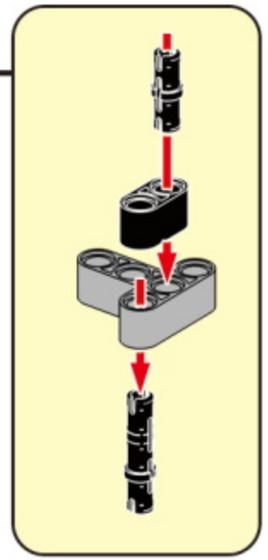

45

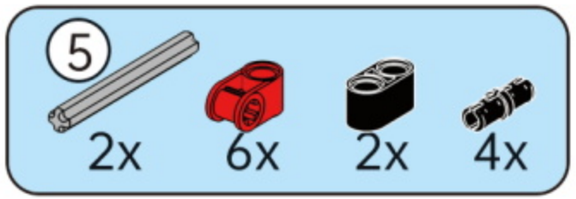

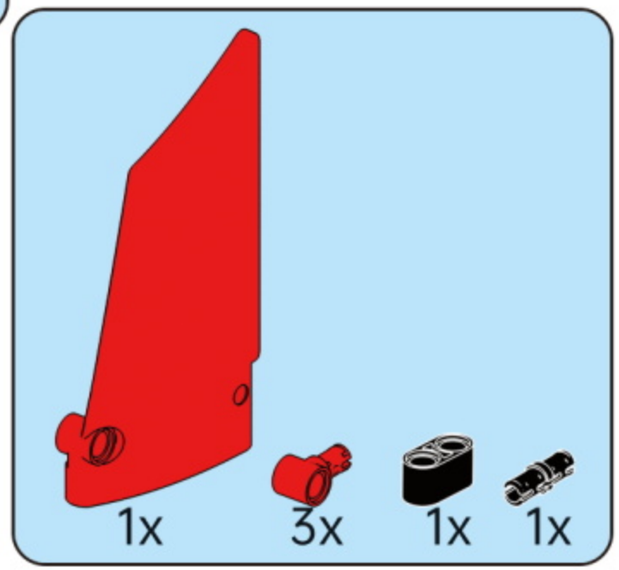

46

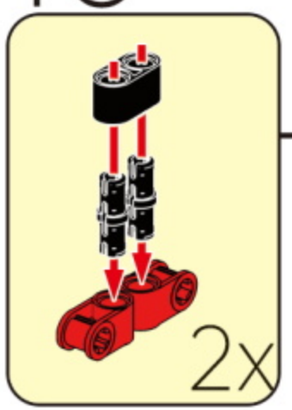

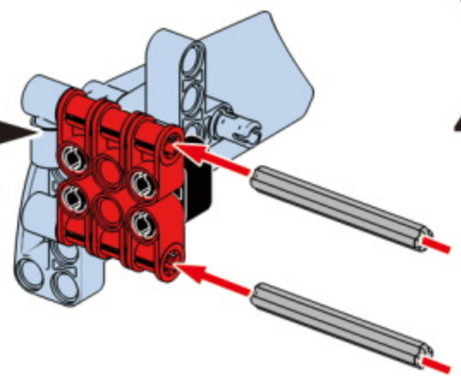

47

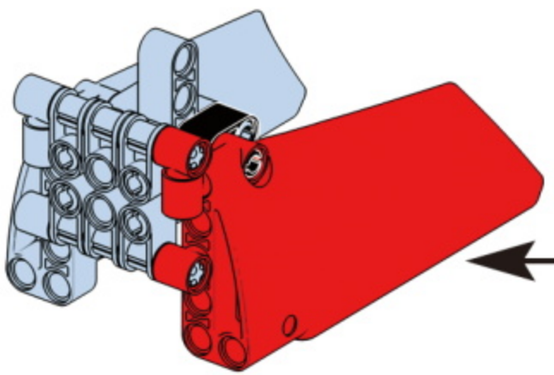

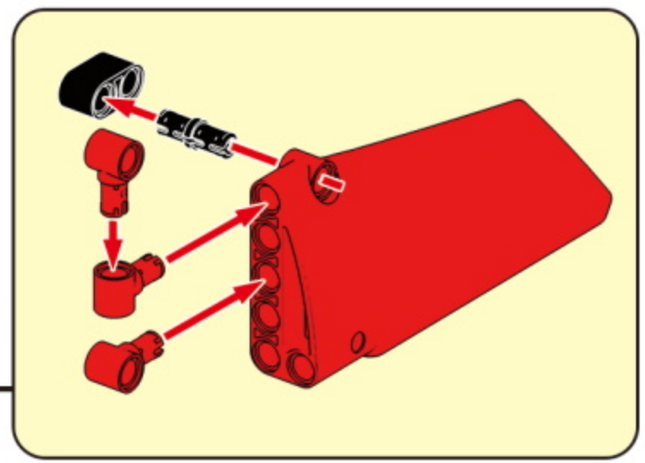

48

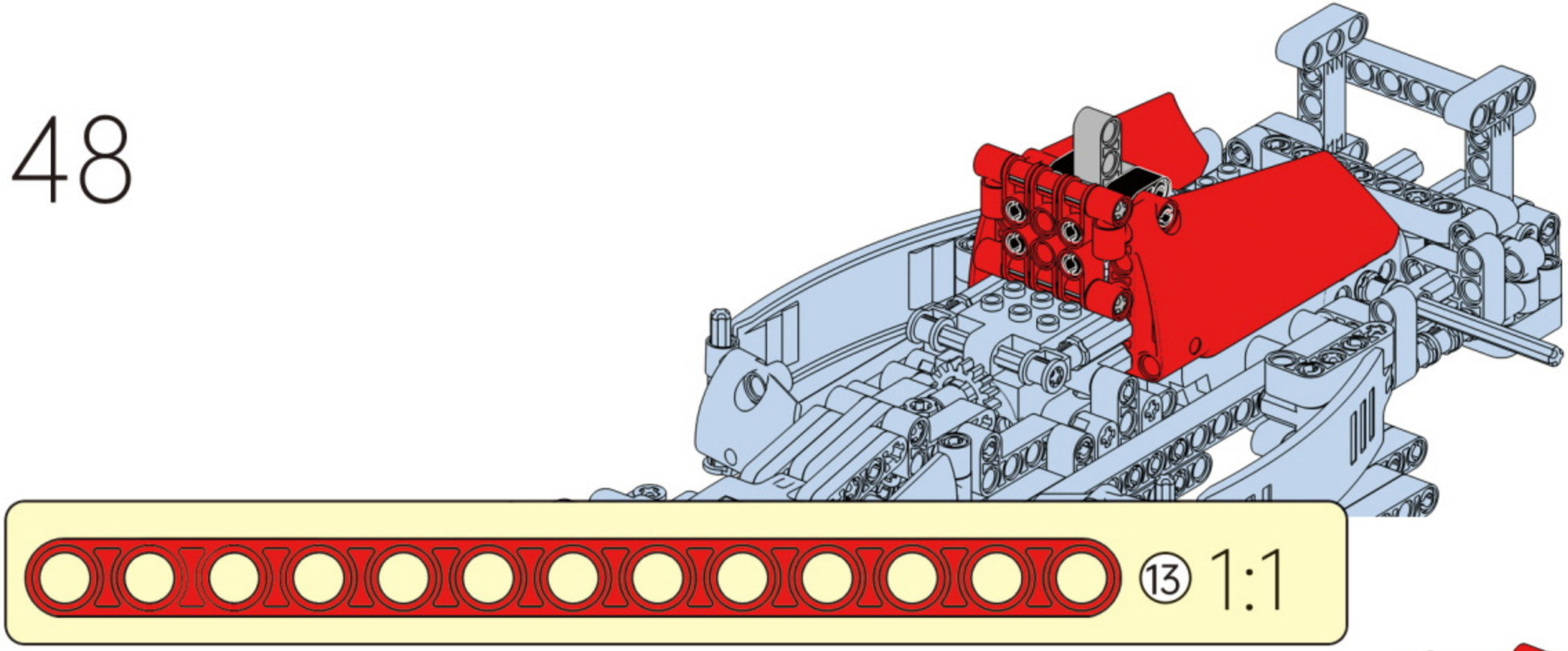

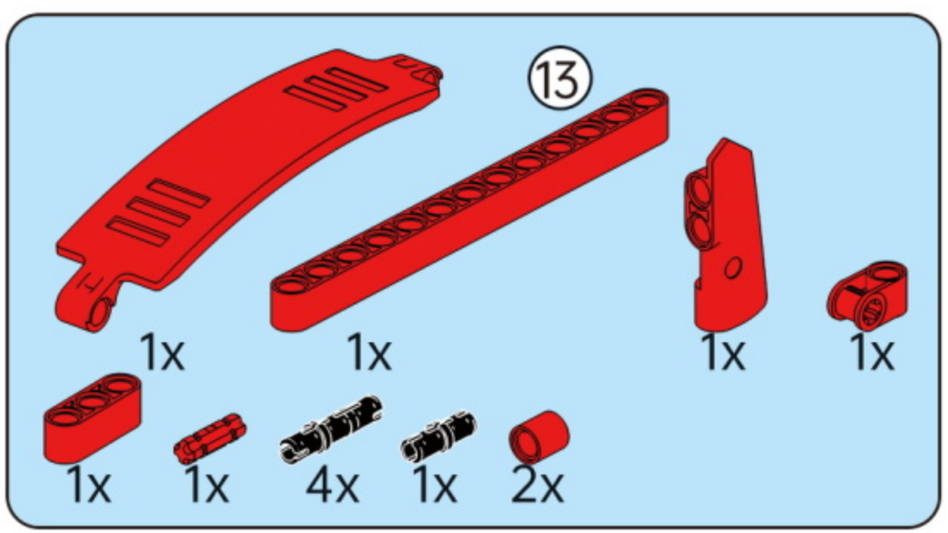

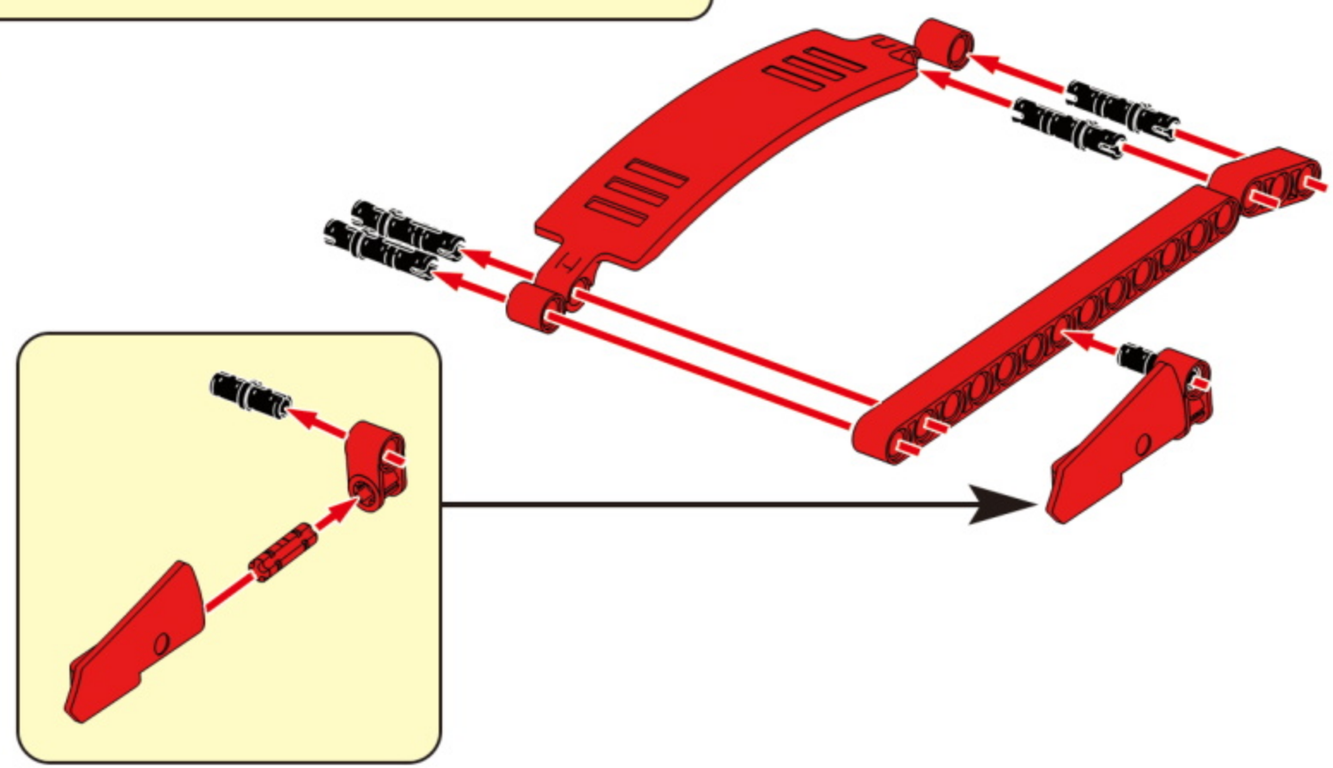

49

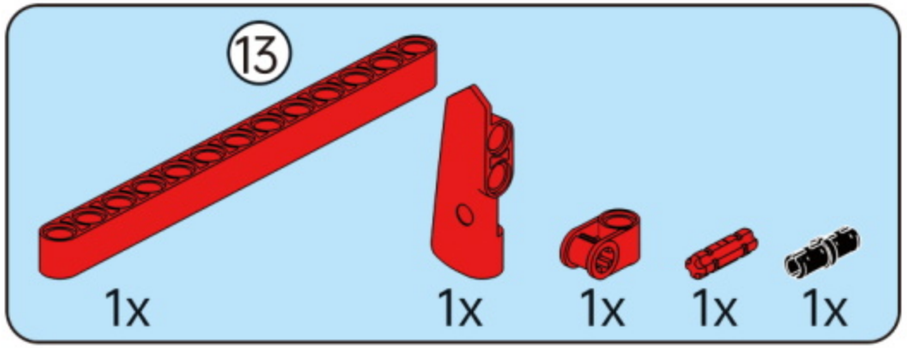

50

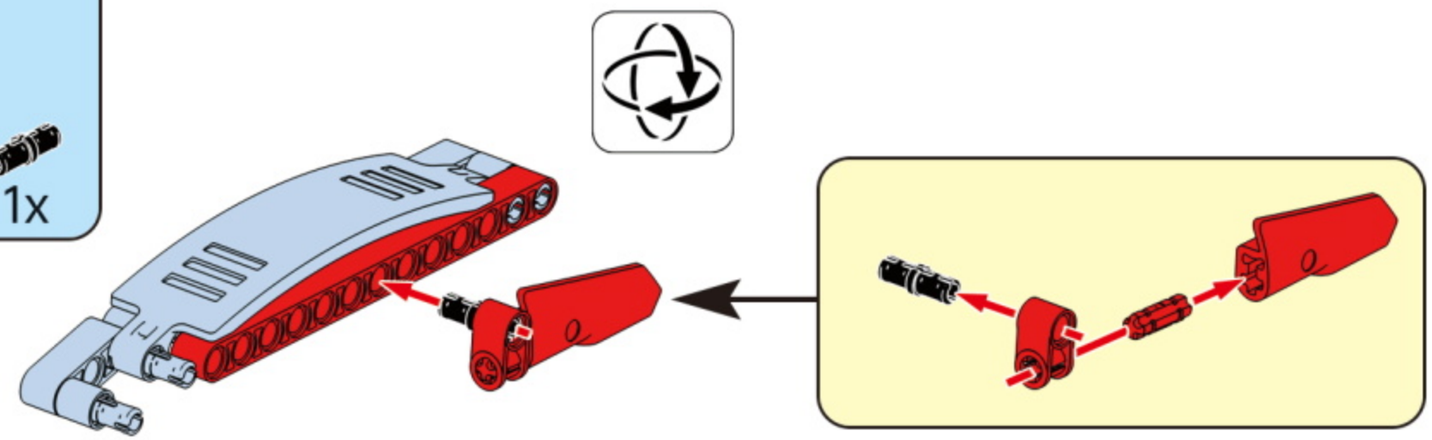

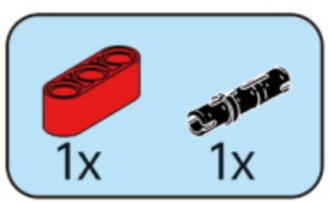

51

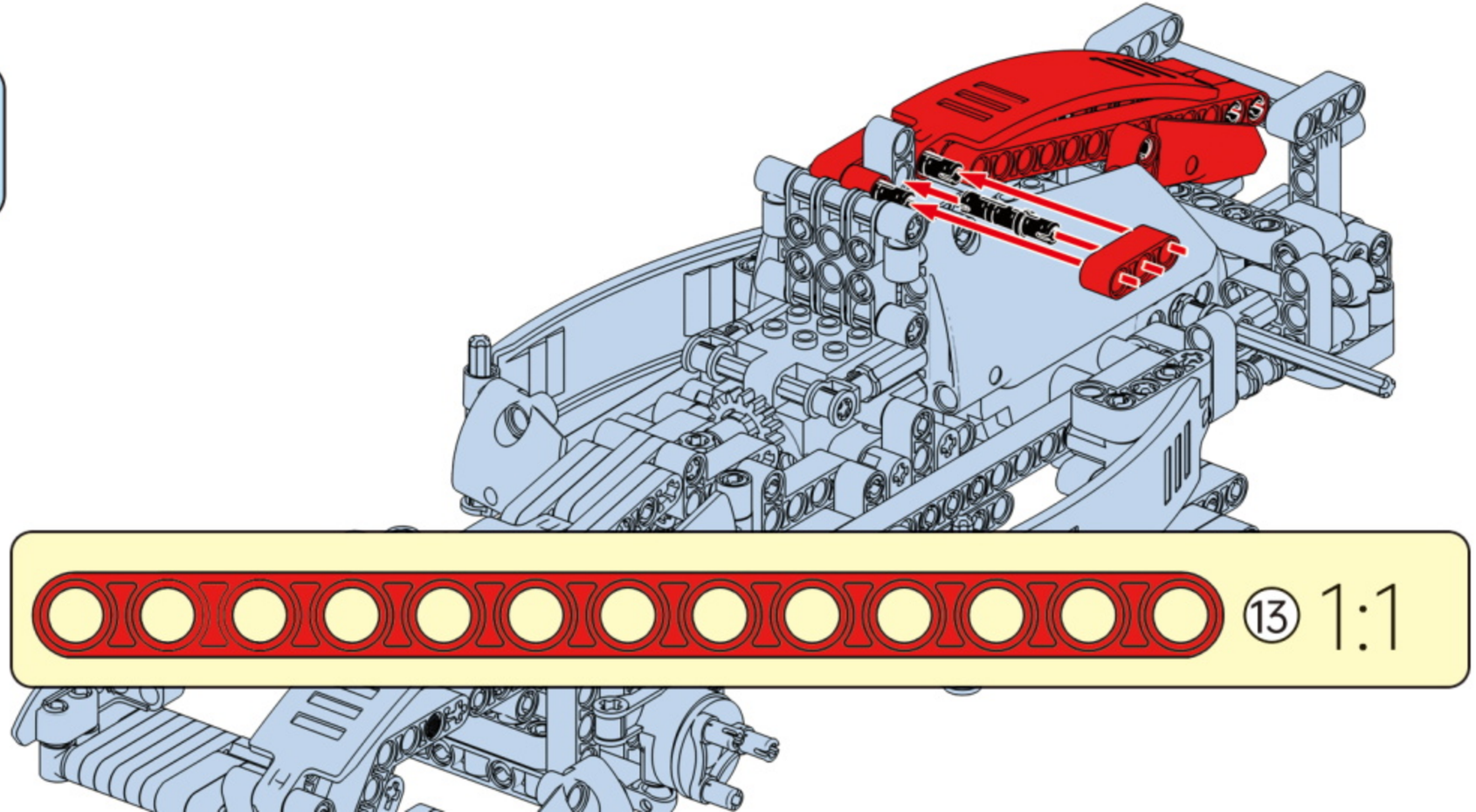

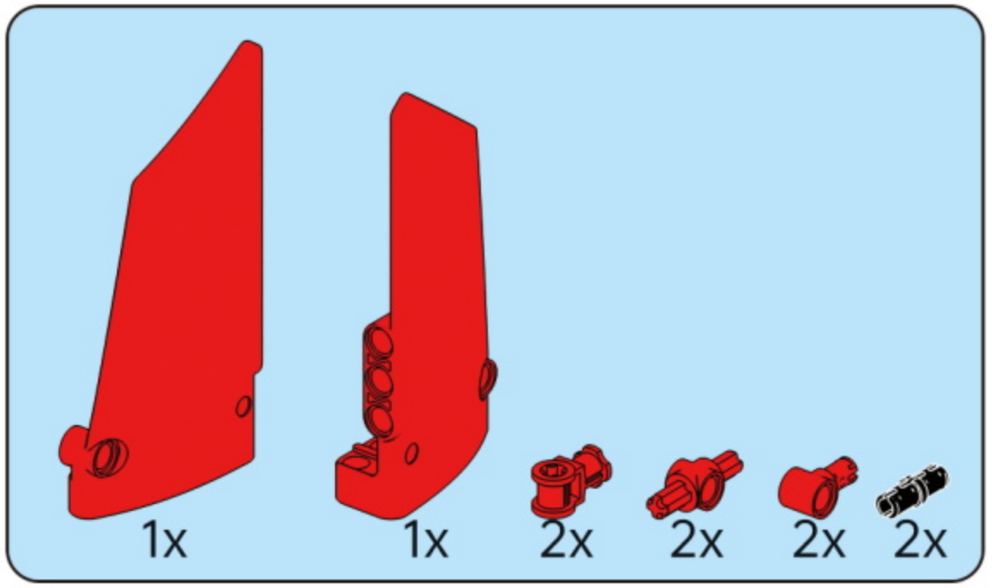

52

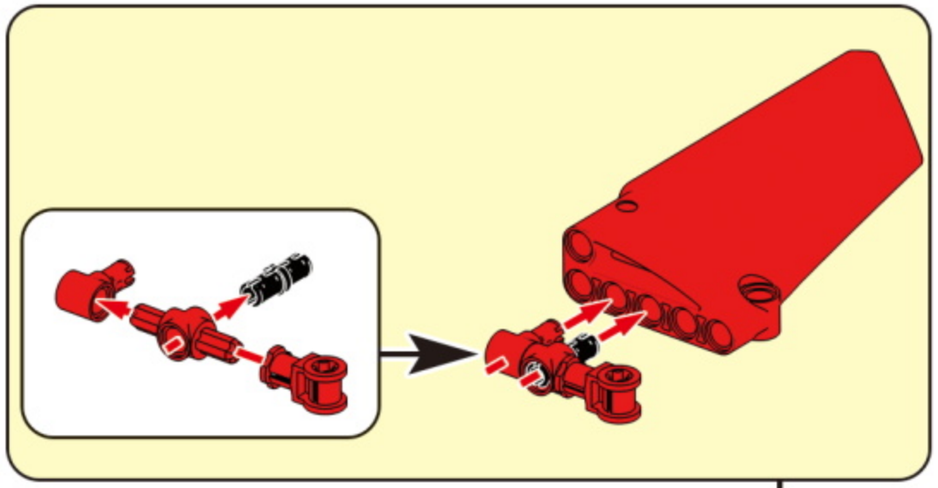

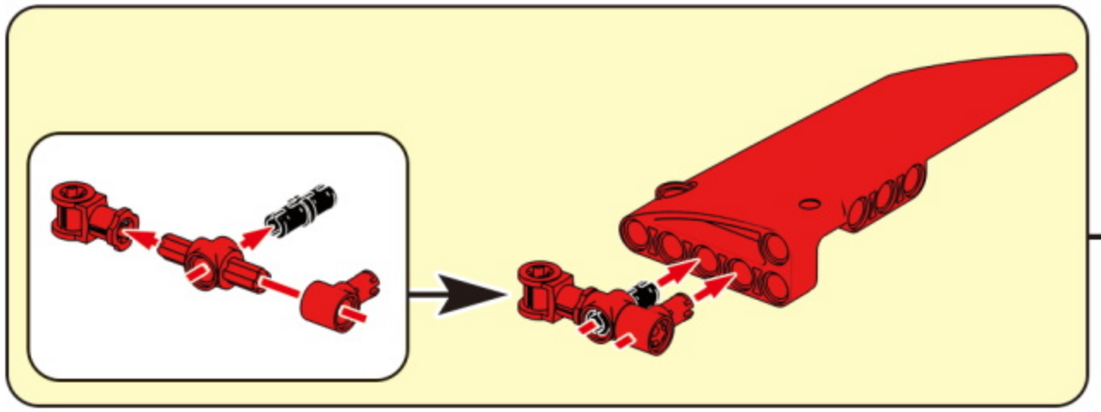

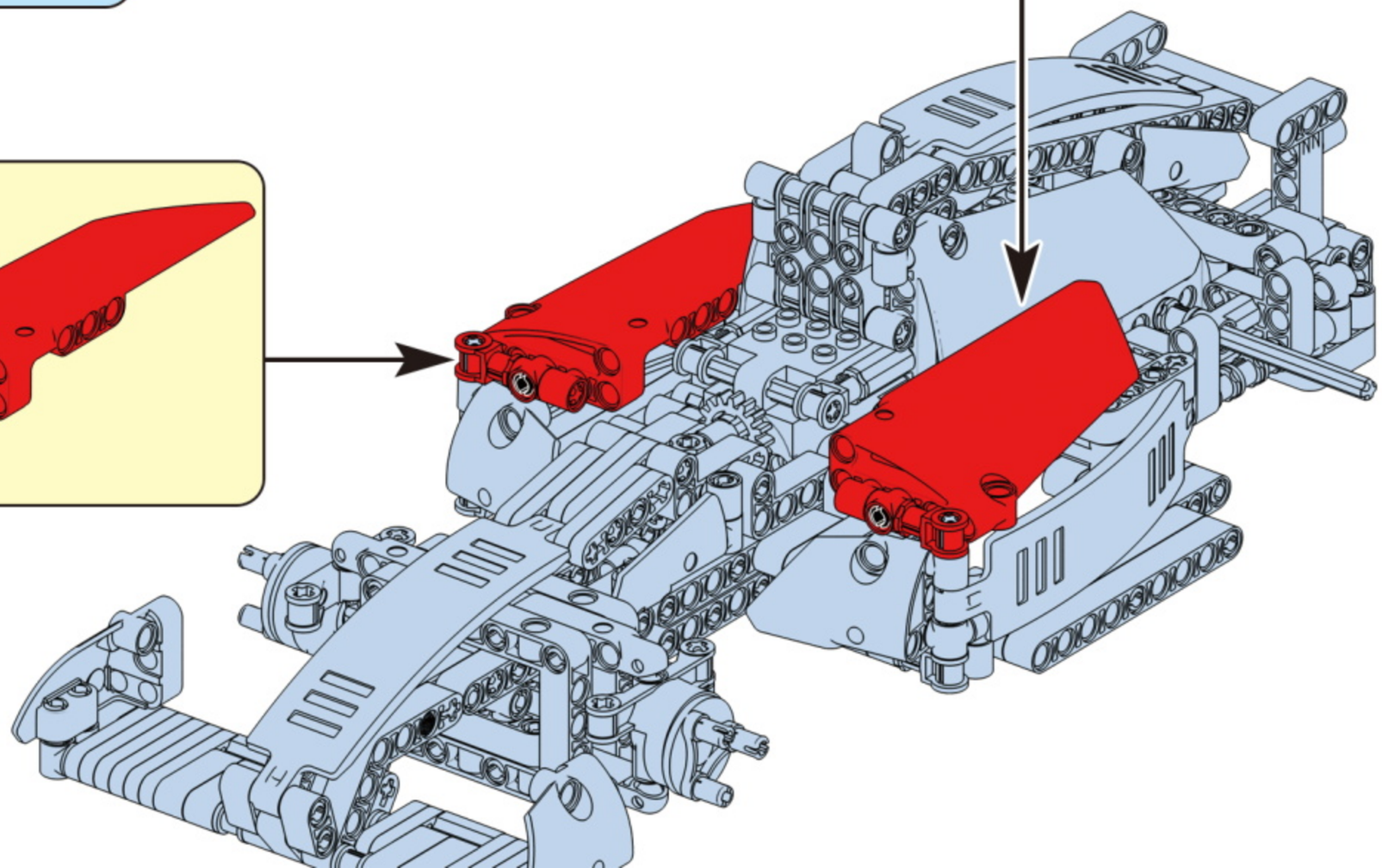

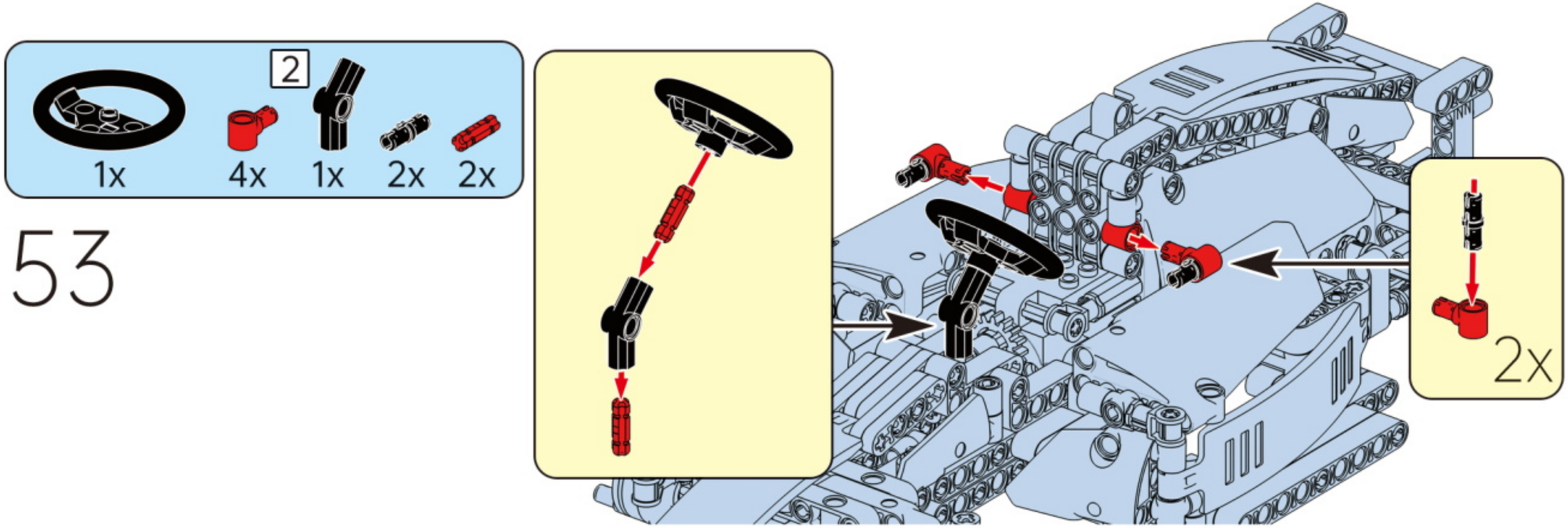
2
1x
4x
1x
2x
2x
53
2x

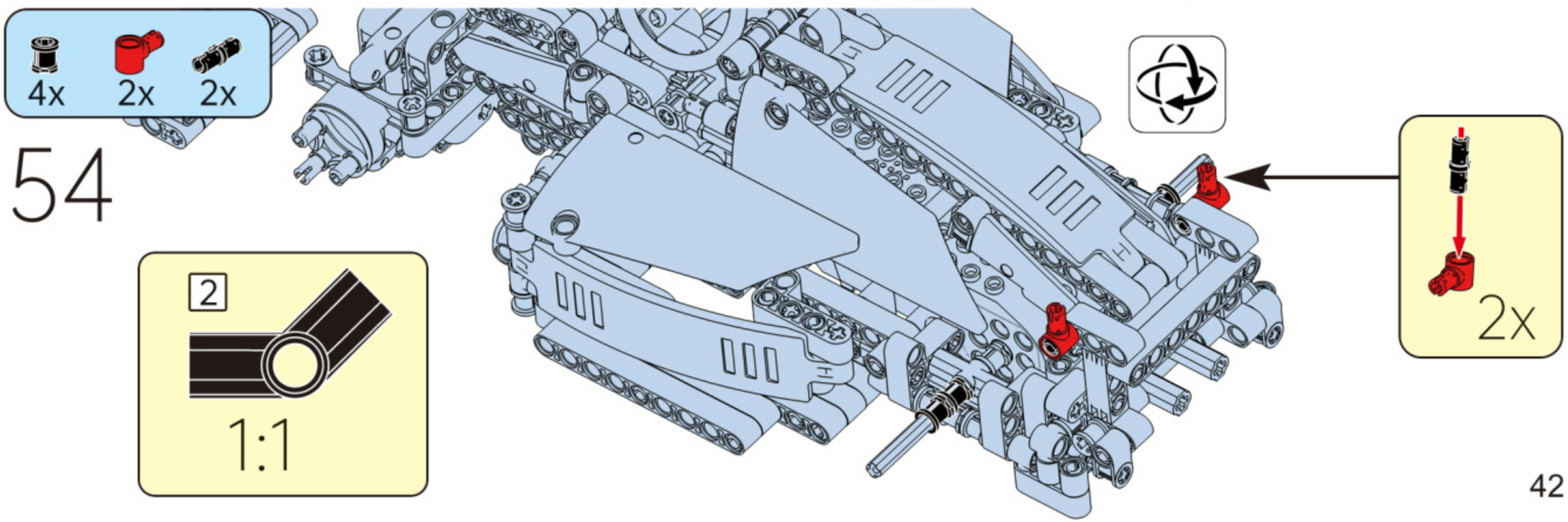
4x
2x
2x
54
2
1:1
2x

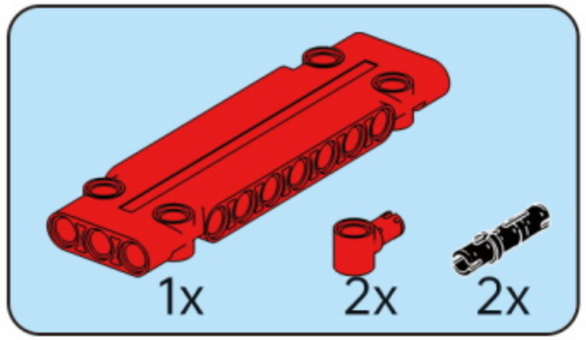

55

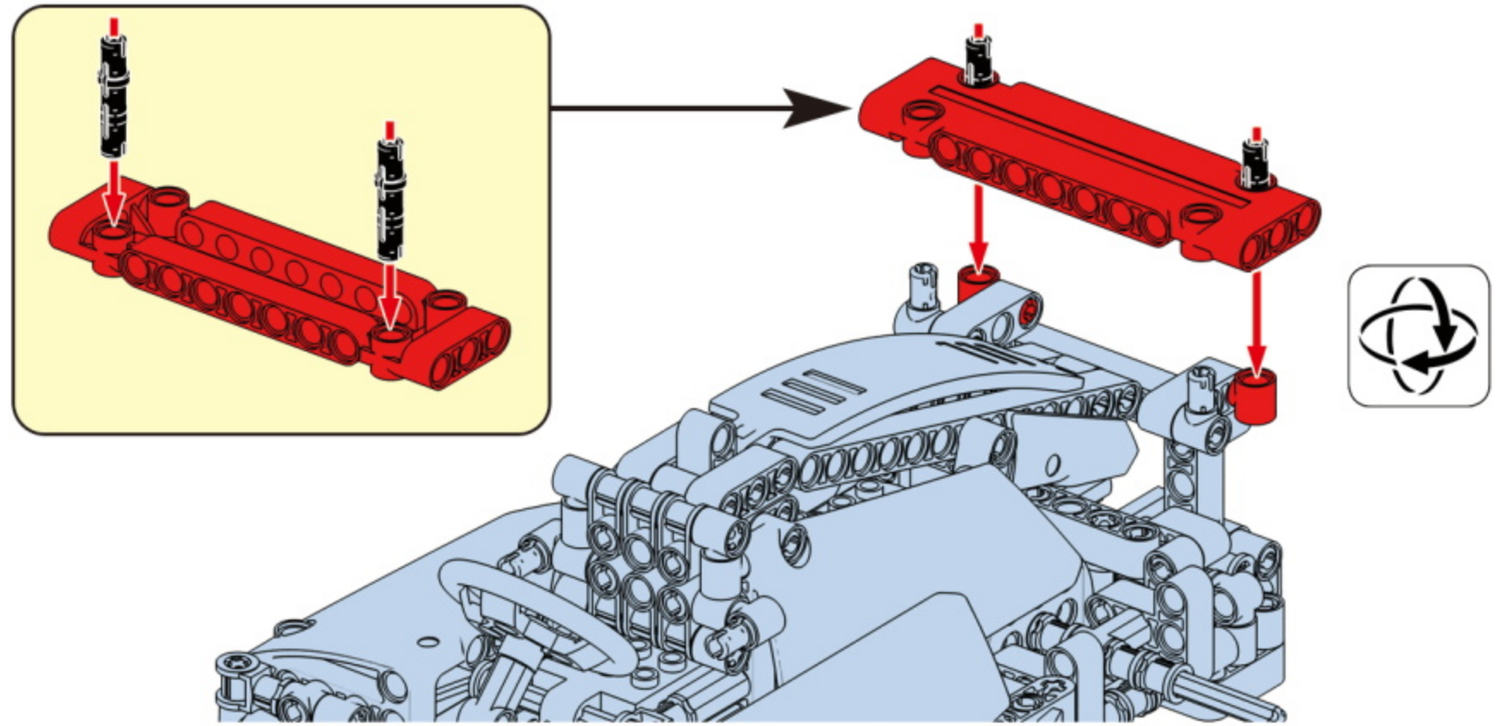

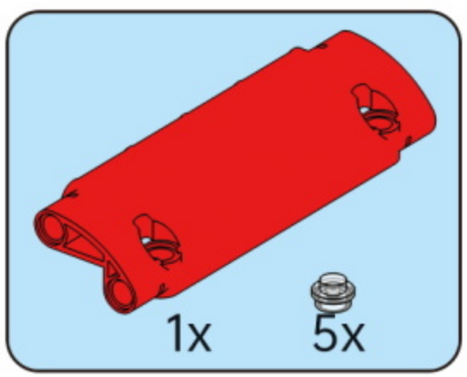

56

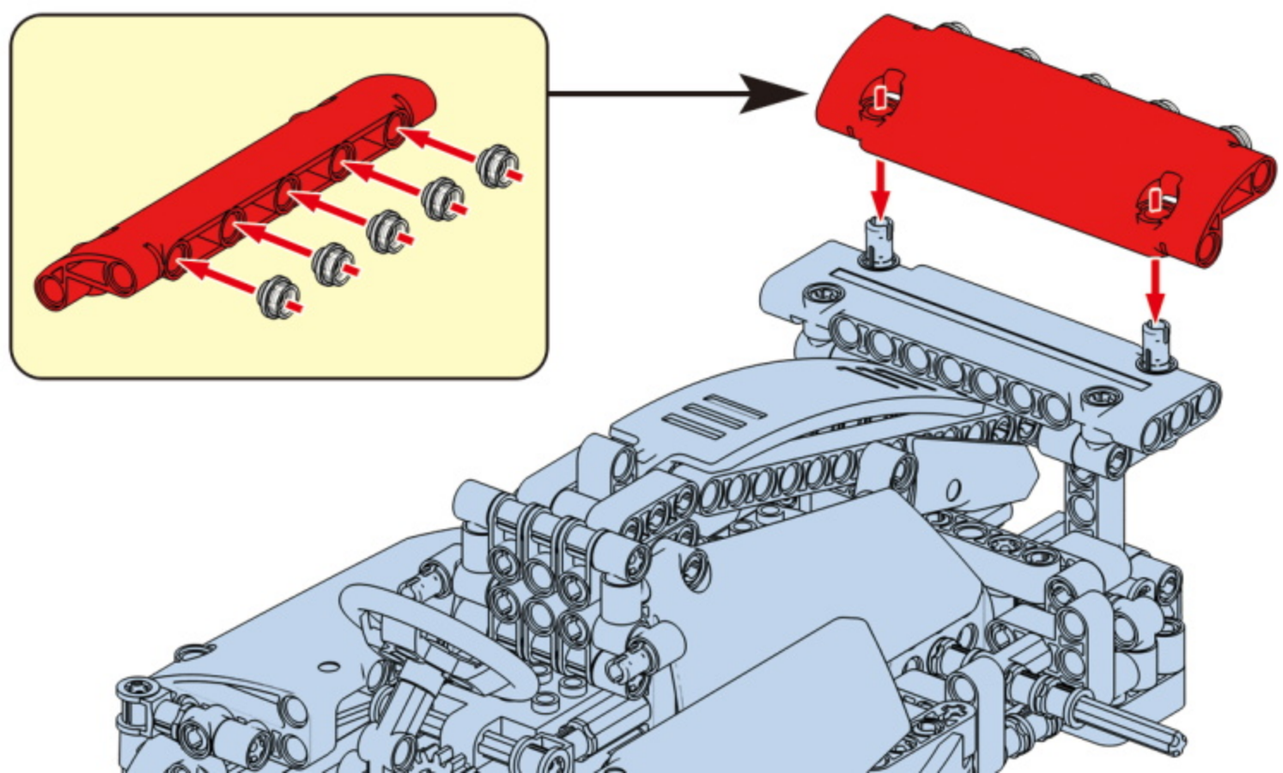

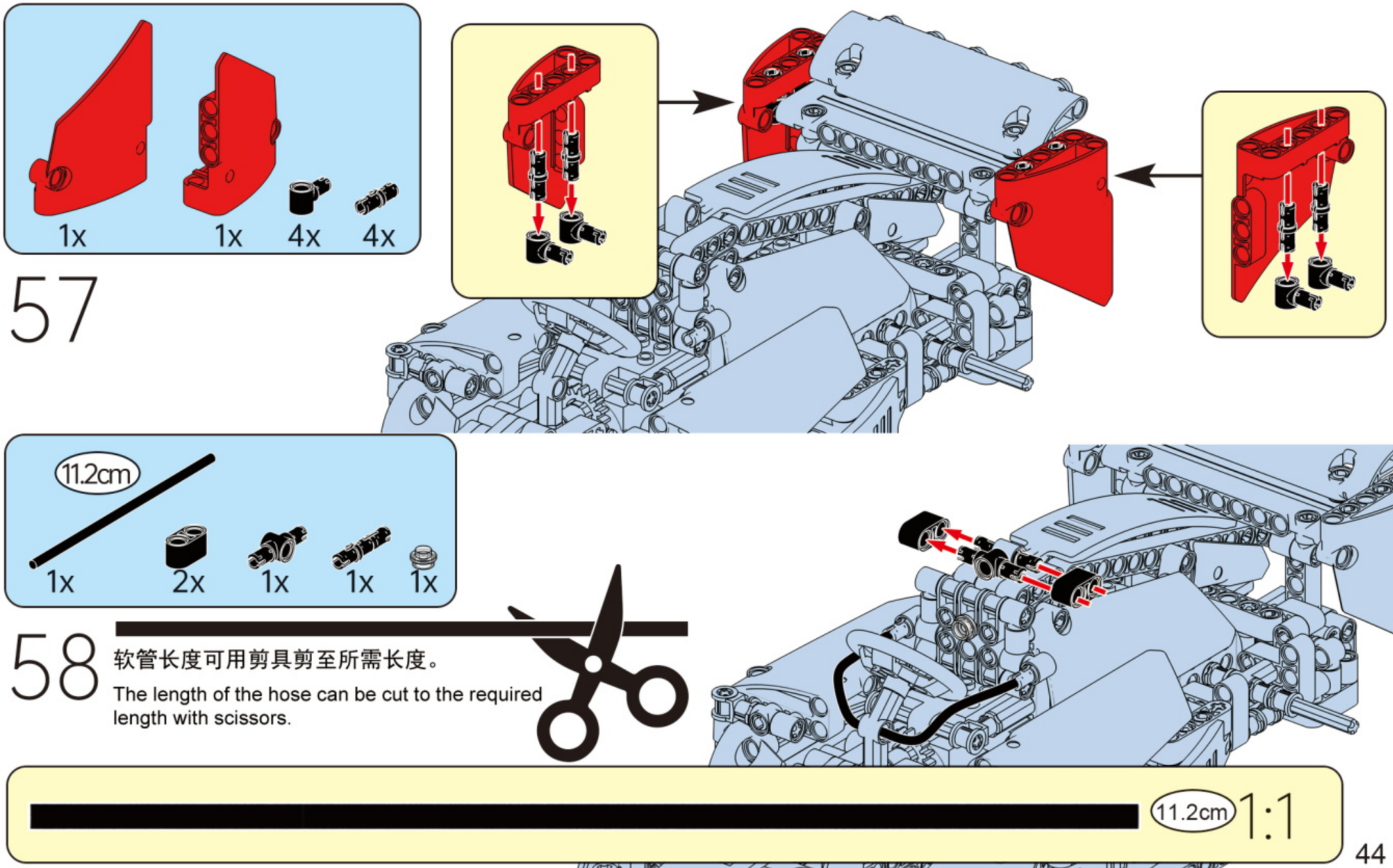
1x
1x
4x
4x
57
11.2cm
1x
2x
1x
1x
1x
58
软管长度可用剪具剪至所需长度。
The length of the hose can be cut to the required length with scissors.
11.2cm
1:1

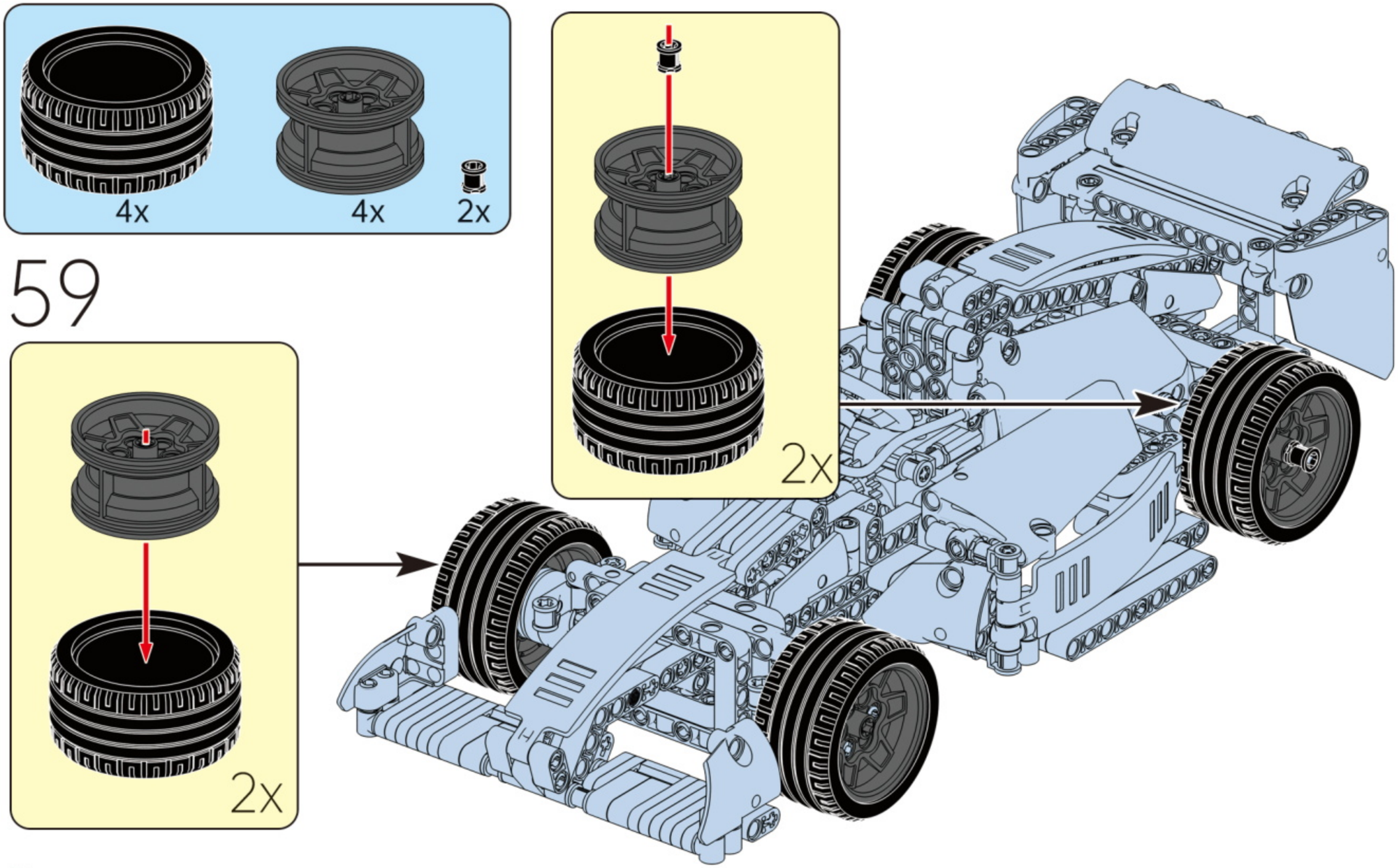
4x
4x
2x
59
2x
2x

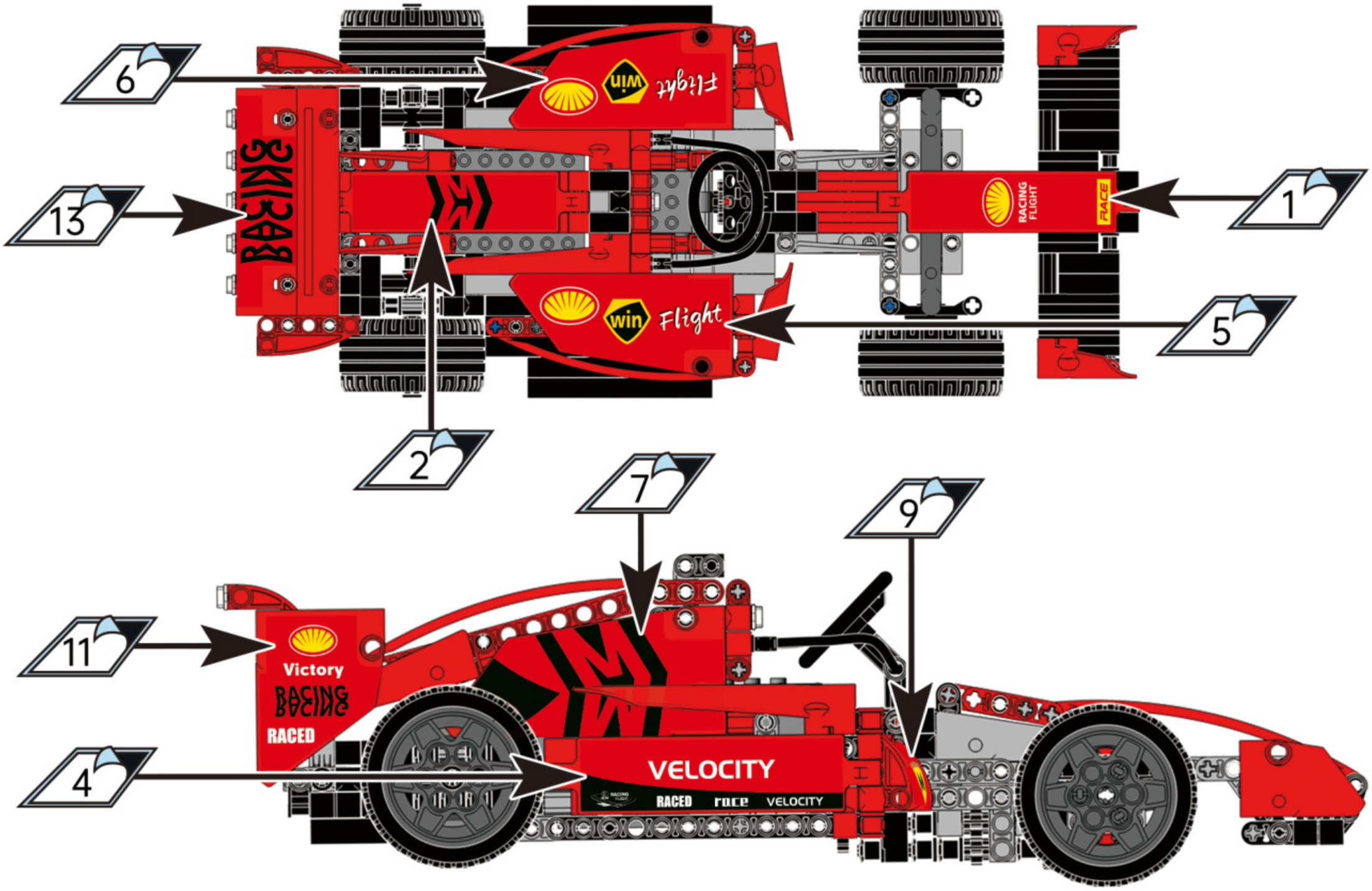
6
13
1
5
2
7
9
11
4
Flight
win
RACING
RACING FLIGHT
RACE
Victory
RACED
VELOCITY
RACED
race
VELOCITY

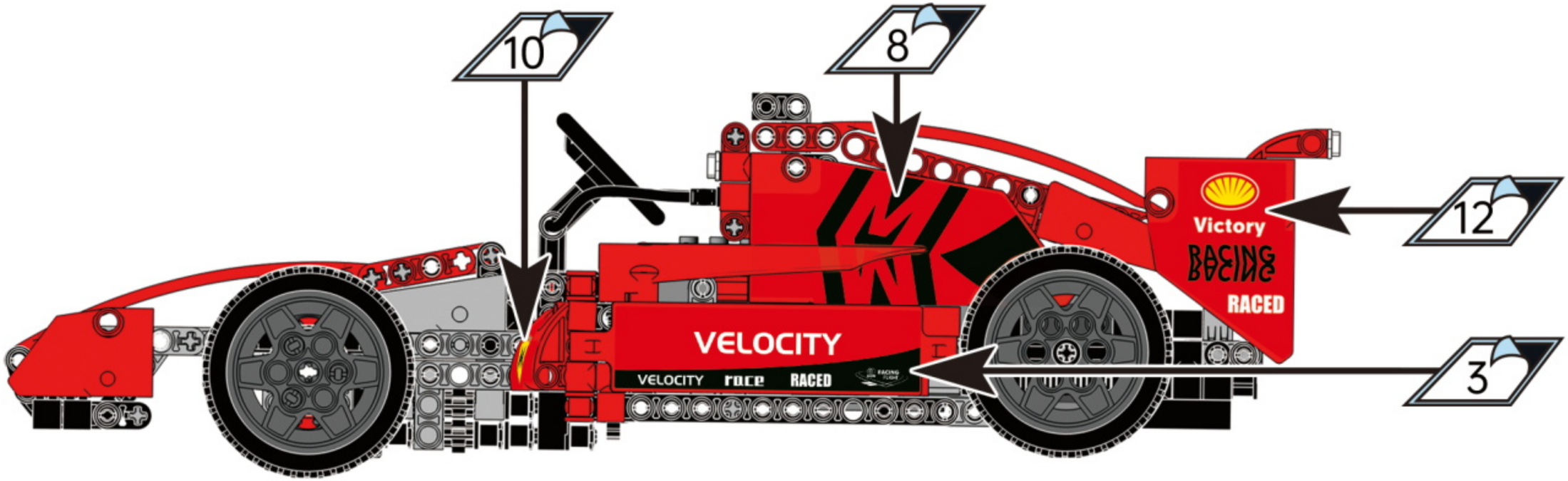
10
8
12
3
Victory
RACING
RACED
VELOCITY
VELOCITY
RACED

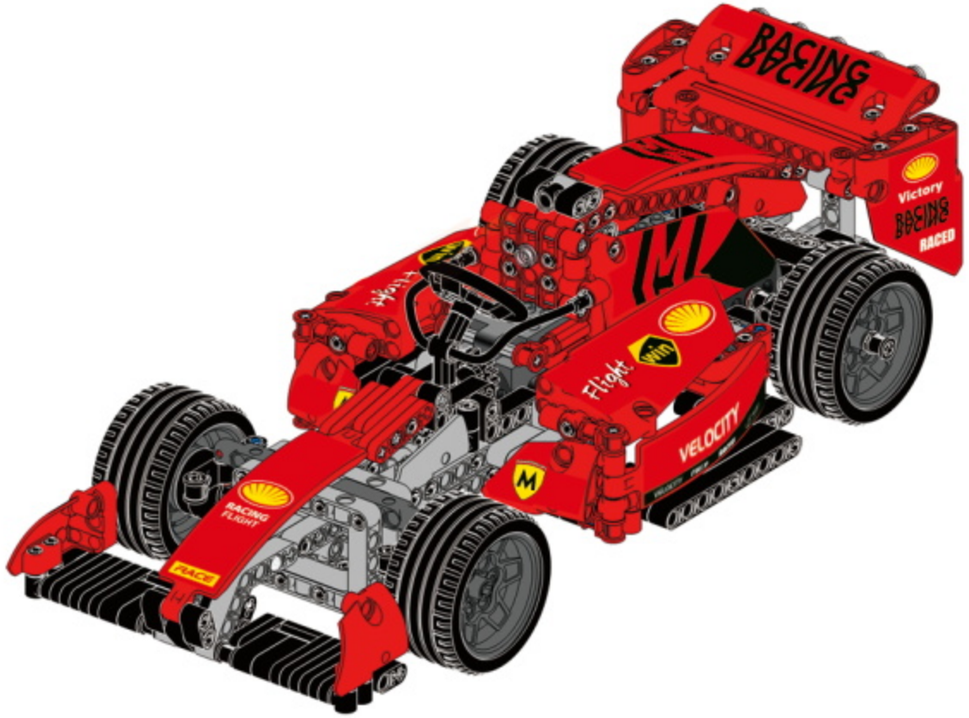
RACING
Victory
RACING
RACED
VELOCITY

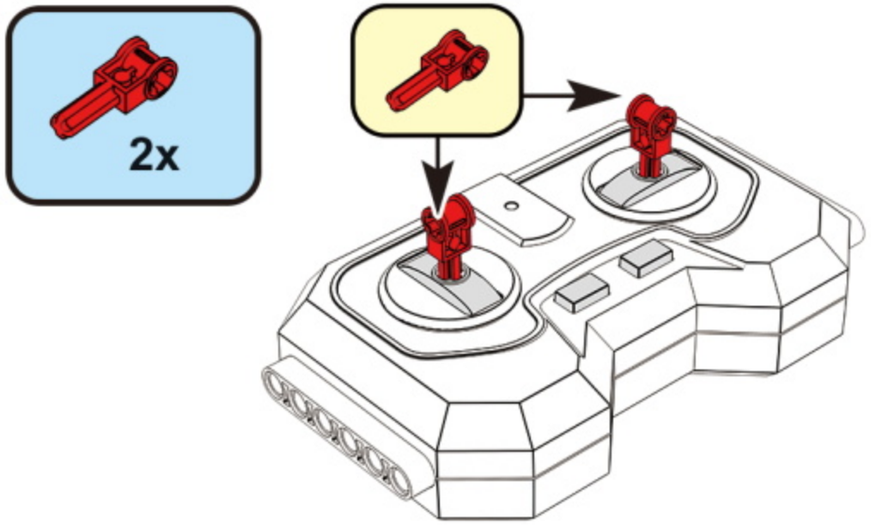

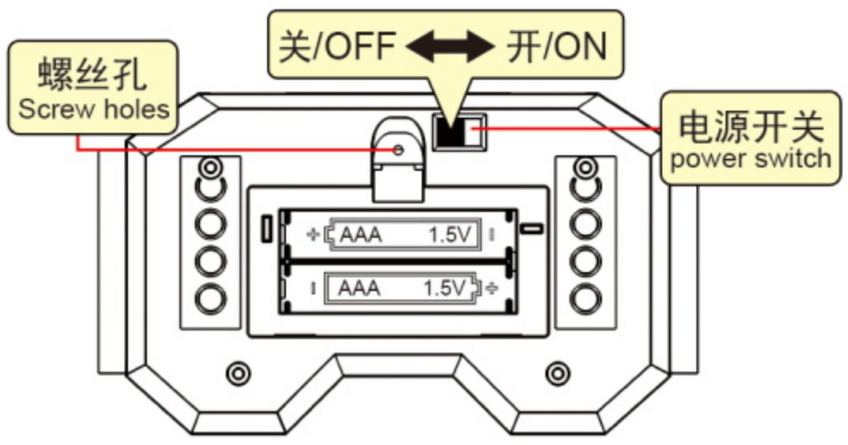

●用螺丝刀拧开后盖螺丝，按照电池的正确极性装入2节1.5V AAA非充电电池（非赠送，需自购）。

●Use a screwdriver to unscrew the screws of the back cover, and install 2 1.5V AAA non-rechargeable batteries according to the correct polarity of the battery (not gifted, need to be purchased by yourself).

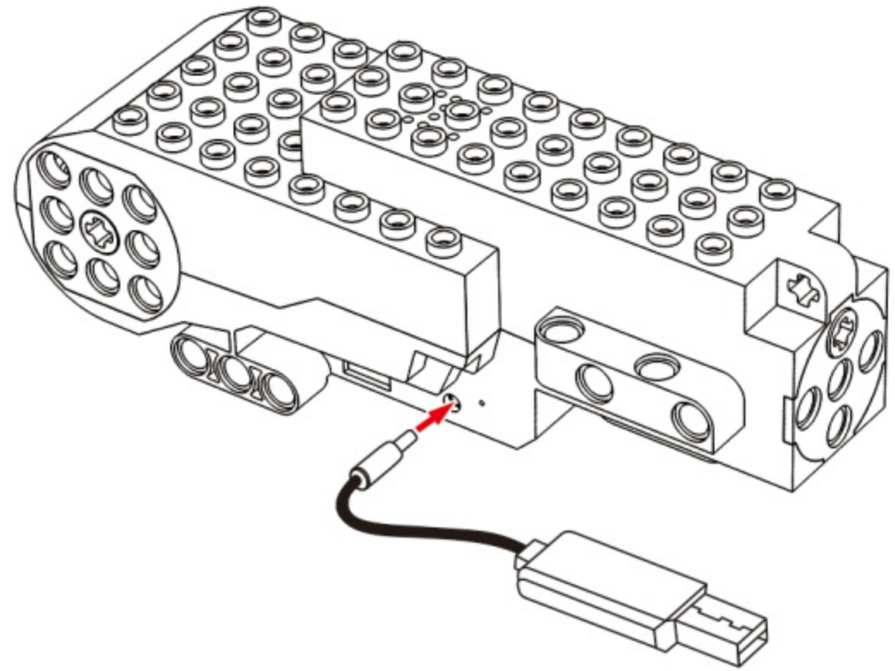

●产品内置充电锂电池首次使用需要先充好电，先将USB充电插头插人手机充电器或者充电宝设备(不建议使用2A以上的充电设备)，再将电池插头插人USB充电线插座，充电时USB插头亮红色指示灯，充满后红灯灭，充电时间约为3小时。

●The built-in rechargeable lithium battery of the product needs to be charged for the first time. First, plug the USB charging plug into the mobile phone charger or power bank device (the charging device above 2A is not recommended), and then plug the battery plug into the USB charging cable socket to charge. When the USB plug has a red indicator light when it is fully charged, the red indicator light is off, and the charging time is about 3 hours.

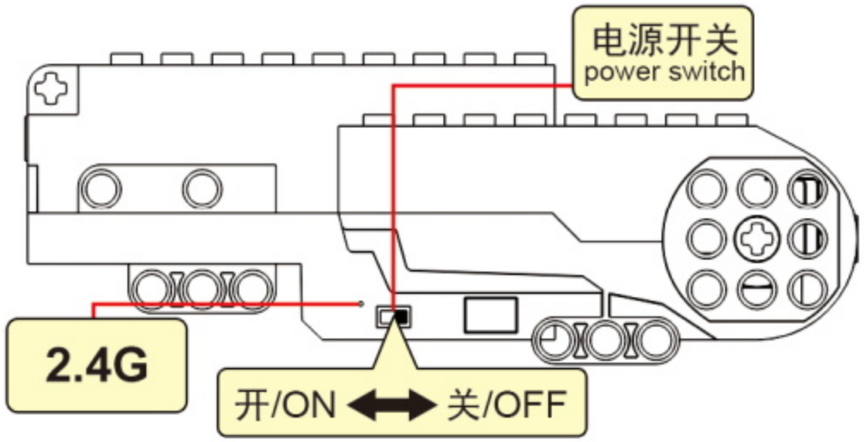

●2.4G对频说明：先将锂电池电源开关打开，再将遥控器电源开关打开，车底电源指示灯为对频时闪烁，对频成功后灯常亮，遥控器对频时指示灯闪烁，待指示灯熄灭为对频成功。

●2.4G frequency connection description：Turn on the power swift on the controller and lithium battery, the indication light will be flickering, and when the indication light is off the frequency connection is successful.

●产品功能：前进、后退、左转弯、右转弯，遥控距离约30米。

●Product function: forward, backward, turn left, turn right, the remote control distance is about 30 meters.

●遥控器跟锂电池对频成功后，若无操作2分钟后自动转为睡眠模式，重启需要按摇遥控器任意推杆进行重启，长时间不使用应关闭遥控器和锂电池的电源开关。

●After linking successfully，the will enter sleep mode if no operation after 2 minutes, restart needs to shake remote control any direction key. Please turn off the remote control and lithium battery power if it's not played for a long time.

操 作 使 用 说 明

- 螺丝刀将遥控器后盖的螺丝拧开，将 2 粒 1.5V“AAA”电池装于遥控器，并盖上后盖，装上螺丝。
- 产品使用 1 节 3.7V 充电锂电池(不可更换)。
- 将遥控器开关拨至“ON”的位置，将车身上的开关拨至“ON”的位置，操纵遥控器，即可开始玩耍。
- 当产品充电锂电池电量不足时，产品速度会减慢，需使用 USB 线充电。
- 如长时间不使用请关闭电源开关。如长时间存放，请关闭电源开关，将遥控器的电池取出，以免电池漏液造成对本产品的损坏。

OPERATION GUIDE

1.Use a screwdriver to loosen the screws on the back cover of the remote control, install two 1.5V "AAA" batteries on the remote control, close the back cover, and install the screws.
2.The product uses a 3.7V rechargeable lithium battery (not replaceable).
3. Turn the remote control switch to the "0N" position, turn the switch on the car body to the "ON" position, manipulate the remote control, and you can start playing.
4. When the product's rechargeable lithium battery is low, the product speed will slow down and you need to use a USB cable to charge.
5. If you do not use it for a long time, turn off the power switch. If it is stored for a long time, please turn off the power switch and take out the battery of the remote control to avoid damage to the product caused by battery leakage.

注 意 事 项	CAUTION
● 不同类型的电池或新旧电池不能混用，用尽的电池应从玩具中取出。 ● 电池的更换应在成人的监护下，电池应以正确的极性放入，电源端子不得短路。 ● 非充电电池不能充电，充电电池充电前应从玩具中取出，充电电池只能在成人的监护下充电，如果电池损坏或漏液请勿充电。 ● USB 充电线不是玩具,必须定期检查电线、插头、外壳及其它部件是否损坏，发现损坏时应停止使用，直到修复完好。 ● 产品充电锂电池不能连接到多于推荐数量的电源上。 ● 清洁玩具前应与 USB 充电线断开连接。 ● 产品充电锂电池只能使用推荐的 USB 充电线,充电线不是玩具。 ● 在供电过程中,USB 充电线和充电宝移动电源会出现微温,属正常现象。 ● USB 充电线只能连接到输出电压为 5.0V 220mA 的电源上。 ● 型号相同或与推荐型号等同的电池才可以使用。 ● 电池不要靠近火源或任何热源、不能沾水、不能摔打或在阳光下爆晒。 ● 如果皮肤或衣服沾到电池漏液，要立即冲洗。 ● 充电电池应定期给予充电，有利于电池的存放，充电时应采用型号相同或与推荐型号笔同的充电器。 ● 塑料袋不是玩具，会造成窒息危险，拆开后请妥善处理。	1. Different types of batteries or old and new batteries cannot be used together. Exhausted batteries should be taken out of the toy. 2. The replacement of the battery should be under the supervision of an adult, the battery should be inserted with the correct polarity, and the power terminal should not be short-circuited. 3. Non-rechargeable batteries cannot be charged. Rechargeable batteries should be removed from the toy before charging. Rechargeable batteries can only be charged under adult supervision. Do not charge if the battery is damaged or leaks. 4. The USB charging cable is not a toy. You must check the wires, plugs, shells and other parts regularly for damage. If you find any damage, you should stop using it until the repair is complete. 5. The product's rechargeable lithium battery cannot be connected to more than the recommended number of power sources. 6. Disconnect the USB charging cable before cleaning the toy. 7. Only the recommended USB charging cable can be used to recharge the lithium battery of the product. The charging cable is not a toy. 8. During the power supply process, the USB charging cable and power bank mobile power supply will appear slightly warm, which is a normal phenomenon. 9. The USB charging cable can only be connected to a power supply with an output voltage of 5.0V 220mA. 10. Only batteries of the same model or equivalent to the recommended model can be used. 11. Keep the battery away from fire or any heat source, keep it away from water, drop it or explode in the sun. 12. If the battery leaks on your skin or clothes, rinse immediately. 13. The rechargeable battery should be charged regularly, which is conducive to the storage of the battery. When charging, the charger of the same model or the same model as the recommended one should be used. 14. Plastic bags are not toys and may cause suffocation hazard. Please dispose of them properly after disassembling.

TECHNOL MODEL

1:14

F1.SF90

R/C

FCC Statement

This equipment has been tested and found to comply with the limits for a Class B digital device, pursuant to Part 15 of the FCC Rules. These limits are designed to provide reasonable protection against harmful interference in a residential installation. This equipment generates uses and can radiate radio frequency energy and, if not installed and used in accordance with the instructions, may cause harmful interference to radio communications. However, there is no guarantee that interference will not occur in a particular installation. If this equipment does cause harmful interference to radio or television reception, which can be determined by turning the equipment off and on, the user is encouraged to try to correct the interference by one or more of the following measures:

-- Reorient or relocate the receiving antenna.

-- Increase the separation between the equipment and receiver.

-- Connect the equipment into an outlet on a circuit different from that to which the receiver is connected.

-- Consult the dealer or an experienced radio/TV technician for help.

This device complies with part 15 of the FCC Rules. Operation is subject to the following two conditions:

(1) This device may not cause harmful interference, and (2) this device must accept any interference received, including interference that may cause undesired operation.

Changes or modifications not expressly approved by the party responsible for compliance could void the user's authority to operate the equipment.