COMGROW T-500

User Manual

WELCOME TO COMGROW !

Founded in 2017, Comgrow was formed by people passionate about technology that helps you make things. With this deep-rooted dedication, we wanted to make digital manufacturing processes more accessible, giving educators, engineers, a manufacturer, small businesses, and tinkerers the power to make anything.

Headquartered in Southern China, Shenzhen, Comgrow's dedicated staffs are committed to providing impressive service. We offer top-class quality materials, machines, and accessories - from industrial-grade 3D printers to DIY laser cutters - all of which have been tested and approved by our industry experts. Our fantastic team in customer service is here from Monday to Saturday to help with any problem you have encountered, from suggesting suitable filaments for your specific projects to discussing which 3d printer is best for you. We're here to make 3D printing, laser cutting, and CNC milling possible.

Service Email: service@comgrow.com

For related installation files, please check:
https://www.comgrow.com

Join our Facebook support group:
https://www.facebook.com/groups/comgrow/

Comgrow Amazon after-sale service:
laserengravingcnc@comgrow.com

1. Note 01
2. Parameters 02
3. Package List 03
4. Assembly 04
    gantry 04
    support base 04
    cable drag chain 05
    touchscreen 06
    filament holder 06
    connect wires 07
    accelerometer 08
6. Touchscreen 09
    main menu 09
    move, temperature 10
    extruder, more 11
    bed mesh, z calibrate 12
    limits, fan, macros 13
    led, console, save config, klipperscreen 14
    network 15
7. Bed Leveling 16
8. Configuration 18
9. Load/unload Filament 18
10. Print 19
11. Mainboard 19

Note

- For your safety, using T500 for any purpose other than 3d printing is not recommended, or the risks are on yourself.
- To ensure best print quality, please don't place T500 on a tilt or waggling platform.
- The shaking of the machine will affect the printing quality of the printer.
- Please do not place the machine near flammable and explosive materials or near highheat sources.
- Please place the machine in a ventilated, cool and dust free environment.
- It is recommended to use the material recommended by the manufacturer to avoid machine damage.
- Do not use any other power cable except the one supplied in package. Always use a grounded three-prong power outlet.
- Wearing cotton gloves when operating the printer is strictly prohibited. Such gloves may become tangled in the printer's moving parts which leads to burns, possible injury, or printer damage.
- Please wait until the print bed cools down to remove the print.
- It's not recommended to use the third party firmware or mainboard etc, or the warranty will be void.
- Clean the printer frequently. Always turn the power off when cleaning, and wipe with a dry cloth to remove dust, adhered printing plastics or any other material off the frame, guide rails, or wheels. Use glass cleaner or isopropyl alcohol to clean the print surface.
- Children under 10 years old should not use the printer without supervision.
- Do not manually move the extruder and printing platform while printing.
- Users should comply with the laws and regulations of the corresponding countries and regions where the equipment is located (used), abide by professional ethics, pay attention to safety obligations, and strictly prohibit the use of our products or equipment for any illegal purposes. Comgrow will not be responsible for any violators' legal liability under any circumstance.

Parameters

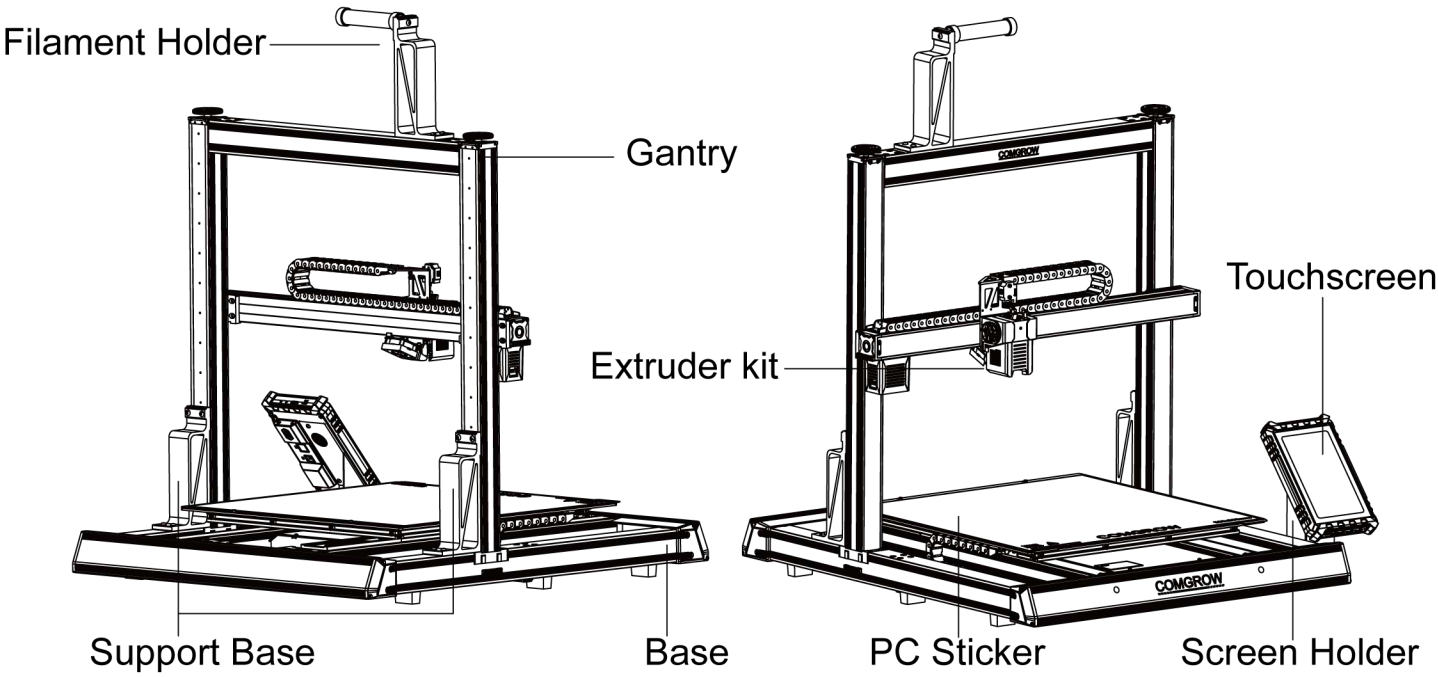

Model	T-500
Language	English
Print Method	USB flash drive, Wifi connection
Molding	FDM
Nozzle Quantity	1
Build Volume	500*500*500mm
Recommend Printing Speed	≤200mm/s
Printing Accuracy	±0.1mm
Nozzle Diameter	0.4mm(Replaceable)
Nozzle Temperature	≤300℃
Hotbed Temperature	≤80℃
Supporting Materials	PLA/PETG/TPU
Material Diameter	1.75mm
Support File Format	G-code
Voltage	Input:115/230V 50/60HZ Output:24V
Operation System	Windows/Linux/Mac
Power	MW 600W/24V

Package List

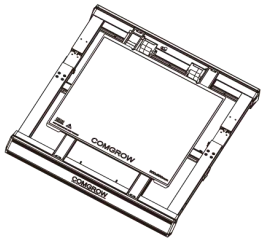

Base

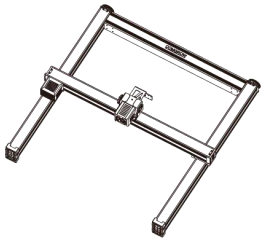
Gantry

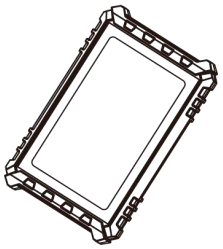
Screen

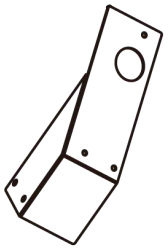
Screen holder

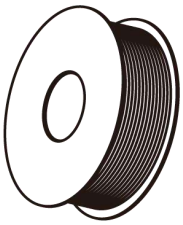
Filament

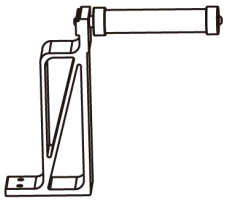
Filament Holder

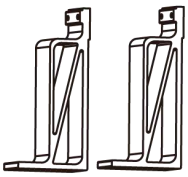
Support Base

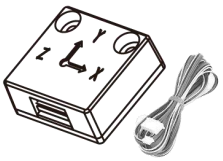

Accelerometer

Power Cable

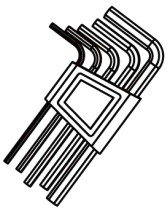
Allen Wrench

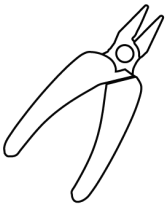
Diagonal Pliers

Slotted Screwdriver

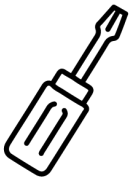
Phillips screwdriver

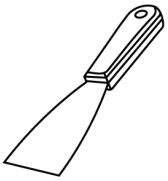
Spatula

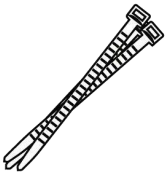
Zip Tie

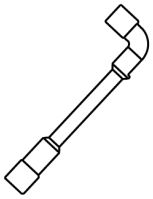
Socket Spanner

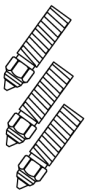
Spare Nozzle

Nozzle Cleaner Neddle

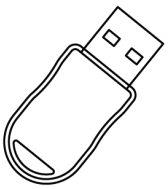
USB Flash Drive

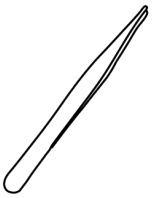
Tweezers

Cable clamp

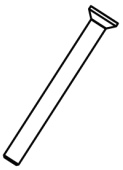
M3X30*2

M5X35*8

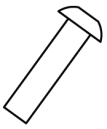
M5X10*2

M4X10*3

M3X6*4

M5X18*10

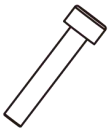
M3X16*2

Gantry

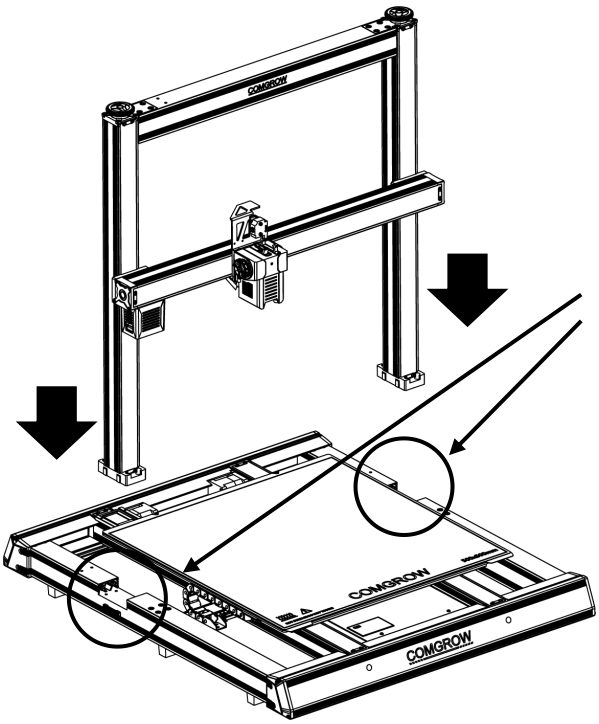

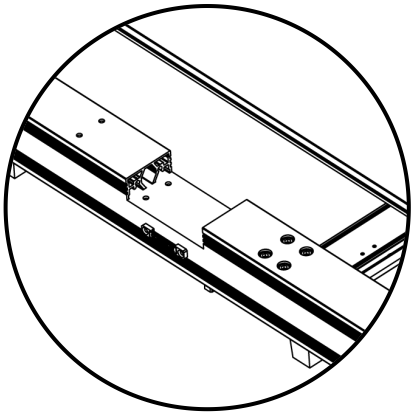

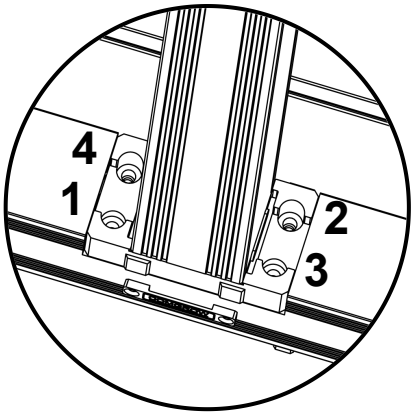

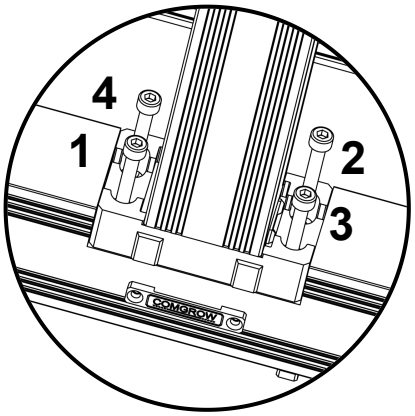

1. Install the gantry frame into the grooves on the left and right ends of the base. Use four **M5X35** screws to secure each side, totaling eight screws.

The extruder kit should face the front of the machine.

Note that the machine components are heavy.
Please place it on a stable platform before installation to prevent accidents and avoid causing harm to person and objects.

Support Base

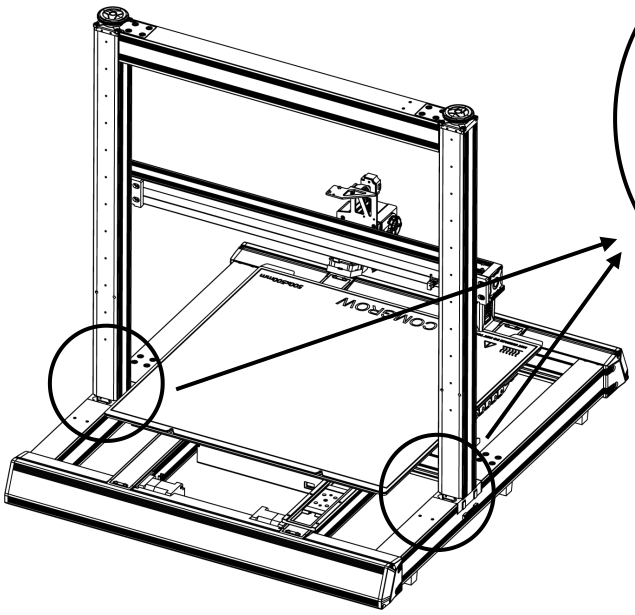

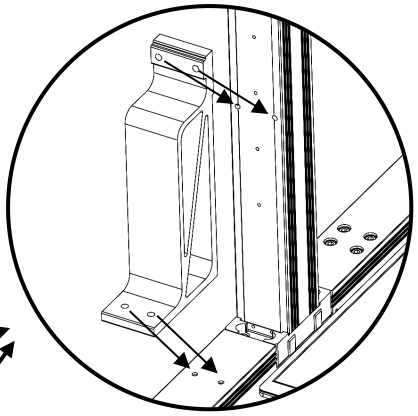

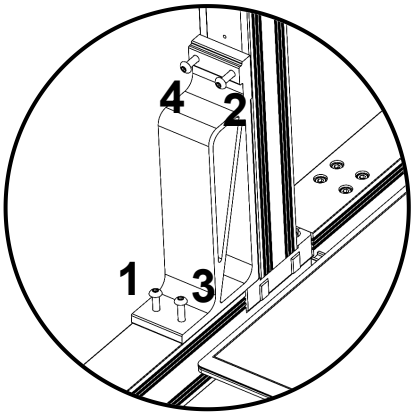

The support base is not left or right-specific.

1. Install the support base on the back of the machine, at the connection point between the gantry frame and the base. Use four **M5X18** screws on each side, totaling eight screws.

Cable Drag Chain

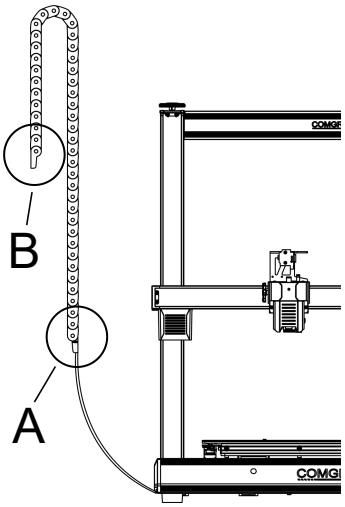

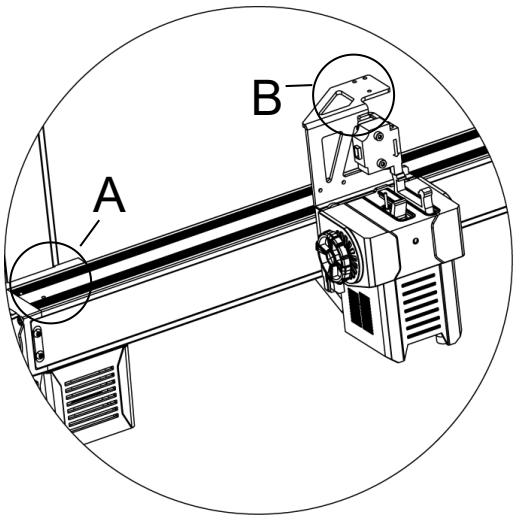

The following are the corresponding points for the installation position of the Cable drag chain.

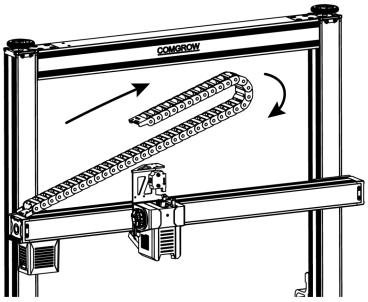

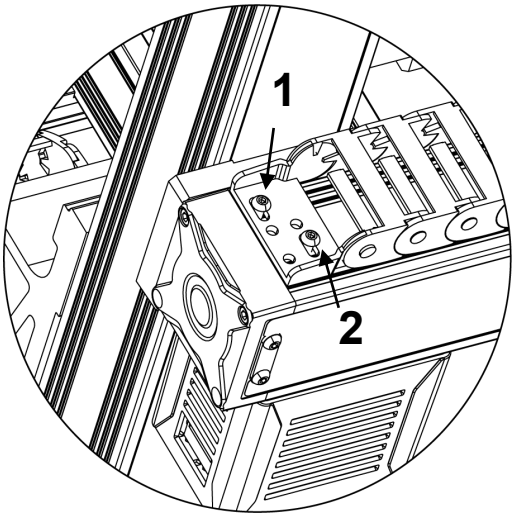

1. Lay the drag chain on the right as shown, use two **M3X6** screws to install the drag chain at the end A

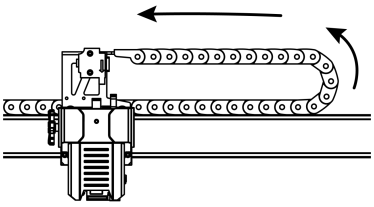

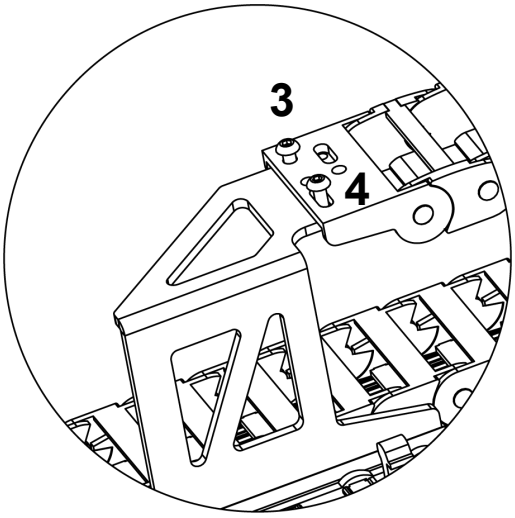

2. Bend the drag chain to the left as shown, use two **M3X6** screws to install the drag chain at the end B

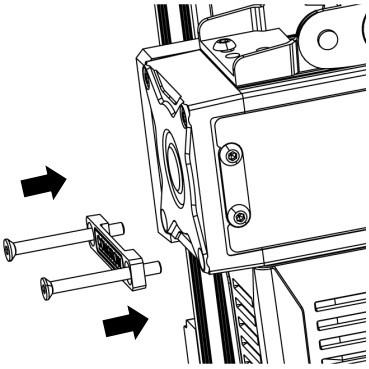

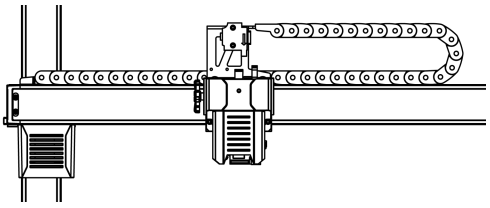

3. Use two **M3X30** screws to install the cable clamp, after installation it should be like the second picture

Touchscreen

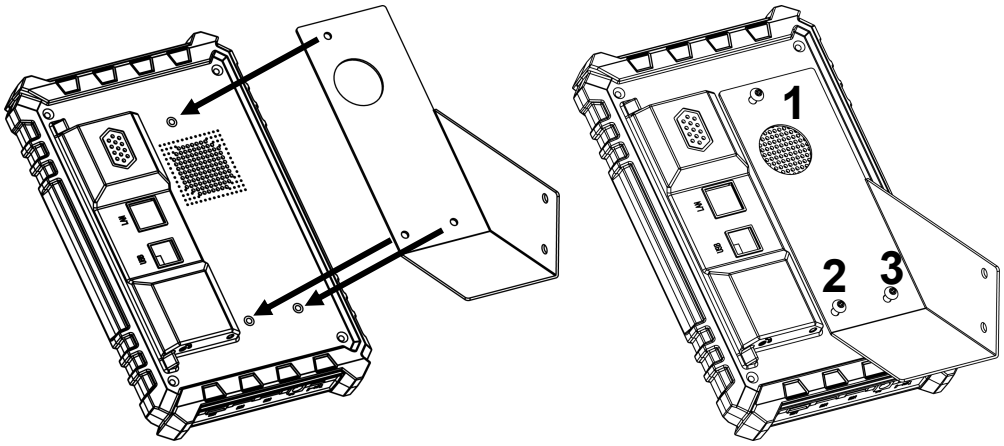

1.First, attach the touch screen mounting plate to the back of the touch screen, using three **M4X10** screws to secure it.

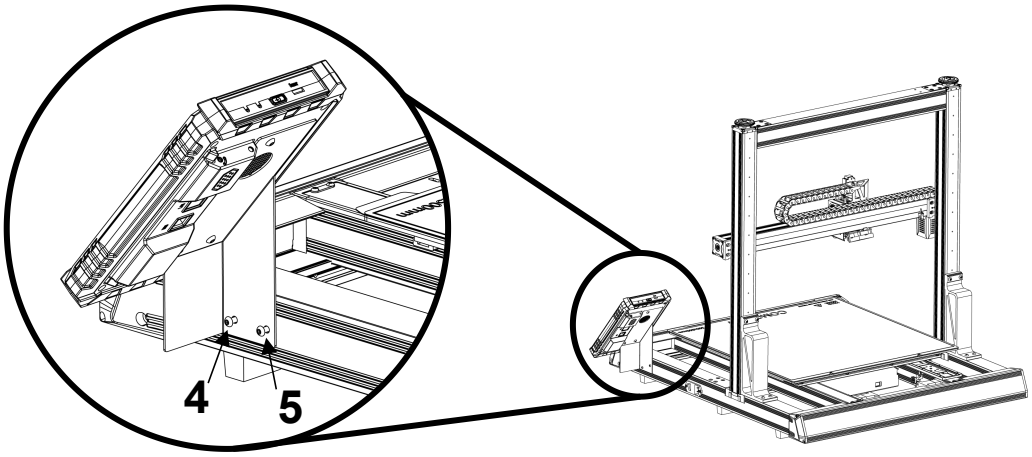

2.Then, install the entire touch screen assembly to the right front of the machine base, using the remaining two **M5X10** screws to secure it.

Filament Holder

1.Install the filament holder assembly onto the top of the machine's crossbeam, using two **M5X18** screws to secure it.

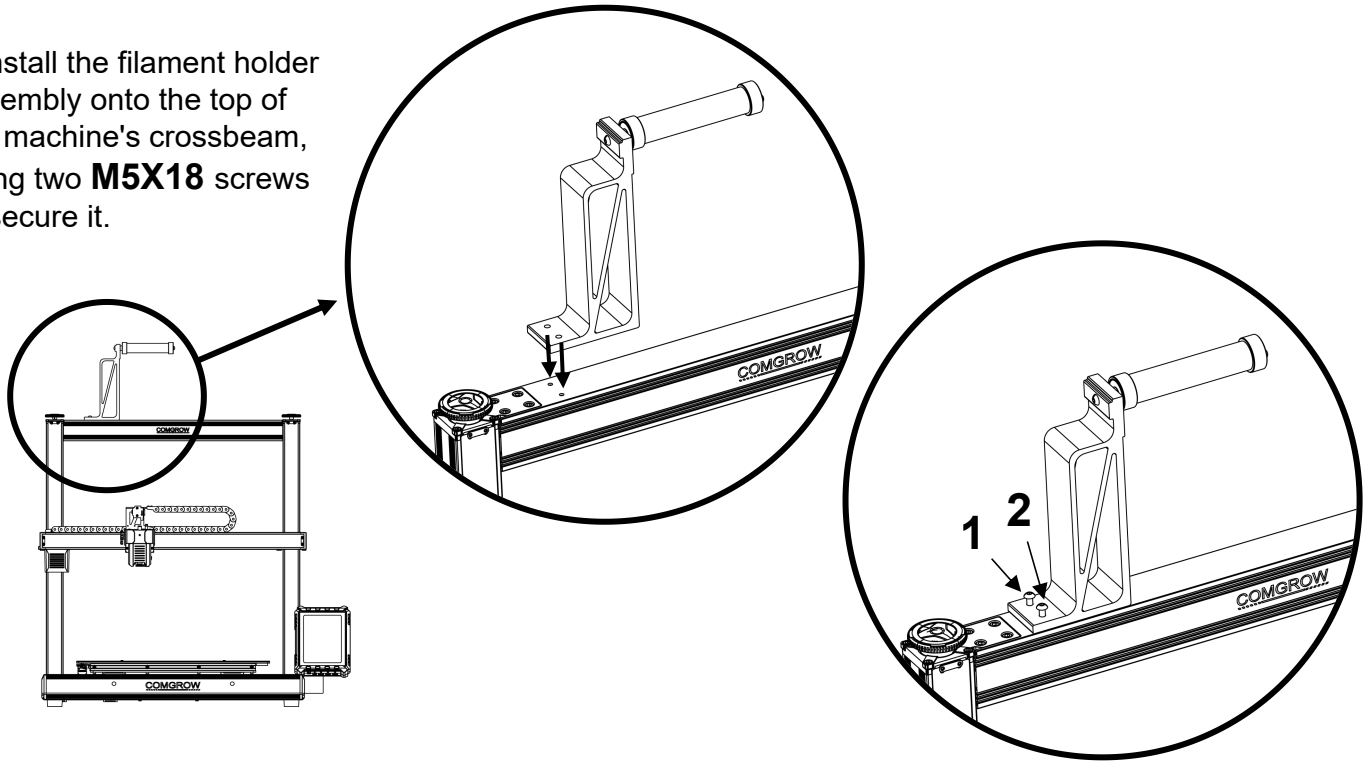

Connect Wires

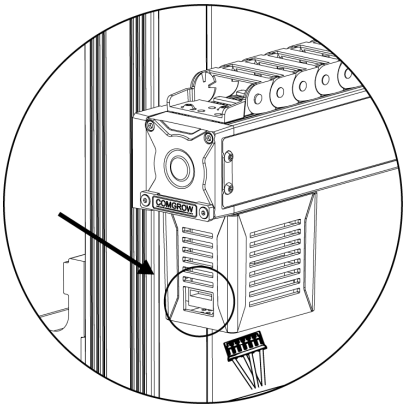

1. X Motor

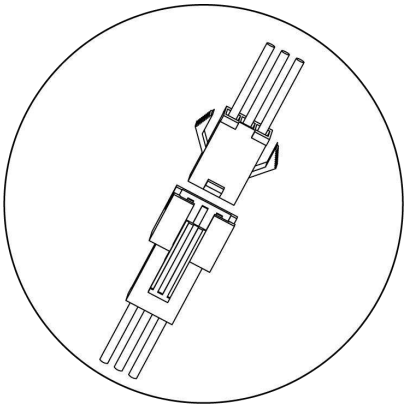

2. X Limit Switch

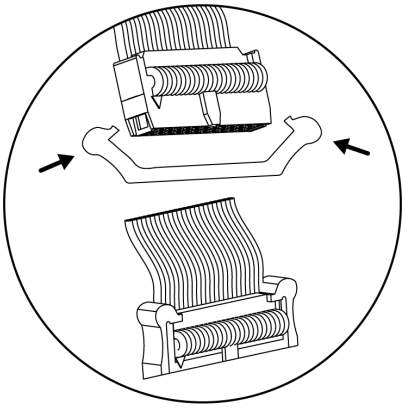

3. Extruder kit

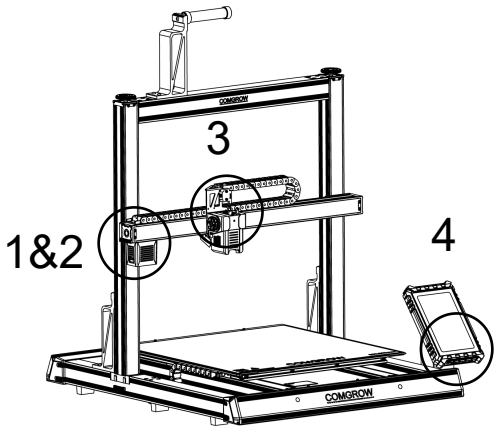

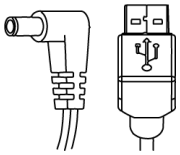

A B

4. Touchscreen

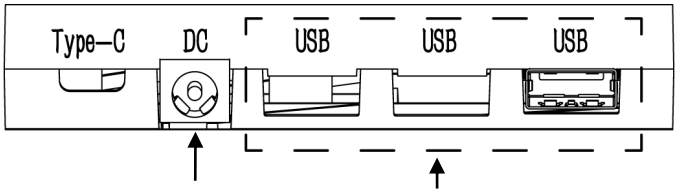

A B(Either of the three)

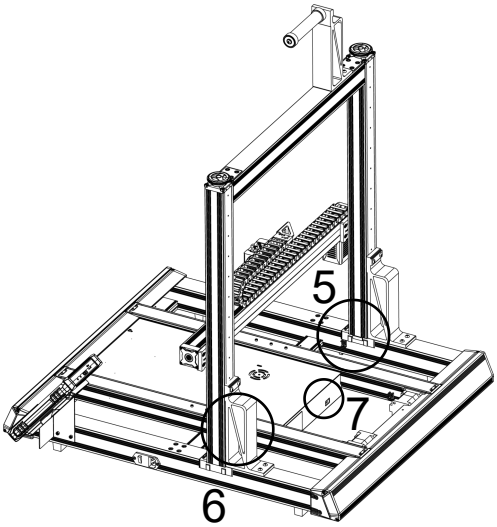

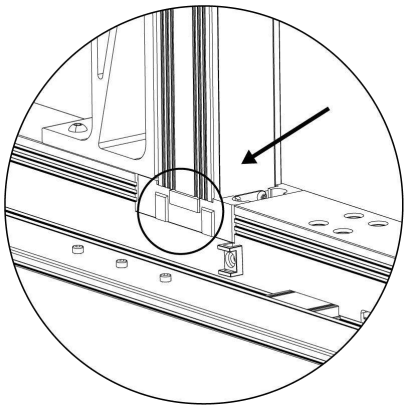

5. Z1 Motor

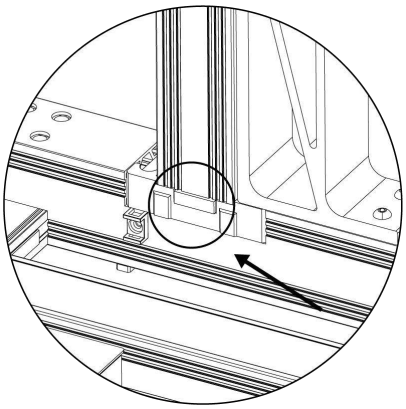

6. Z2 Motor

Please select the correct input voltage to match your local mains（230V or 115V).

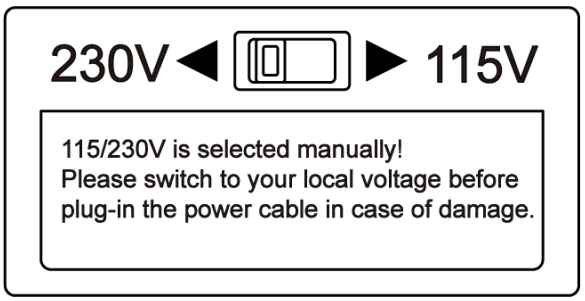

7. Power

Accelerometer

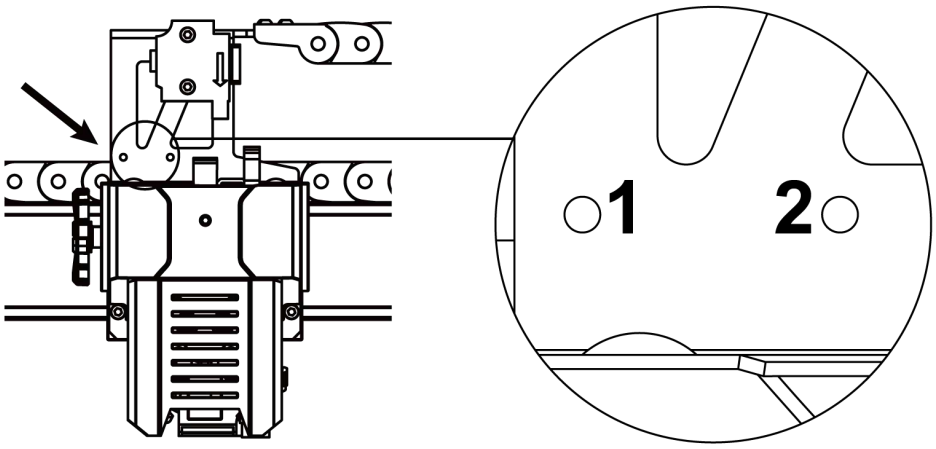

The accelerometer is an optional module, you can choose whether to install it according to your needs

1. Please pay attention to the two screw holes here on the nozzle
2. Mount the accelerometer here with two **M3X16** screws

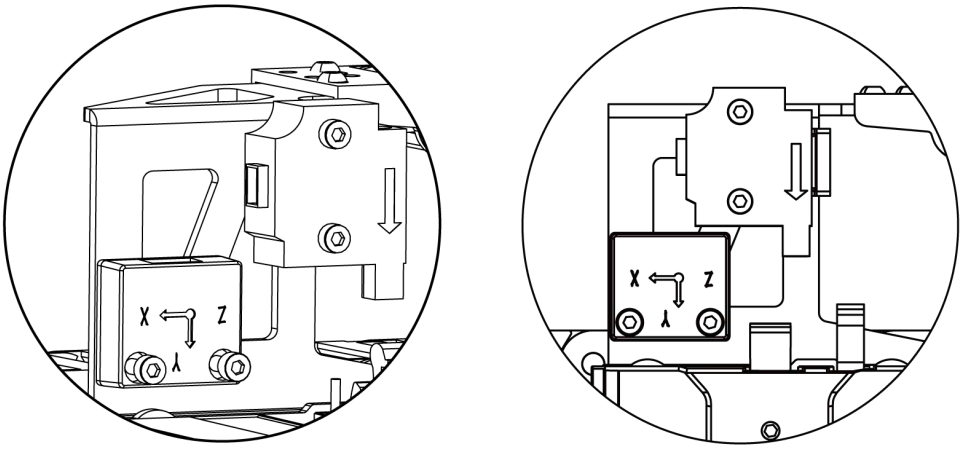

Please pay attention to the installing direction of the accelerometer in the figure, the interface should face the upper, do not install it reverse

X Axis

Y Axis

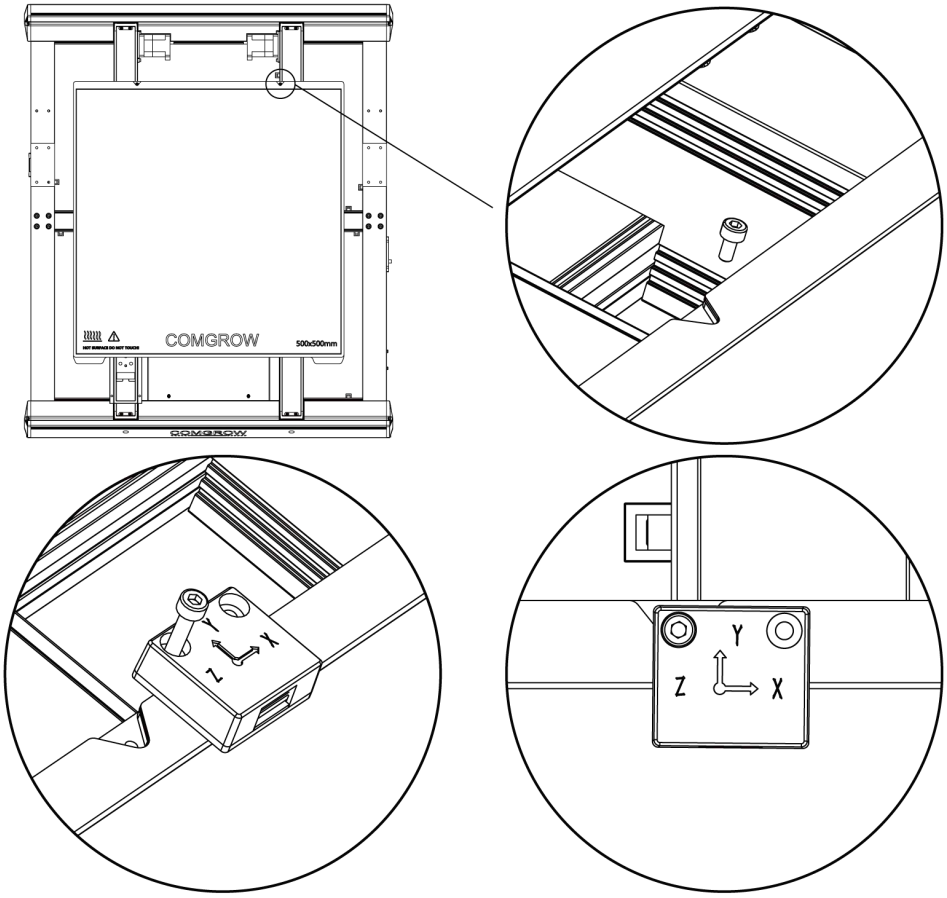

1. Unscrew one screw here on the hotbed
2. Mount the accelerometer using a **M3X16** screws as shown

Please pay attention to the installing direction of the accelerometer in the figure, the interface should face the front, do not install it reverse

Touchscreen

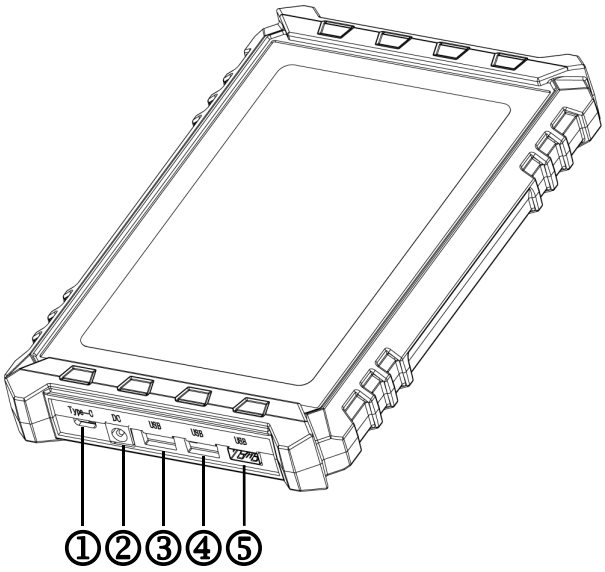

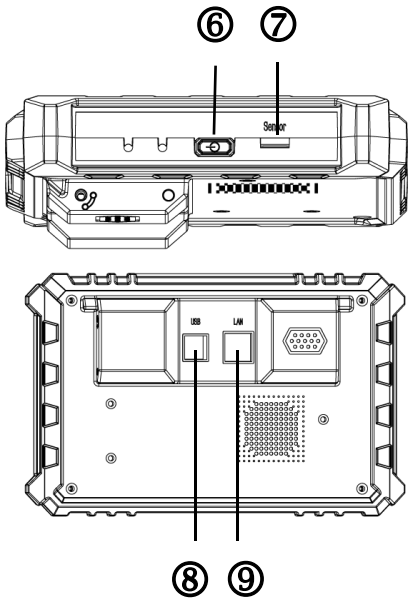

① Type-C ② DC 12~24V ③ USB2.0

④ USB2.0 ⑤ USB3.0 ⑥ Power

⑦ Accelerometer ⑧ USB2.0X2 ⑨ LAN

⑥ Power:

- Press the Power button for more than 5s at power on status, the klipper system will closed.
- Press the Power button for 1s at power off status, it will power on.

★ After closing the klipper system, the printing will be stopped,even though you didn't turn off the machine's power.

Main Menu

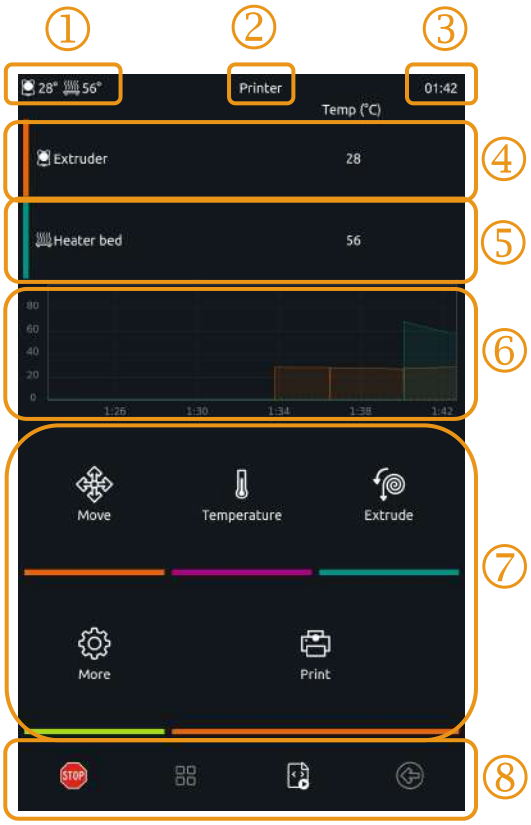

1. Nozzle, hot bed, Real-time temperature preview
2. Model|Current Menu
3. Time
4. Nozzle Temp: Click number to adjust nozzle temp
5. Hotbed Temp: Click number to adjust hotbed temp
6. Temperature curve: Click on the names of "Extruder" and "Heater Bed" above to turn on and off their temperature curves
7. Main menu: Please read the following introduction.
8. Bottom option

Emergency stop

Macros

Home

Back

Move

Move

X+: Move X axis to right
X-: Move X axis to left
Y+: Move Y axis forward
Y-: Move Y axis backward
Z+: Move Z axis up
Z-: Move Z axis down

1. Homing
2. Disable Motors
3. X/Y/Z axis's current coordinates
4. Settings
5. The distance per move

Homing

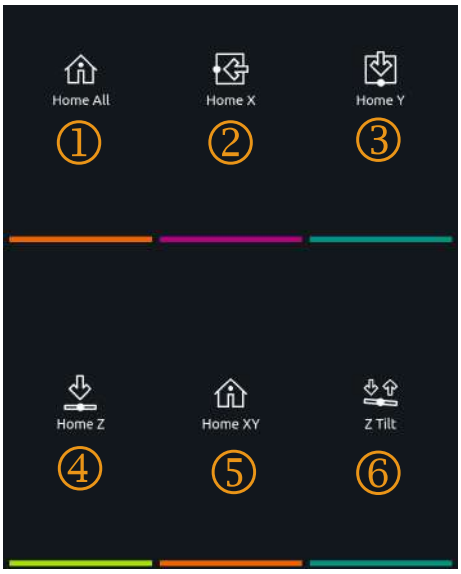

1. X/Y/Z axis all auto home
2. X axis auto home
3. Y axis auto home
4. Z axis auto home
5. X/Y axis auto home
6. Z tilt

Settings

1. Reverse the movement direction
2. Adjust the speed of moving X/Y axis
3. Adjust the speed of moving Z axis

Temperature

Temperature

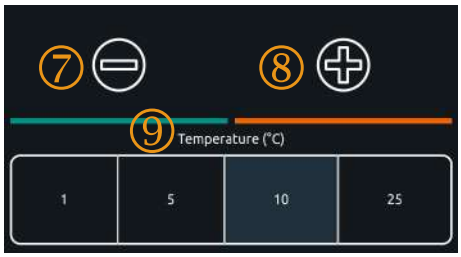

1. Cancel heating for all
2. Adjust temperature
3. Preheat PLA
4. Preheat ABS
5. Preheat PETG
6. Preheat FLEX
7. Reduce the temperature
8. Raise the temperature
9. Increase/decrease temperature per click

Extruder

Extrude

①

② ★ When temconnect to wifip is not enough, it is not allowed to have related operation about the extruder.

③

④

⑤

⑥

1. Nozzle real-time temperature，click*Temperature* to adjust temperature.
2. Extrude: extrude filament
   Retract: retract filament
3. Load: Execute a macro command to load filament.
   Unload: Execute a macro command to withdraw the filament
4. Distance: The extrusion distance/ retraction distance.
5. Speed: The extrusion speed/ retraction speed.
6. Filament Sensor On/Off

More

1. Bed Mesh: detect hotbed mesh flattening data.
2. Z Calibrate: adjust the Z-axis offset from the hotbed to the nozzle.
3. Limits: adjust the speed and acceleration of the printer.
4. Fan: control the switch and speed of the fan.
5. Macros: check out the macro command.
6. Led: control the on and off of the nozzle LED
7. Console: open console to check out or input the command
8. System: update, restore factory, restart, shutdown
9. Input Shaper: adjust the vibration compensation of the XY axis
10. Save Config: save current configuration
11. KlipperScreen: screen settings
12. Network: connect to wifi

★ For more details, see the follow-up content

Bed Mesh

Bed Mesh

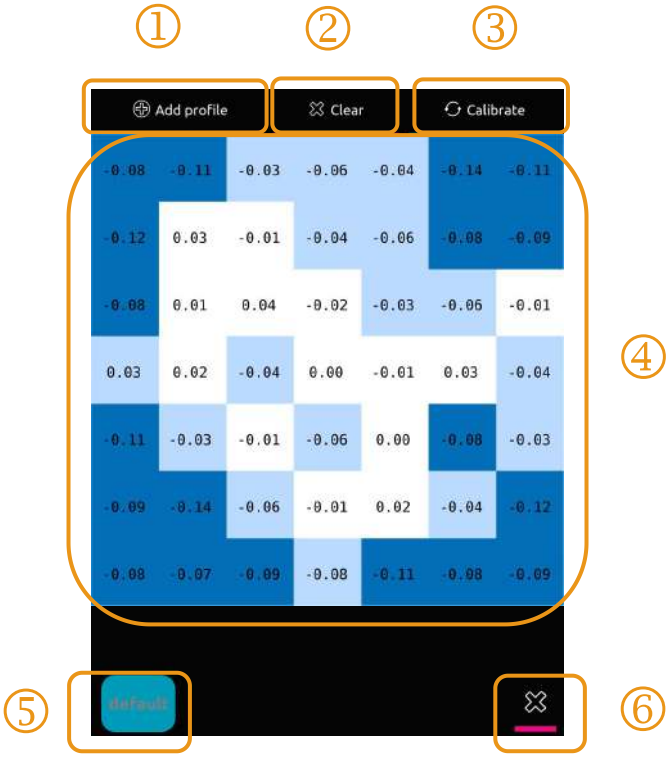

1. Add profile
2. Clear the saved leveling data in current profile
3. Start calibrate
4. Leveling data preview
5. Current profile name
6. Delete current profile

Z Calibrate

Z Calibrate

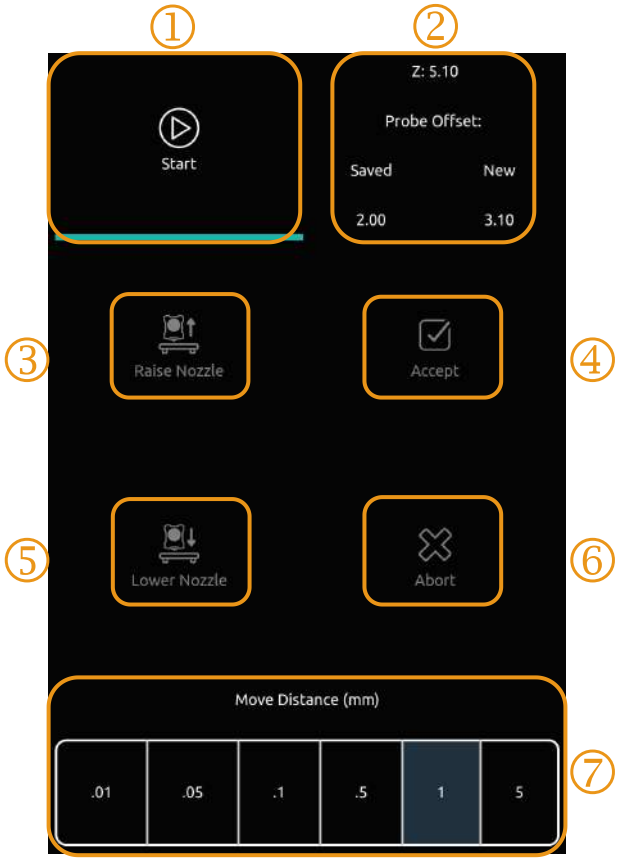

1. Start Z calibrate
2. The value of Z calibrate
3. Raise nozzle according to the setted height
4. Apply the settings (Saving settings requires a system restart)
5. Lower nozzle according to the setted height
6. Abort Z calibrate
7. Set the distance of per move

Limits

Limits

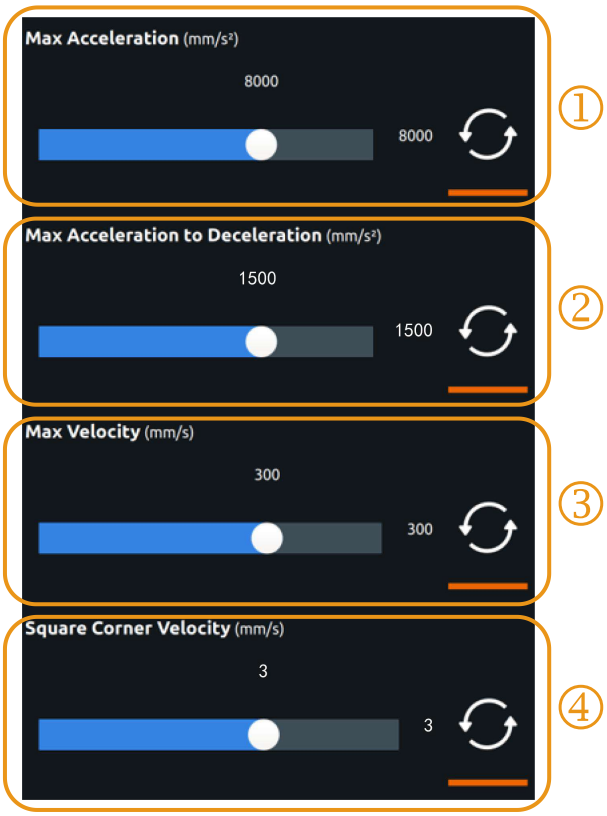

1. Max Acceleration
2. Max Deceleration
3. Max Speed
4. Square Corner Velocity

★ Click the number on the right side of the value bar to enter the value manually

★ We have adjusted to the best settings for you out of the factory,
if you do not know these parameters very well, please do not change the parameters arbitrarily, in case cause the printing failure.

Fan, Macros

Fan

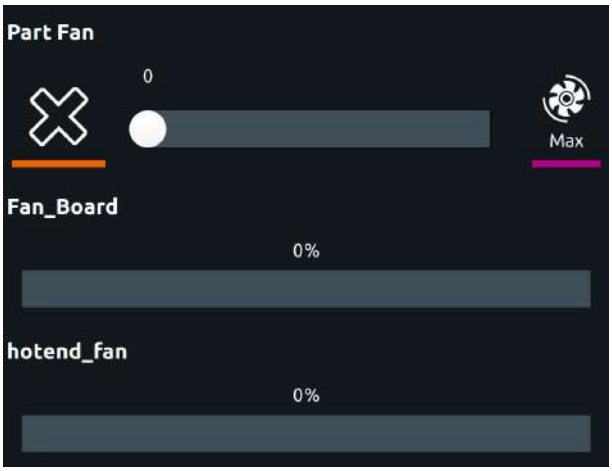

Part Fan: can be controlled manually
The Fan_Board and hotend_fan are uncontrollable, and will be turned on automatically when the hotend starts to heat up

Macros

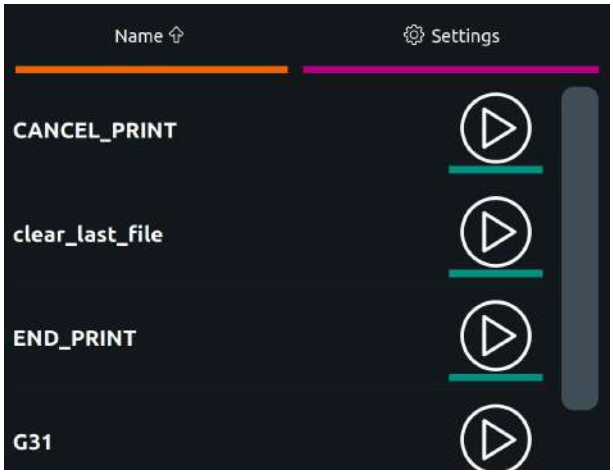

You can view or test and run the macro command

Led, Console

Led

Control the on and off of the nozzle LED

Console

Open console to check out or input the command

Save config, KlipperScreen

Save config

Save the current configuration, the system will restart.

Settings

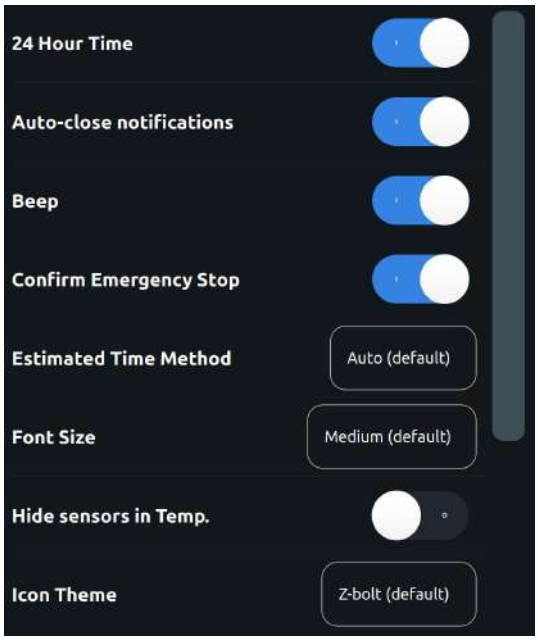

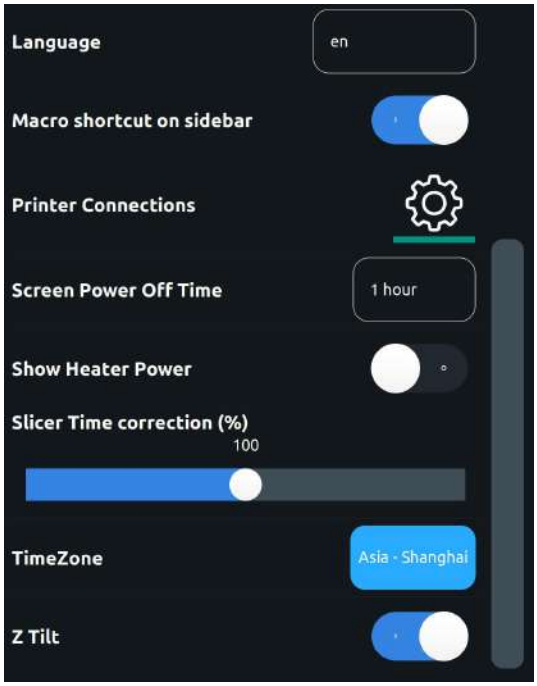

Network

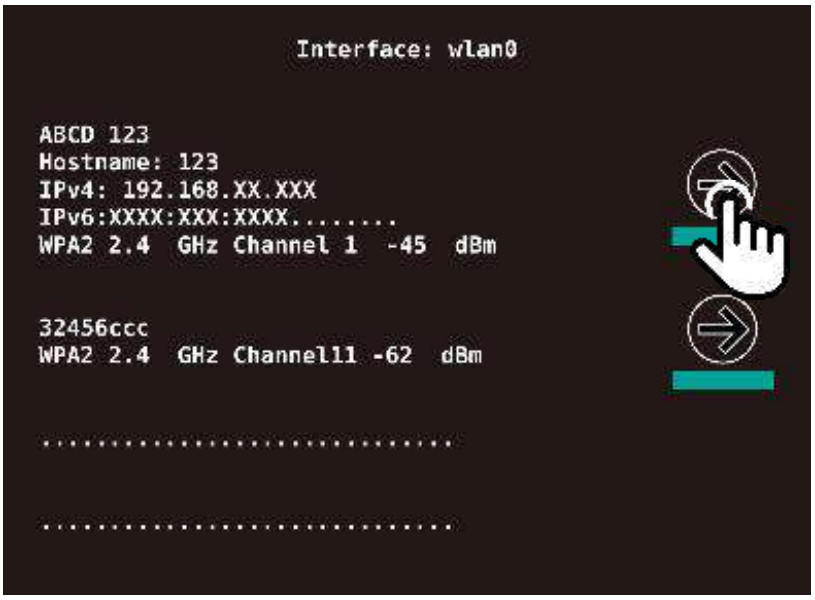

1. Choose a Wifi connection

2. After entering the password, click *save* on the top right, not *☑*on the right bottom.

3. When there shows “Connection”or after click *close* on the right bottom and back to wifi interface, it shows “(connected)” after that wifi name, it means that is connecting successfully.

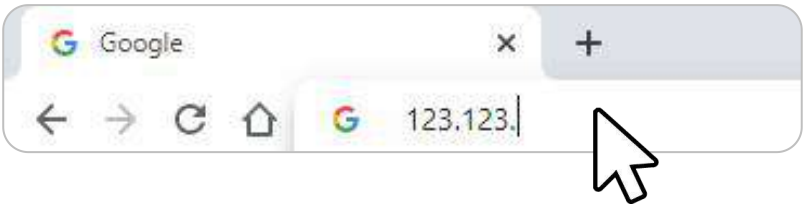

4. After connecting to Wifi, Check the IP address of this machine, Enter this IP address in the website address column of the brower to enter the printing page.

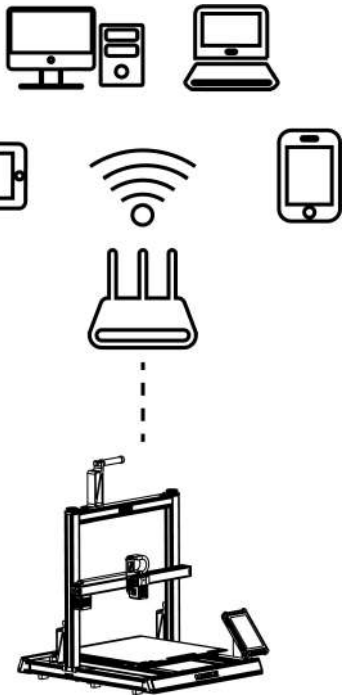

★The network PC/mobile /tablet needs to be under the same router as the network of printer, so that they are able to connected remotely.

Bed Leveling

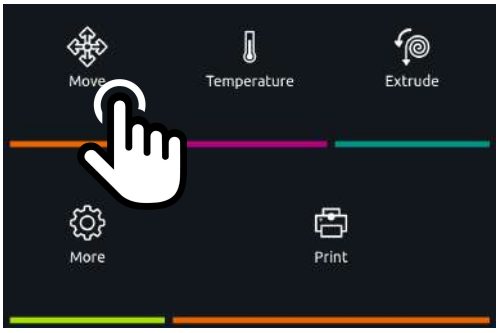

1. Click *Move* on the home page.

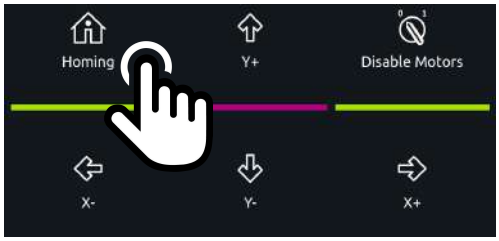

2. Click *Homing*

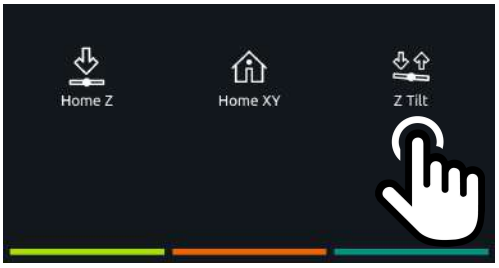

3. Click * Z Tilt*. The machine will detect the left and right sides of the hot bed, and automatically calibrate the level of the X-axis beam

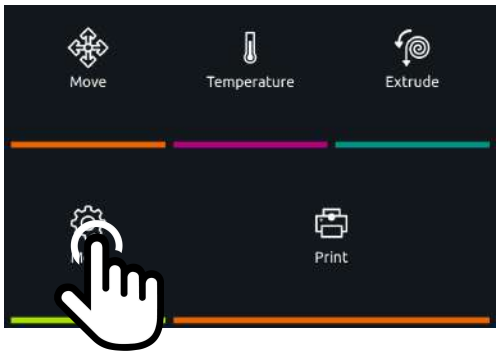

4. After machine calibration stops,Click *More* on the home page.

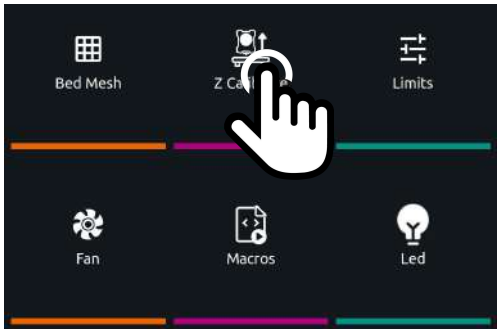

5. Click * Z calibrate*.

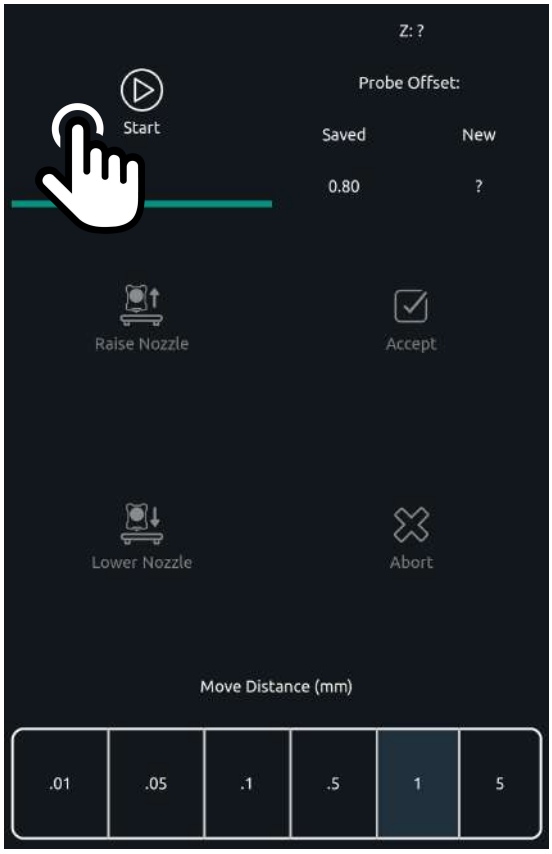

★ Please do not move a large distance at one time to avoid the nozzle hitting the hotbed.

6. Click *start*, the printer will auto home first.
7. After the printer auto home, the nozzle will slowly move to the center of the bed,put a piece of A4 paper between the nozzle and the hotbed.
8. Select the suitable move distance then click *raise nozzle * or * lower nozzle *, to adjust the distance between the nozzle and the hotbed.
9. Adjust the distance between the nozzle and the hotbed (please keep pulling the paper during the period, when you feel resistance to pulling the paper and the nozzle does not completely press the paper, the distance is appropriate.
10. Click *accept* to apply the values, then confirm and restart the system.

Bed Leveling

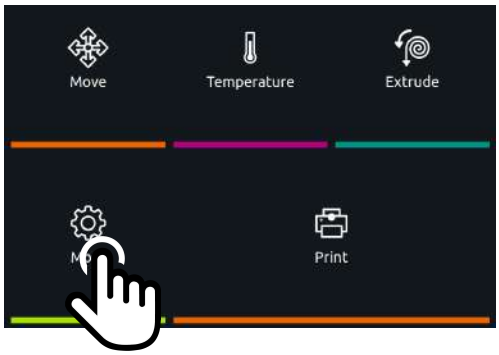

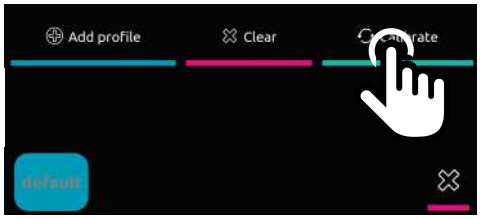

11. Click * More* on home page.

12. Click *Bed Mesh*, then click *Calibrate* after the detection is complete, restart the system, Leveling complete.

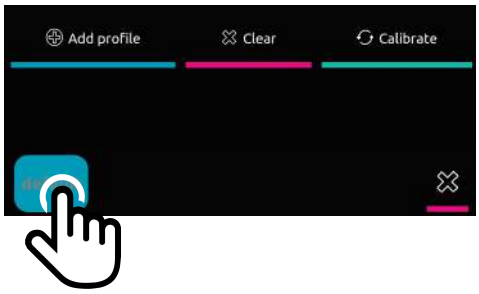

★ If you want to view the bed mesh data later, please return to this interface and click the current configuration name "default“ to view

★ It is recommended that you fine-tune the Z offset value again according to the actual situation when printing

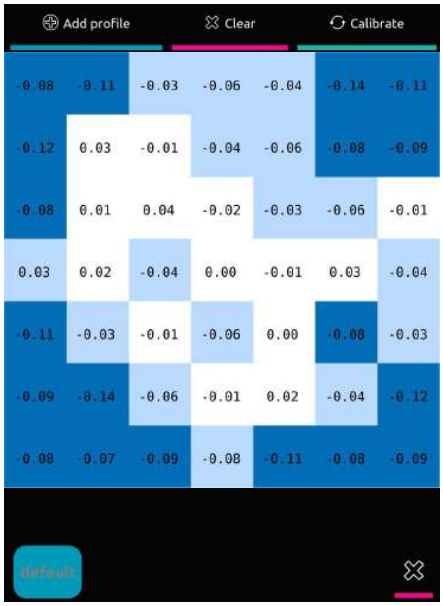

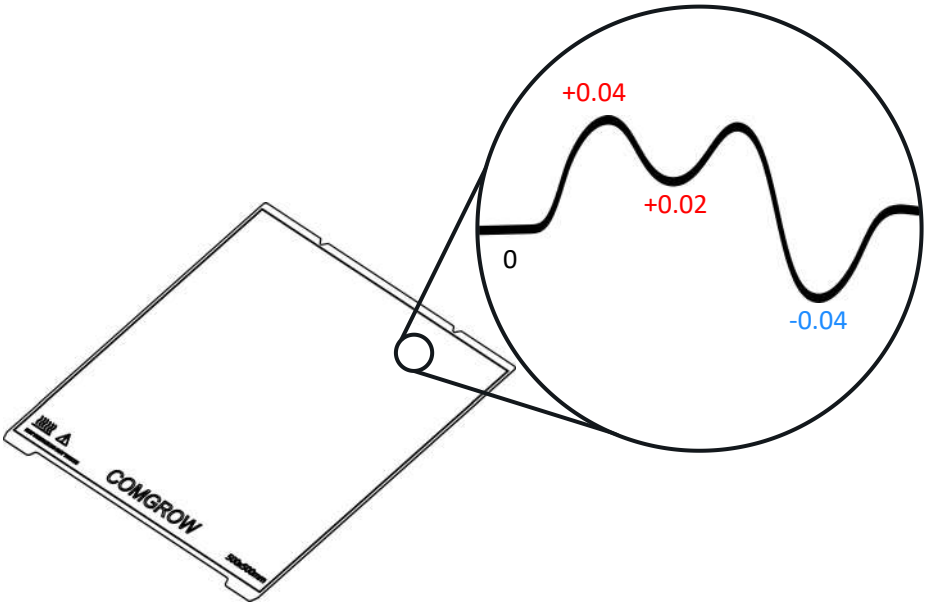

The bed mesh data reflects the concave and convex of the hotbed. The detection data divides the hotbed into 25 small areas to detect the concave and convex. When 0 means flat, the positive value means relatively high, and the negative value means equivalent low. Which can reflect the levele of the hot bed, The subsequent printer will adjust the offset value between the nozzle and the hot bed based on these data to compensate

Change Configuration

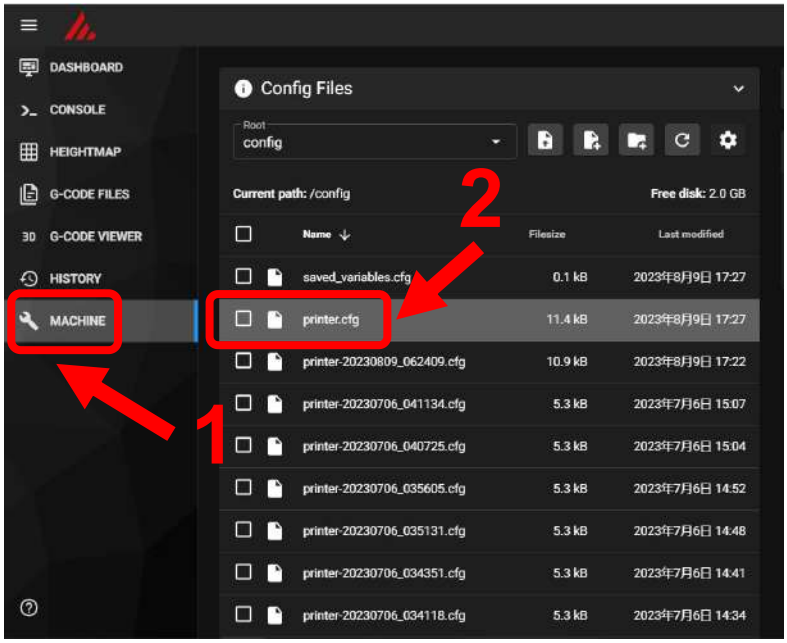

1. If you want to change the printer configuration, after entering the web page by IP, click the “configuration” option on the left menu bar
2. Click the "Printer.cfg" file (the one without the date) to configure
3. After the configuration is complete, click the "SAVE & RESTART" option in the upper right corner (the klipper system will restart)

Load/unload filament

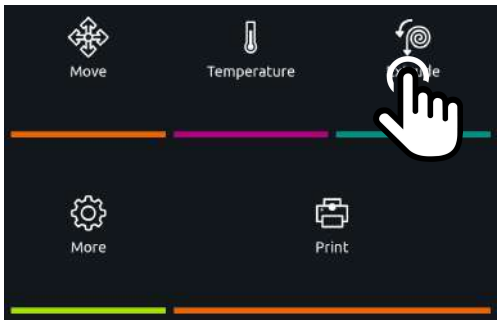

1. Click *Extrude* on the home page.

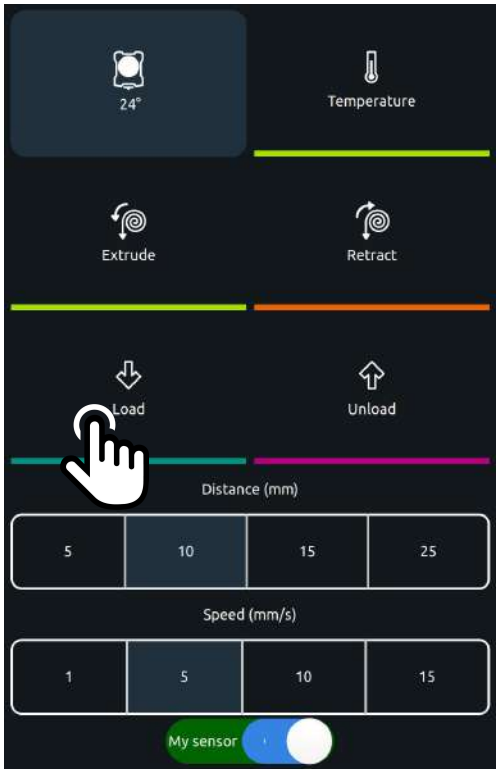

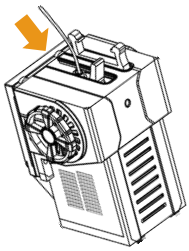

3. Then insert the filament in to the extruder, click * load*, the extruder will load the filament automatically, if you need custom adjustment. click * Extrude* , *Retract* , *Distance* or * Speed* to adjust.

★ Each machine has been tested before leaving the factory, and it is normal to have residual filament in the nozzle.

★ When the nozzle temp is so low, it is not allowed to have related operation about the extruder. Please pre-heat nozzle first.

Print

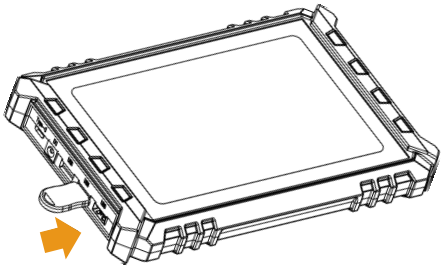

1. You can remotely upload files on the web page and print, or directly insert a U disk into the USB port on the display to print.

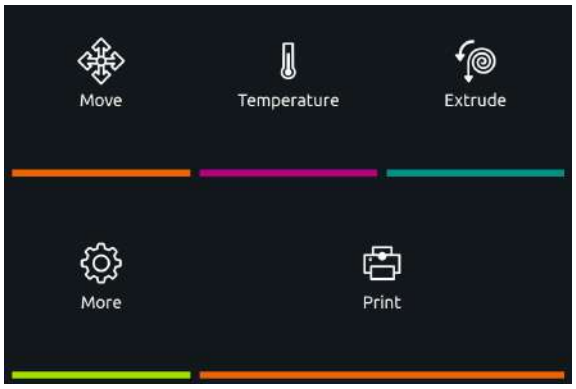

2. Click "Print" on the main interface.

3. Click the print icon or the STL thumbnail to print.

When this icon appears, it means it is a folder.

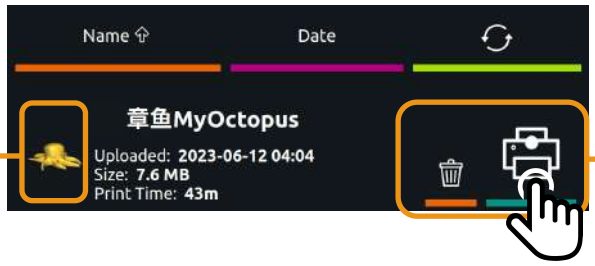

Mainboard

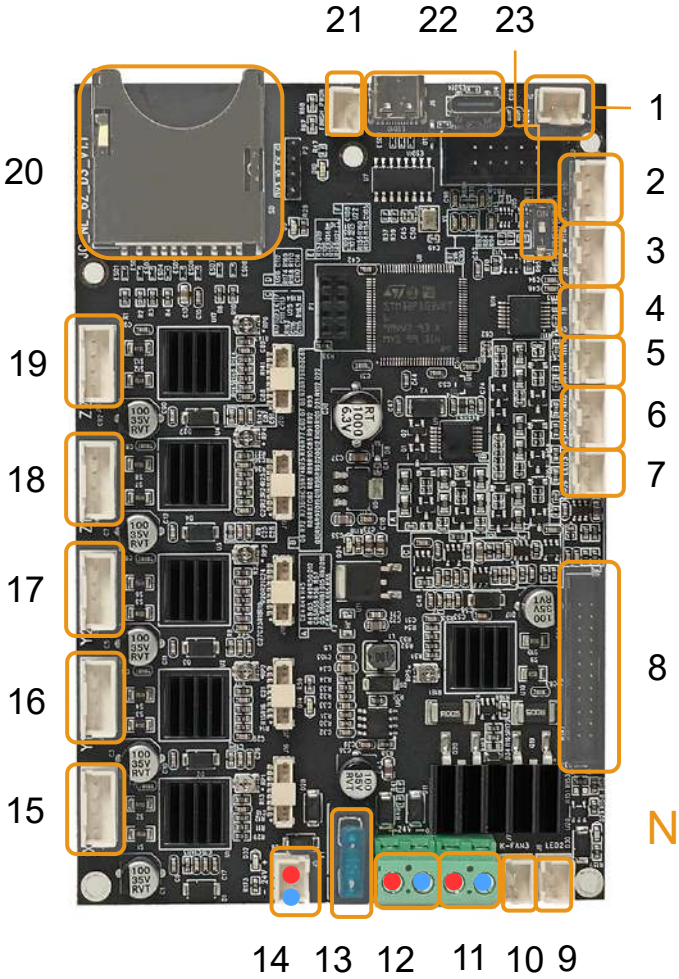

● + Positive ● - Negative

1: Z Limit 2:Y Limit 3: X Limit
4: Hotbed thermistor 5: Chamber thermistor
6: Filamnet runout sensor 7: LED
8: Extruder kit cable 9: LED
10: K-Fan 11: Hotbed Power
12:Power(24V) 13: Fuse
14: Screen Power(24V) 15: X Motor
16: Y1 Motor 17: Y2 Motor 18: Z1 Motor
19: Z2 Motor 20: SD card 21: Shutdown module
22: Type-C 23: No Limit/Limit Switch

NOTE: 5,7,9,21 are reserved ports, and they are not connected to any parts out of factory.

comgrow facebook group

comgrow.com

SHENZHEN Comgrow Technology CO.,LTD.

Official website： comgrow.com

Email： service@comgrow.com

FCC Statement

This equipment has been tested and found to comply with the limits for a Class B digital device, pursuant to part 15 of the FCC Rules. These limits are designed to provide reasonable protection against harmful interference in a residential installation. This equipment generates, uses and can radiate radio frequency energy and, if not installed and used in accordance with the instructions, may cause harmful interference to radio communications. However, there is no guarantee that interference will not occur in a particular installation. If this equipment does cause harmful interference to radio or television reception, which can be determined by turning the equipment off and on, the user is encouraged to try to correct the interference by one or more of the following measures:

•Reorient or relocate the receiving antenna.

•Increase the separation between the equipment and receiver.

•Connect the equipment into an outlet on a circuit different from that to which the receiver is connected.

•Consult the dealer or an experienced radio/TV technician for help.

Caution: Any changes or modifications to this device not explicitly approved by manufacturer could void your authority to operate this equipment.

This device complies with part 15 of the FCC Rules. Operation is subject to the following two conditions: (1) This device may not cause harmful interference, and (2) this device must accept any interference received, including interference that may cause undesired operation.

RF Exposure Information

This equipment complies with FCC radiation exposure limits set forth for an uncontrolled environment. This equipment should be installed and operated with minimum distance 20cm between the radiator and your body.