Combi table lamp

Assembly Instructions

For video instructions, or instructions in other languages, please scan the QR code, or visit www.https://koncept.com/Combi-Table

1

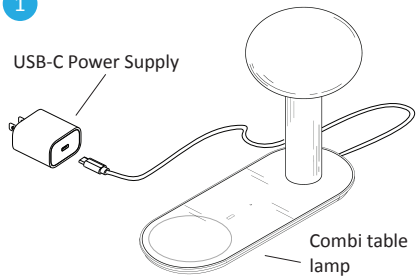

2

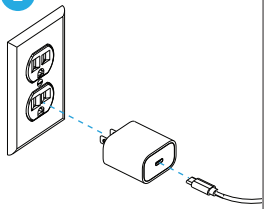

Connect the lamp's USB-C cable to the power supply, then plug it into the wall outlet.

3

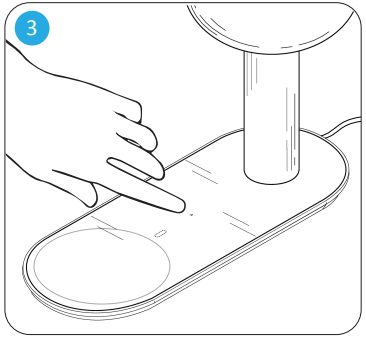

Touch the glowing touch control to turn on & off, hold it to dim / brighten the light.

4

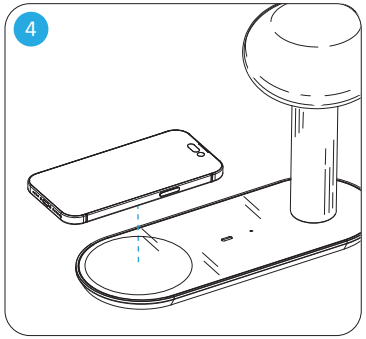

Place any smart device that supports the Qi wireless charging standard onto the ring to charge wirelessly.

5

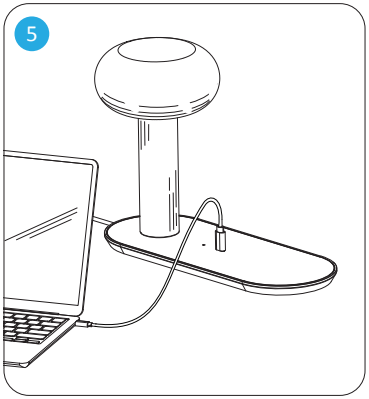

Connect a USB-C device to the lamp's USB-C port for high-power charging (up to 45 watts)

6 Bolt Down*

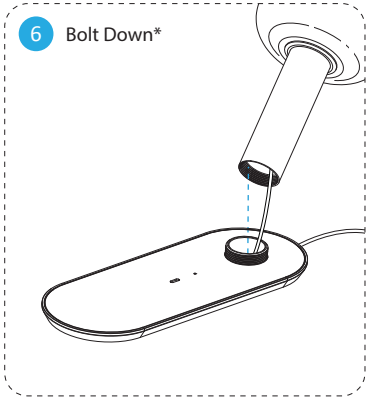

[*Optional step] To bolt down the Combi onto a tabletop, slowly unscrew the vertical stem from the body.

7 Bolt Down*

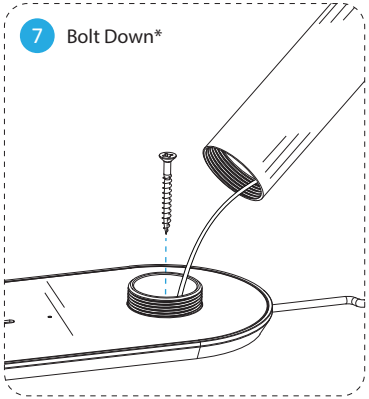

[*Optional step] Then, carefully insert a screw through the hole to secure the Combi lamp onto the tabletop.

8 Bolt Down*

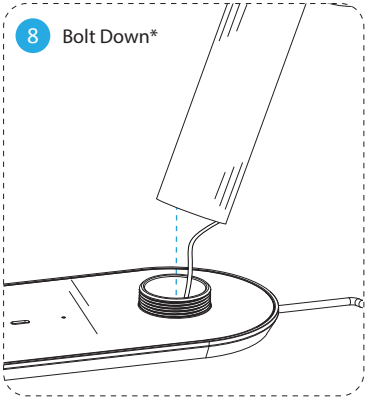

[*Optional step] Lastly, screw the vertical stem back onto the body.

FCC Statement

This device complies with Part 15 of the FCC Rules. Operation is subject to the following two conditions:

(1) This device may not cause harmful interference.

(2) This device must accept any interference received, including interference that may cause undesired operation.

2. Changes or modifications not expressly approved by the party responsible for compliance could void the user's authority to operate the equipment.

Note: This equipment has been tested and found to comply with the limits for a class B digital device, pursuant to Part 15 of the FCC Rules. These limits are designed to provide reasonable protection against harmful interference in a residential installation.

This equipment generates uses and can radiate radio frequence energy and,if not installed and used in accordance with the instructions, may cause harmful interference to radio communications. However, there is no guarantee that interference will not occur in a particular installation. If this equipmemt does cause harmful interference to radio or television reception,which can be determined by turning the equipment off and on,the user is encouraged to try to correct the interference by one or more of the following measures:

• Reorient or relocate the receiving antenna.

• Increase the separation between the equipment and receiver.

• Connect the equipment into an autlet on a circuit different from that to which the receiver is connected.

• Consult the dealer or an experienced radio/TV technician for help.

The device has been evaluated to meet general RF exposure requirement,This equipment should be installed and operated with a minumum distance of 20 cm between the radiator and your body.

Koncept Inc. | 429 E Huntington Dr, Monrovia, CA 91016 | www.koncept.com

Warnings

EN **Do not use an external dimmer. Doing so may cause damage to the product. Do not use outdoors.**

DE **Verwenden Sie keinen externen Dimmer. Andernfalls kann das Produkt beschädigt werden. Nicht im Freien verwenden.**

FR **N'utilisez pas de gradateur externe. Sinon, le produit pourrait être endommagé. Ne pas utiliser à l'extérieur.**

ES **No utilice un atenuador externo. De lo contrario, el producto podría dañarse. No lo use al aire libre.**

IT **Non utilizzare un dimmer esterno. In caso contrario, il prodotto potrebbe essere danneggiato. Non usarlo all'aperto.**

DK **Brug ikke en ekstern lysdæmper. Ellers kan produktet blive beskadiget. Brug den ikke udendørs.**

Specifications

Model	CMT-S-QCB-MTB
Light Color	Soft White
Color Temperature	2700 K
Brightness Adjustability	Continuous

Koncept Inc.
429 E. Huntington Drive
Monrovia, CA 91016, USA
Phone: 323-261-8999
Fax: 323-261-8998

Customer Support:
support@koncept.com

Web Address:
www.koncept.com