Ke Mei Ou Lab Corp.

www.kmolab.com

FCC ID TEST REPORT

Under:
FCC 15 Subpart E, Paragraph 15.407
Operation within the band
☒5.15-5.25 GHz and 5.725-5.85 GHz
☒NII-Unlicensed National Information Infrastructure TX ☒Single-modular

Prepared for:

AiWave Technologies

ul. Niska 3, 27-200 Starachowice Poland

FCC ID: 2BCCA-6235ZRRB

EUT: RTL8735 Module

Model: 6235Z-RRB

December 15, 2023
Issue Date:

Original Report
Report Type:

Prepared by: Jason Xiong / Engineer

Reviewed & Approved by: Apollo Liu / Manager

©2023 Ke Mei Ou Laboratory Co., Ltd.

The test report consists 31 pages in total. It may be duplicated completely for legal use with the allowance of the applicant. It shall not be reproduced except in full, without the written approval of Ke Mei Ou Laboratory Corporation. The test result in the report only applied to the tested sample.

Table of Contents

1. General Information **4**
1. 1 Notes 4
1. 2 Testing Laboratory 4
1. 3 Details of Applicant 4
1. 41. 4 Application Details 4
1. 5 Details of Manufacturer 4
1. 6 Test Item 4
1. 7 Applicable Standards 7
2. Technical Test **8**
2. 1 Summary of Test Results 8
2. 2 Antenna Requirement 8
2. 3 Measurement Uncertainty 8
2. 4 Test Configuration 9
3. EUT Modifications **13**
4. Conducted Power Line Test **14**
4. 1 Test Equipment 14
4. 2 Test Procedure 14
4. 3 Test Setup 14
4. 4 Configuration of the EUT 15
4. 5 EUT Operating Condition 15
4. 6 Conducted Power Line Emission Limits 15
4. 7 Conducted Power Line Test Result 16
5. FCC Part 15.407 Requirements for 802.11a/n/ac/ax Systems **17**
5. 1 Test Equipment 17
5. 2 Test Procedure 17
5. 3 Test Setup 19
5. 4 Configuration of the EUT 19
5. 5 EUT Operating Condition 19
5. 6 Limit 20
5. 7 Test Result 21
6. Radiated Emission Radiated Emission at 3 Meters **22**
6. 1 Test Equipment 22
6. 2 Test Procedure 22
6. 3 Radiated Test Setup 24
6. 4 Configuration of the EUT 26
6. 5 EUT Operating Condition 26
6. 6 Radiated Emission Limit 26
6. 7 Radiated Emission Test Result 27
7. Photographs - Test Setup **28**
8. Photographs - EUT **29**
9. Label **30**
10. Test Equipment **31**

Report Revision History

Report #	Version	Description	Issued Date
KSZ2023053101J03	Rev.01	Initial issue of report	September 27, 2023
KSZ2023053101J03	Rev.02	Update section 1.6 & section 2.1~2.4 & section 5 of report	December 15, 2023

1. General Information

1. 1 Notes

The test results of this report relate exclusively to the test item specified in 1.6. The Ke Mei Ou Laboratory does not assume responsibility for any conclusions and generalizations drawn from the test results with regard to other specimens or samples of the type of the equipment represented by the test item. The test report may only be reproduced or published in full. Reproduction or publication of extracts from the report requires the prior written approval of the Ke Mei Ou Laboratory.

1. 2 Testing Laboratory

Test Firm Name:	**Ke Mei Ou Lab Co., Ltd.**
Test Firm Address:	2013-2016, 20th Floor, Business Center, Jiahui Xin Cheng, No 3027, Shen Nan Road, Fu Tian, Shen Zhen, Guang Dong, P. R. China
FCC Designation Number:	CN1532
Test Firm Registration Number:	344480
Internet:	www.kmolab.com
Email:	kmo@kmolab.com
ANSI-ASQ National Accreditation Board/ACLASS ISO/IEC 17025 Accredited Lab for telecommunication standards. The Registration Number is AT-1532. The testing quality system meets with ISO/IEC-17025 requirements, This approval results is accepted by MRA of ILAC.	

1. 3 Details of Applicant

Name	**AiWave Technologies**
Address	**ul. Niska 3, 27-200 Starachowice Poland**

1. 41. 4 Application Details

Date of Receipt of Application	: May 31, 2023
Date of Receipt of Test Item	: July 28, 2023
Date of Test	: July 28, 2023 ~ December 14, 2023

1. 5 Details of Manufacturer

Name	**AiWave Technologies**
Address	**ul. Niska 3, 27-200 Starachowice Poland**

1. 6 Test Item

EUT Feature	
EUT Description:	RTL8735 Module
Brand Name:	FN-LINK
Basic Mode:	6235Z-RRB
Family Model:	-
HW Version:	-
SW Version:	-
EUT RF Technology:	☒IEEE Std. 802.11a/n
Equipment Class:	☒NII-Unlicensed National Information Infrastructure TX ☒Single-modular
EUT Stage:	☒Identical Prototype
Note:	The above EUT's information was declared by manufacturer. Please refer to the specifications or user's manual for more detailed description.

Additional Information

Standard Product Specification		
Tx/Rx Frequency Range	☒ 5150~5250 MHz	☐ 5250~5350 MHz
	☐ 5470~5725 MHz	☒ 5725~5850 MHz
Operating Mode	☒ Other	
	☐ Slave without radar detection	
Type of EUT	☒ Stand-alone	
Operational Condition	☐AC à ☐Other	
	☒DC à ☒Other à ☐From Battery ☐2.0~3.3Vdc	

Specification of Accessory				
☐**AC/DC Adapter # (Charger)**	**Brand Name**	N/A	**Model Name**	N/A
	Power Rating	N/A		

Antenna Type / Gain						
Ant.		**Manufacture**		**Other**		**-**
1		N/A		☒PCB		☐-
Ant.	**Port**	☐**BT**	☐**Zigbee**	☐**WiFi_2.4G**	☒**WiFi_5G**	☐**WiFi_6G**
		Gain (dBi)				
1	1	-	-	-	0.84	-

Note:
☐**2.4G** -
☒**5G** 1Tx_1Rx
☐**6G** -
☐**BT** -
☐**Zigbee** -

Standard Product Specification à General			
IEEE Standard	**Frequency Range (MHz)**	**CH. Frequency (MHz)**	**Number of Channel**
☒ 802.11a(HT20)	5150-5250	5180-5240	36-48 à 4
☒ 802.11n(HT20)	5725-5850	5745-5825	149-165 à 5
☒ 802.11n(HT40)	5150-5250	5190-5230	36-46 à 2
	5725-5850	5755-5795	151-159 à 2

1. 7 Applicable Standards

Applicable Standards	
According to the specifications of the manufacturer, the EUT must comply with the requirements of the following standards: ☒FCC Part 15 Subpart E 15.407 ☒FCC KDB 789033 D02 v02r01 ☒FCC KDB 414788 D01 Radiated Test Site v01r01 ☐FCC KDB 662911 D01 Multiple Transmitter Output v02r01 ☒ANSI C63.10-2013	
Note:	1)All test items were verified and recorded according to the standards and without any deviation during the test. 2)This EUT has also been tested and complied with the requirements of FCC 15 Part 15, Subpart B, recorded in a separate test report.

2. Technical Test

2. 1 Summary of Test Results

The EUT has been tested according to the following specifications:

FCC Rules	Test Type	Limit -> U-NII-1/2A/2C	Limit -> U-NII-3	Result	Notes
2.1049 & 15.403(i)	6dB, 26dB & 99% Bandwidth	-	6dB Bandwidth > 500kHz	**Pass**	Complies
15.407(a)	Maximum Conducted Output Power	≤ 24 dBm	≤ 30 dBm	**Pass**	Complies
15.407(a)	Power Spectral Density	≤ 11 dBm/MHz	≤ 30 dBm/500kHz	**Pass**	Complies
15.407(b)	Unwanted Emissions	15.407(b) & 15.209(a)	15.407(b)(4)(i) &15.209(a)	**Pass**	Complies
15.207	AC Conducted Emission	15.207(a)	15.207(a)	**Pass**	Complies
15.407(g)	Frequency Stability	Within Operation Band	Within Operation Band	**Pass**	Complies
15.407(c)	Automatically Discontinue Transmission	Discontinue Transmission	Discontinue Transmission	**Pass**	Complies
15.203 & 15.407(a)	Antenna Requirement	N/A	N/A	**Pass**	Complies
1.1307(b)(1) & 2.1091	Maximum Permissible Exposure (MPE)	< 1mW/cm^2	< 1mW/cm^2	**Pass**	Complies

2. 2 Antenna Requirement

Regulation	
Per § 15.203, an intentional radiator shall be designed to ensure that no antenna other than that furnished by the responsible party shall be used with the device. The use of a permanently attached antenna or of an antenna that uses a unique coupling to the intentional radiator shall be considered sufficient to comply with the provisions of this section. The manufacturer may design the unit so that a broken antenna can be replaced by the user, but the use of a standard antenna jack or electrical connector is prohibited. According to FCC 47 CFR Section 15.407(a)(1)(2) ,if transmitting antenna directional gain is greater than 6 dBi, both the peak transmit power and the peak power spectral density shall be reduced by the amount in dB that the directional gain of the antenna exceeds 6 dBi.	
Result	☒The EUT has one external PCB antenna with the I-PEX connector, which was permanently attached. ☒The antenna peak gain of EUT is less than 6 dBi. Therefore, it is not necessary to reduce maximum peak output power limit The antenna gain: Refer to section 1.6 ☒The antenna location: Refer to internal photo. Therefore, the EUT complies with Section 15.203 of the FCC rules.

2. 3 Measurement Uncertainty

Measurement	Frequency	Uncertainty
Conducted emissions	0.15MHz ~ 30MHz	3.20
Radiated emissions	9kHz ~ 30MHz	4.20
Radiated emissions	30MHz ~ 300MHz	4.62
Radiated emissions	300MHz ~1000MHz	4.62
Radiated emissions	1GHz ~ 18GHz	4.86
Radiated emissions	18GHz ~ 40GHz	3.80
Conducted Power	-	1.60
Conducted Emissions	-	1.60
Occupied Channel Bandwidth	-	2.0%
Band Edge	-	1.60
Conducted Power Spectral Density	-	1.60
Note:	This uncertainty represents an expanded uncertainty expressed at approximately the 95% confidence level using a coverage factor of k=2	

Conformity Decision Rule
The applied conformity decision rule is based on ILAC G8:09/2019 clause 4.2.1 Binary Statement for Simple Acceptance Rule (w = 0).

2. 4 Test Configuration

RLAN Test Mode

Final test mode of conducted test items and radiated spurious emissions are considering the modulation and worse data rates as below table.

Summary Tables of Test Mode			
Test Item	**Modulation**	**Data Rate**	**Channel Plan**
Conducted Cases	802.11a(HT20)	6 Mbps	5180-5240 / 5745-5825
	802.11n(HT20)	MCS 0	5180-5240 / 5745-5825
	802.11n(HT40)	MCS 0	5190-5230 / 5755-5795
Radiated Cases	802.11a(HT20)	6 Mbps	5180-5240 / 5745-5825
	802.11n(HT20)	MCS 0	5180-5240 / 5745-5825
	802.11n(HT40)	MCS 0	5190-5230 / 5755-5795
AC Conducted Emission	EUT normal working with normal link		
EUT Operation Test Setup			
Pre-Scan has been conducted to determine the worst-case mode from all possible combinations. Only the worst test mode data was reported. For Tx function, the engineering test program was provided and enabled to make EUT link with controller to continuous transmit/receive. For AC power line conducted emissions, the EUT was set to working normal.			
Pre-Scan Mode			
Test Mode	**Modulation**	**Data Rate**	**Channel Plan**
1	802.11a(HT20)	6 Mbps	5180-5240 / 5745-5825
2	802.11n(HT20)	MCS 0	5180-5240 / 5745-5825
3	802.11n(HT40)	MCS 0	5190-5230 / 5755-5795
Conducted Emissions à Final			
FCC Part 15.407 Requirements for NII Systems	**Test Mode**	1,2,3	
☒AC Conducted Emissions à Final			
Test Mode	1		
☒Radiated Emissions à Final			
Test Mode	1		
Note: The test modes were carried out for all operation modes (include link and idle). The final test mode of the EUT was the worst test mode for Mode 1, and its test data was reported.			

Support Unit				
Device	**Manufacturer**	**Model # Serial #**	**FCC ID/ DoC**	**Cable**
Notebook	HP	EliteBook 2560p	DoC	1.5m unshielded power cord
AC/DC Adapter	HP	PA-1650-02HC	DoC	1.5m unshielded power cord

☒ANSI C63.10:2013 - Test arrangement for power-line conducted emissions (product with accessories)

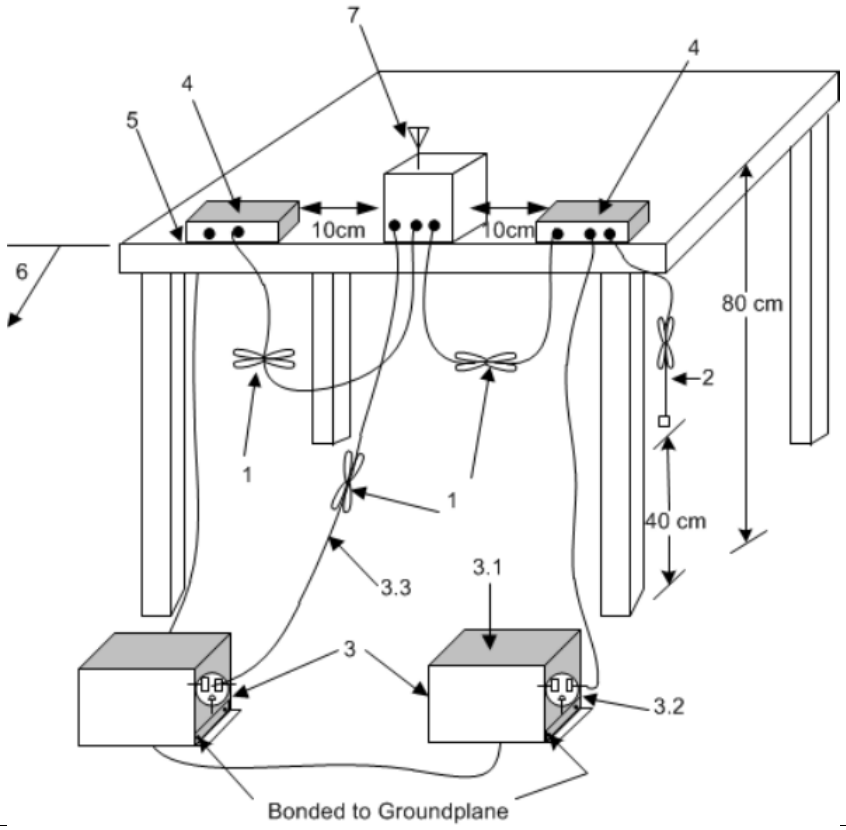

1—Interconnecting cables that hang closer than 40 cm to the ground plane shall be folded back and forth in the center forming a bundle 30 cm to 40 cm long.
2—The I/O cables that are not connected to an accessory shall be bundled in the center. The end of the cable may be terminated, if required, using the correct terminating impedance. The overall length shall not exceed 1 m.
3—EUT connected to one LISN. Unused LISN measuring port connectors shall be terminated in 50 Ω loads. LISN may be placed on top of, or immediately beneath, reference ground plane.
3.1—All other equipment powered from additional LISN(s).
3.2—A multiple-outlet strip may be used for multiple power cords of non-EUT equipment.
3.3—LISN at least 80 cm from nearest part of EUT chassis.
4—Non-EUT components of EUT system being tested.
5—Rear of EUT, including peripherals, shall all be aligned and flush with edge of tabletop.
6—Edge of tabletop shall be 40 cm removed from a vertical conducting plane that is bonded to the ground plane.
7—Antenna can be integral or detachable. If detachable, then the antenna shall be attached for this test.

☒ANSI C63.10:2013 - Test arrangement for radiated emissions (tabletop product)

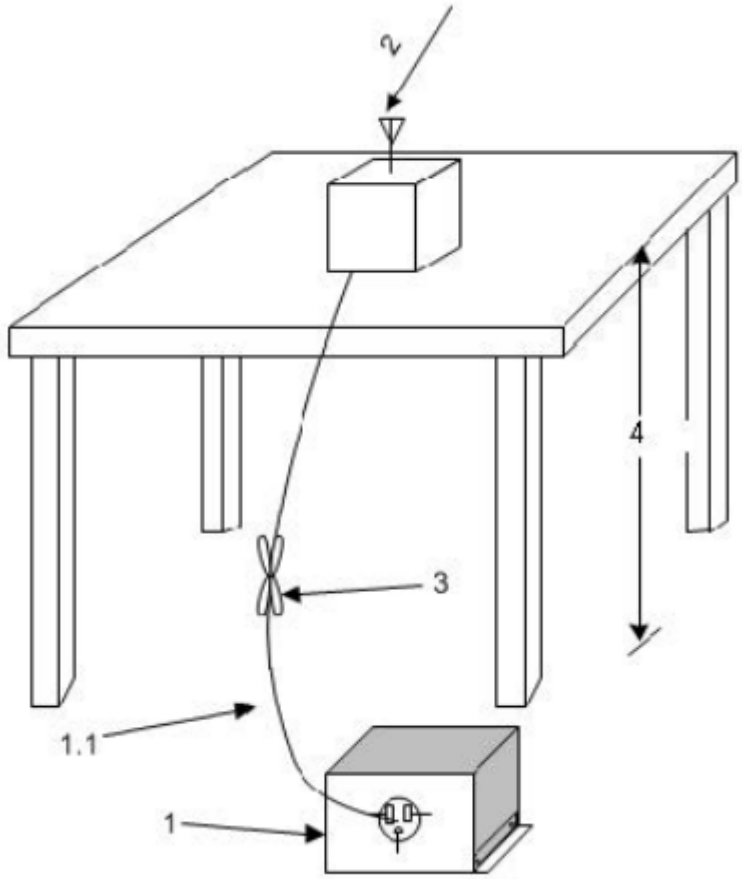

1—A LISN is optional for radiated measurements between 30 MHz and 1000 MHz but not allowed for measurements below 30 MHz and above 1000 MHz. If used, then connect EUT to one LISN. Unused LISN measuring port connectors shall be terminated in 50 Ω loads. The LISN may be placed on top of, or immediately beneath, the reference ground plane.
1.1—LISN spaced at least 80 cm from the nearest part of the EUT chassis.
2—Antenna can be integral or detachable, depending on the EUT.
3—Interconnecting cables that hang closer than 40 cm to the ground plane shall be folded back and forth in the center forming a bundle 30 cm to 40 cm long.
4—For emission measurements at or below 1 GHz, the table height shall be 80 cm. For emission measurements above 1 GHz, the table height shall be 1.5 m for measurements, except as otherwise specified.

☐ANSI C63.10:2013 - Test arrangement for radiated and conducted emissions for floor-standing unlicensed wireless devices

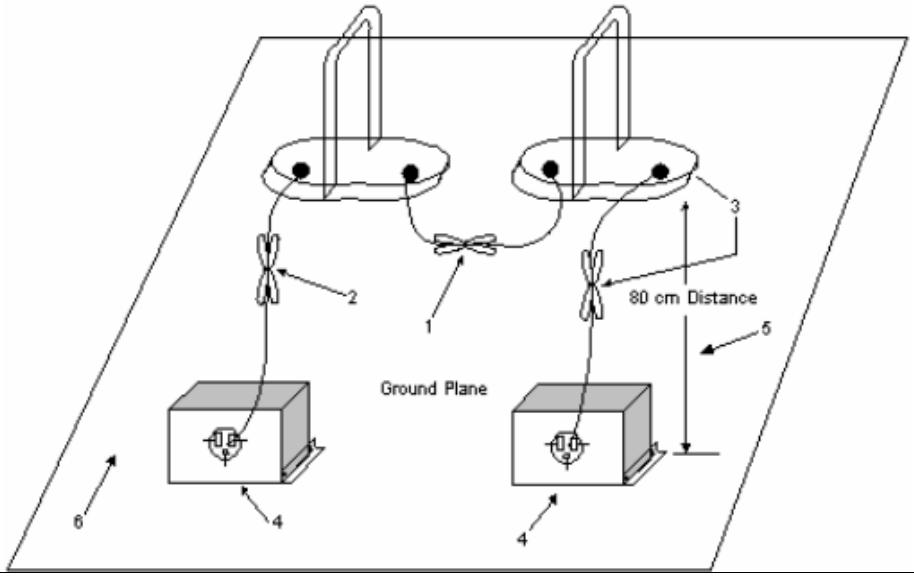

1—Excess I/O cables shall be bundled in the center. If bundling is not possible, then the cables shall be arranged in serpentine fashion. Bundling shall not exceed 40 cm in length.
2—Excess power cords shall be bundled in the center or shortened to an appropriate length.
3—EUT and all cables shall be insulated, if required, from the ground plane by up to 12 mm of insulating material.
4—EUT connected to one LISN. LISN may be placed on top of, or immediately beneath, the ground plane.
i All other equipment powered from a second LISN or additional LISN(s).
ii A multiple-outlet strip may be used for multiple power cords of non-EUT equipment.
5—Horizontal projection from the closest point of EUT to the nearest point of the LISN. For radiated emission testing, the LISNs shall be removed.
6—Ground reference plane.

3. EUT Modifications

No modification by test lab.

4. Conducted Power Line Test

4. 1 Test Equipment

Please refer to Section 10 this report.

4. 2 Test Procedure

Test Method	
☒	The EUT and simulators are connected to the main power through a line impedance stabilization network (L.I.S.N.). This provides a 50 ohm/50uH coupling impedance for the measuring equipment. The peripheral devices are also connected to the main power through a LISN that provides a 50ohm/50uH coupling impedance with 50ohm termination. Both sides of A.C. line are checked for maximum conducted interference. In order to find the maximum emission., the relative positions of equipment and all of the interface cables must be changed according to ANSI C63.10:2013 on conducted measurement. Conducted emissions were invested over the frequency range from 0.15MHz to 30MHz using a receiver bandwidth of 9kHz.

4. 3 Test Setup

Test Setup

AC Line Conducted Emissions

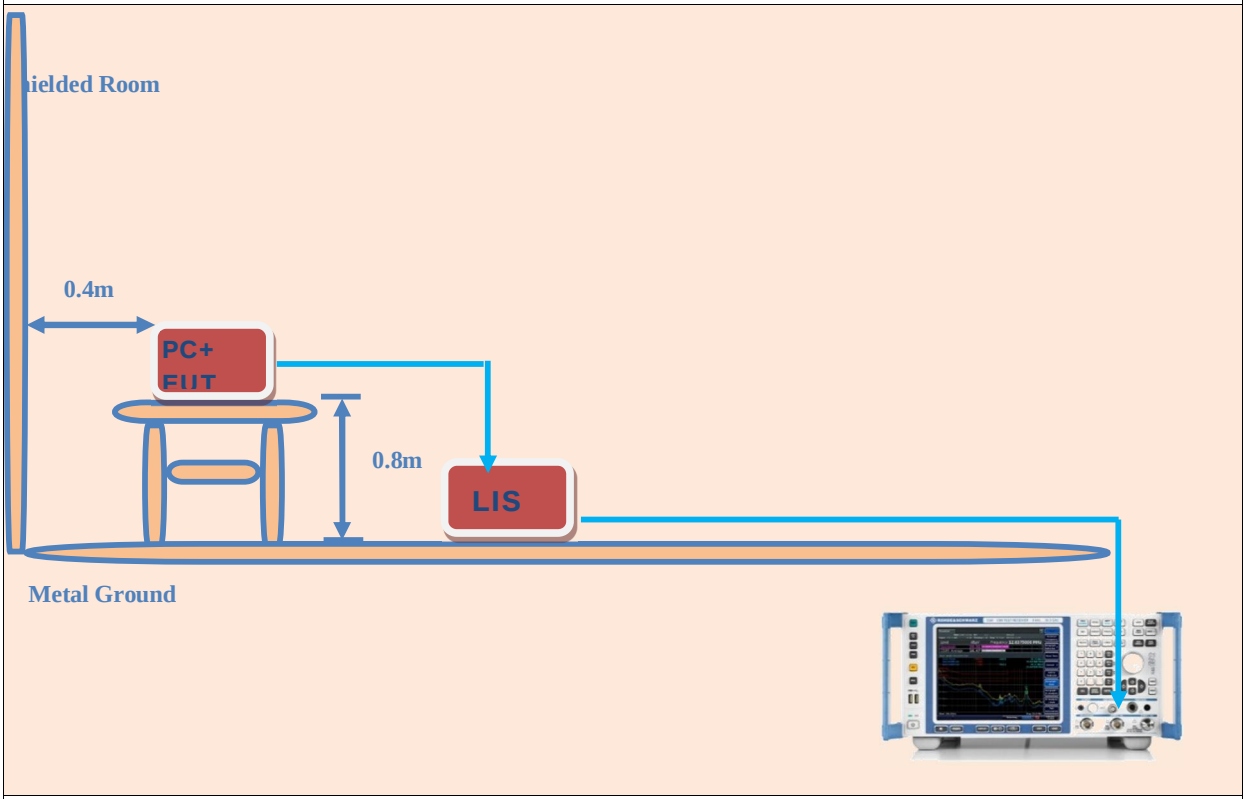

This test is applicable for radio equipment and/or ancillary equipment for fixed use powered by the AC mains.
This test shall be performed on a representative configuration of the radio equipment, the associated ancillary equipment, or a representative configuration of the combination of radio and ancillary equipment.
This test assesses the level of internally generated electrical noise present on the AC power input/output ports.

4. 4 Configuration of the EUT

Refer to section 2.4 of this test report.

4. 5 EUT Operating Condition

Refer to section 2.4 of this test report.

4. 6 Conducted Power Line Emission Limits

FCC Part 15 Paragraph 15.207 (dBuV)	
Frequency Range (MHz)	**QP/AV**
0.15 – 0.5	66-56/56-46
0.5 – 5.0	56/46
5.0 - 30	60/50

Note: In the above table, the tighter limit applies at the band edges.

4. 7 Conducted Power Line Test Result

Test Results:	Refer to Appendix

5. FCC Part 15.407 Requirements for 802.11a/n/ac/ax Systems

5. 1 Test Equipment

Please refer to Section 10 this report.

5. 2 Test Procedure

<table>
<tr><td colspan="3">6dB and 26dB and 99% Occupied Bandwidth</td></tr>
<tr><td colspan="3">Refer to FCC KDB 789033 D02, section C for EBW and clause D for OBW measurement.
Refer to ANSI C63.10, section 6.9.1 for occupied bandwidth testing.
Refer as IC RSS-Gen, section 4.6 for bandwidth testing.</td></tr>
<tr><td rowspan="5">Test Method:</td><td colspan="2">Section C) Bandwidth Measurement
*Emission Bandwidth (EBW) and 99% OBW</td></tr>
<tr><td>1. Set RBW = approximately 1% of the emission bandwidth.
2. Set the VBW > RBW.
3. Detector = Peak.
4. Trace mode = max hold
5. Measure the maximum width of the emission that is 26 dB down from the peak of the emission.</td><td>Compare this with the RBW setting of the analyzer. Readjust RBW and repeat measurement as needed until the RBW/EBW ratio is approximately 1%.6. For 99% Bandwidth Measurement, the spectrum analyzer's resolution bandwidth (RBW) is set to 1%~5% of the OBW and set the Video bandwidth (VBW) ⩾ 3 * RBW.
7. Measure and record the results in the test report.</td></tr>
<tr><td colspan="2">Section C) Bandwidth Measurement
*Minimum Emission Bandwidth for the band 5.725 - 5.85 GHz</td></tr>
<tr><td>1. Set RBW = 100kHz.
2. Set the VBW ⩾ 3 x RBW.
3. Detector = Peak.
4. Trace mode = max hold</td><td>5. Measure the maximum width of the emission that is 6 dB down from the peak of the emission.
6. Measure and record the results in the test report.</td></tr>
<tr><td colspan="3">Maximum Conducted Output Power Measurement:</td></tr>
<tr><td colspan="3">Average over on/off periods with duty factor
Refer to FCC KDB 789033 D02, section E Method SA-2 (spectral trace averaging).
Refer to FCC KDB 789033 D02, section E Method SA-2 Alt. (RMS detection with slow sweep speed)</td></tr>
<tr><td colspan="3">Maximum conducted output power may be measured using a spectrum analyzer/EMI receiver or an RF power meter. Refer to III.A and III.C for additional guidance for devices that use channel aggregation.</td></tr>
<tr><td rowspan="4">Test Method:</td><td>(i) Measure the duty cycle, x, of the transmitter output signal as described in II.B.
(ii) Set span to encompass the entire EBW (or, alternatively, the entire 99% occupied bandwidth) of the signal.
(iii) Set RBW = 1 MHz.
(iv) Set VBW ⩾ 3 MHz.
(v) Number of points in sweep ⩾ 2 x span / RBW. (This ensures that bin-to-bin spacing is ⩽ RBW/2, so that narrowband signals are not lost between frequency bins.)
(vi) Manually set sweep time ⩾ 10 x (number of points in sweep) x (total on/off period of the transmitted signal).
(vii) Set detector = power averaging (rms).
(viii) Perform a single sweep.</td><td>(ix) Compute power by integrating the spectrum across the EBW (or, alternatively, the entire 99% occupied bandwidth) of the signal using the instrument’s band power measurement function with band limits set equal to the EBW (or occupied bandwidth) band edges. If the instrument does not have a band power function, sum the spectrum levels (in power units) at 1 MHz intervals extending across the EBW (or, alternatively, the entire 99% occupied bandwidth) of the spectrum.
(x) Add 10 log (1/x), where x is the duty cycle, to the measured power in order to compute the average power during the actual transmission times (because the measurement represents an average over both the on and off times of the transmission). For example, add 10 log (1/0.25) = 6 dB if the duty cycle is 25%.</td></tr>
<tr><td colspan="2">Wideband RF power meter and average over on/off periods with duty factor
Refer as FCC KDB 789033 D02, clause E Method PM-G (using an RF average power meter).</td></tr>
<tr><td colspan="2">For conducted measurement.
*If the EUT supports multiple transmit chains using options given below:
Refer to FCC KDB 662911, In-band power measurements. Using the measure-and-sum approach, measured all transmit ports individually. Sum the power (in linear power units e.g., mW) of all ports for each individual sample and save them.
*If multiple transmit chains, EIRP calculation could be following as methods:
Ptotal = P1 + P2 +… + Pn
(calculated in linear unit [mW] and transfer to log unit [dBm])
EIRPtotal = Ptotal + DG</td></tr>
<tr><td colspan="2">For radiated measurement.
*Refer to FCC KDB 789033 D02 section II A.1.F ”Antenna-port Conducted versus Radiated Testing”
*Refer to ANSI C63.10, section 6.6 for radiated emissions above 1GHz.
*Refer to FCC KDB 412172 D01 section 2.2 for EIRP calculation.</td></tr>
</table>

<table>
<tr><td colspan="3">Power Spectral Density:</td></tr>
<tr><td colspan="3">Refer to FCC KDB 789033 D02, F)5) power spectral density can be measured using resolution bandwidths < 1 MHz provided that the results are integrated over 1 MHz bandwidth
[duty cycle ≥ 98% or external video / power trigger]
Refer to FCC KDB 789033 D02, section E Method SA-1 (spectral trace averaging).
Refer to FCC KDB 789033 D02, section E Method SA-1 Alt. (RMS detection with slow sweep speed)
duty cycle < 98% and average over on/off periods with duty factor
Refer to FCC KDB 789033 D02, section E Method SA-2 (spectral trace averaging).
Refer to FCC KDB 789033 D02, section E Method SA-2 Alt. (RMS detection with slow sweep speed)</td></tr>
<tr><td colspan="3">Peak power spectral density procedures that the same method as used to determine the conducted output power shall be used to determine the peak power spectral density and use the peak search function on the spectrum analyzer to find the peak of the spectrum. For the peak power spectral density shall be measured using below options:</td></tr>
<tr><td rowspan="4">Test Method:</td><td colspan="2">For devices operating in the bands UNII-1/2A/2C # Method SA-2 #
(trace averaging across on and off times of the EUT transmissions, followed by duty cycle correction).</td></tr>
<tr><td>• Measure the duty cycle.
• Set span to encompass the entire emission bandwidth (EBW) of the signal.
• Set RBW = 1 MHz.
• Set VBW ≥ 3 MHz.
• Number of points in sweep ≥ 2 Span / RBW.
• Sweep time = auto.
• Detector = RMS</td><td>• Trace average at least 100 traces in power averaging mode.
• Add 10 log(1/x), where x is the duty cycle, to the measured power in order to compute the average power during the actual transmission times. For example, add 10 log(1/0.25) = 6 dB if the duty cycle is 25 percent.</td></tr>
<tr><td colspan="2">For devices operating in the band UNII-3 # Method SA-2 #
(trace averaging across on and off times of the EUT transmissions, followed by duty cycle correction).</td></tr>
<tr><td>• Measure the duty cycle.
• Set span to encompass the entire emission bandwidth (EBW) of the signal.
• Set RBW = 500kHz (or 300 kHz if the SA can’t set RBW=500kHz).
• Set VBW ≥ 1 MHz.
• Number of points in sweep ≥ 2 Span / RBW.
• Sweep time = auto.
• Detector = RMS</td><td>• Trace average at least 100 traces in power averaging mode.
• If the SA can’t set RBW=500kHz, then add 10 log(500kHz/RBW) to the test result.
• Add 10 log(1/x), where x is the duty cycle, to the measured power in order to compute the average power during the actual transmission times. For example, add 10 log(1/0.25) = 6 dB if the duty cycle is 25 percent.</td></tr>
<tr><td colspan="3">For conducted measurement.</td></tr>
<tr><td>Test Method:</td><td colspan="2">* If the EUT supports multiple transmit chains using options given below:
Option 1: Measure and sum the spectra across the outputs. Refer as FCC KDB 662911, In-band power spectral density (PSD). Sample all transmit ports simultaneously using a spectrum analyzer for each transmit port. Where the trace bin-by-bin of each transmit port summing can be performed. (i.e., in the first spectral bin of output 1 is summed with that in the first spectral bin of output 2 and that from the first spectral bin of output 3, and so on up to the NTX output to obtain the value for the first frequency bin of the summed spectrum.). Add up the amplitude (power) values for the different transmit chains and use this as the new data trace.
Option 2: Measure and sum spectral maxima across the outputs. With this technique, spectra are measured at each output of the device at the required resolution bandwidth. The maximum value (peak) of each spectrum is determined. These maximum values are then summed mathematically in linear power units across the outputs. These operations shall be performed separately over frequency spans that have different out-of-band or spurious emission limits,
Option 3: Measure and add 10 log(N) dB, where N is the number of transmit chains. Refer as FCC KDB 662911, In-band power spectral density (PSD). Performed at each transmit chains and each transmit chains shall be compared with the limit have been reduced with 10 log(N).
Or each transmit chains shall be add 10 log(N) to compared with the limit.
* If multiple transmit chains, EIRP PPSD calculation could be following as methods:
PPSDtotal = PPSD1 + PPSD2 +… + PPSDn
(calculated in linear unit [mW] and transfer to log unit [dBm])
EIRPtotal = PPSDtotal + DG</td></tr>
<tr><td colspan="3">For radiated measurement</td></tr>
<tr><td>Test Method:</td><td colspan="2">* Refer as FCC KDB 789033 D02 clause II A.1.F ”Antenna-port Conducted versus Radiated Testing”
* Refer as ANSI C63.10, clause 6.6 for radiated emissions above 1GHz.
* Refer as FCC KDB 412172 D01 clause 2.2 for EIRP calculation.</td></tr>
</table>

Band edge measurements:		
Test Method:	According to section II.G.3(d) General Requirements for Unwanted Emissions Measurements of 789033 D02 General UNII Test Procedures New Rules v02r01 Unwanted band-edge emissions may be measured using either of the special band-edge measurement techniques (the marker-delta or integration methods) described in the following paragraphs. Note that the marker-delta method is primarily a radiated measurement technique that requires the 99% occupied bandwidth edge to be within 2 MHz of the authorized band edge, whereas the integration method can be used in either a radiated or conducted measurement without any special requirement with regards to the displacement of the unwanted emission(s) relative to the authorized bandwidth.	
	• RBW = 1 MHz • VBW ⩾ 3 MHz • Detector = Peak	• Sweep time = auto • Trace mode = max hold
Frequency Stability Measurement:		
Test Method:	a)The transmitter output (antenna port) was connected to the spectrum analyzer. b)EUT have transmitted absence of modulation signal and fixed channelize. c)Set the spectrum analyzer span to view the entire absence of modulation emissions bandwidth. d)Set RBW = 10 kHz, VBW = 10 kHz with peak detector and maxhold settings. e)fc is declaring of channel frequency. Then the frequency error formula is (fc-f)/fc × 106 ppm and the limit is less than ±20ppm (IEEE 802.11 specification). f)The test extreme voltage is to change the primary supply voltage from 85 to 115 percent of the nominal value g)Extreme temperature is 0°C~40°C	
	a)Attenuation: Auto b)Span Frequency: Entire absence of modulation emissions bandwidth	c)RBW: 10 kHz d)VBW: 10 kHz e)Sweep Time: Auto

5. 3 Test Setup

Conducted Measurement (Spectrum Analyzer)

Conducted Measurement (Power Meter)

5. 4 Configuration of the EUT

Same as section 4.4 of this report

5. 5 EUT Operating Condition

Same as section 4.5 of this report.

5. 6 Limit

26dB Bandwidth and 99% Occupied Bandwidth:	
Limit:	No restriction limits.
6 dB Bandwidth:	
Limit:	For digital modulation systems, the minimum 6dB bandwidth shall be at least 500 kHz.
Maximum Conducted Output Power Measurement:	
☒ 5.15~5.25 GHz	
☐ Limit of Outdoor access point:	☐ Limit of Indoor access point:
The maximum conducted output power over the frequency band of operation shall not exceed 1 W (30dBm) provided the maximum antenna gain does not exceed 6 dBi. If transmitting antennas of directional gain greater than 6 dBi are used, both the maximum conducted output power and the maximum power spectral density shall be reduced by the amount in dB that the directional gain of the antenna exceeds 6 dBi. The maximum e.i.r.p. at any elevation angle above 30 degrees as measured from the horizon must not exceed 125 mW (21 dBm).	The maximum conducted output power over the frequency band of operation shall not exceed 1 W (30dBm) provided the maximum antenna gain does not exceed 6 dBi. If transmitting antennas of directional gain greater than 6 dBi are used, both the maximum conducted output power and the maximum power spectral density shall be reduced by the amount in dB that the directional gain of the antenna exceeds 6 dBi.
☐ Limit of Fixed point-to-point access points:	☒ Limit of Mobile and portable client devices:
The maximum conducted output power over the frequency band of operation shall not exceed 1 W (30dBm). Fixed point-to-point U-NII devices may employ antennas with directional gain up to 23 dBi without any corresponding reduction in the maximum conducted output power or maximum power spectral density. For fixed point-to-point transmitters that employ a directional antenna gain greater than 23 dBi, a 1 dB reduction in maximum conducted output power and maximum power spectral density is required for each 1 dB of antenna gain in excess of 23 dBi.	The maximum conducted output power over the frequency band of operation shall not exceed 250 mW (24dBm) provided the maximum antenna gain does not exceed 6 dBi. If transmitting antennas of directional gain greater than 6 dBi are used, both the maximum conducted output power and the maximum power spectral density shall be reduced by the amount in dB that the directional gain of the antenna exceeds 6 dBi.
☐ 5.25-5.35 GHz & ☐ 5.470-5.725 GHz	
The maximum conducted output power over the frequency bands of operation shall not exceed the lesser of 250 mW (24dBm) or 11 dBm + 10 log B, where B is the 26 dB emission bandwidth in megahertz. If transmitting antennas of directional gain greater than 6 dBi are used, both the maximum conducted output power and the maximum power spectral density shall be reduced by the amount in dB that the directional gain of the antenna exceeds 6 dBi.	
☒ 5.725~5.85 GHz	
The maximum conducted output power over the frequency band of operation shall not exceed 1 W (30dBm). If transmitting antennas of directional gain greater than 6 dBi are used, both the maximum conducted output power and the maximum power spectral density shall be reduced by the amount in dB that the directional gain of the antenna exceeds 6 dBi. However, fixed point-to-point U-NII devices operating in this band may employ transmitting antennas with directional gain greater than 6 dBi without any corresponding reduction in transmitter conducted power.	
Power Spectral Density	
☒ 5.15~5.25 GHz	☐ Limit of Outdoor access point: 17 dBm/MHz
	☐ Limit of Fixed point-to-point access points: 17 dBm/MHz
	☐ Limit of Indoor access point: 17 dBm/MHz
	☒ Limit of Mobile and portable client devices: 11 dBm/MHz
☐ 5.25-5.35 GHz	11 dBm/MHz
☐ 5.470-5.725 GHz	11 dBm/MHz
☒ 5.725~5.85 GHz	30 dBm/500kHz
Frequency Stability Measurement:	
Limit:	In-band emission is maintained within the band of operation under all conditions of normal operation as specified in the user's manual. The transmitter center frequency tolerance shall be ± 20 ppm maximum for the 5 GHz band (IEEE 802.11n specification).

5. 7 Test Result

A. 26dB Bandwidth and 99% Occupied Bandwidth

Test Results:	**Refer to Appendix**

B. 6 dB Bandwidth

Test Results:	**Refer to Appendix**

C. Peak Power

Test Results:	**Refer to Appendix**

D. Peak Power Spectral Density

Test Results:	**Refer to Appendix**

E. Frequency Stability

Test Results:	**Refer to Appendix**

6. Radiated Emission Radiated Emission at 3 Meters

6. 1 Test Equipment

Please refer to Section 10 this report.

6. 2 Test Procedure

The radiated emissions test below 30 MHz is performed in the following steps:					
Frequency (MHz)	**RBW(kHz)**	**Step Size(kHz)**	**Pre-Scan**	**Pre-Scan with FFT**	**Final Scan**
0.009 ~ 0.15	0.2	≤0.1	Peak, Average	Peak Quasi-Peak, Average	Peak Quasi-Peak, Average
0.15 ~ 30	9	≤4.5	Peak, Average	Peak Quasi-Peak, Average	Peak Quasi-Peak, Average

The EUT was tested according to ANSI C63.10:2013.
a) The loop antenna is positioned with its plane perpendicular to the ground with the lowest height of the antenna 1 m above the ground.
b) The EUT is placed in its standard position on a turntable capable of rotation through 360° in the horizontal plane and arranged as tabletop or floor-standing equipment, as applicable. The EUT is switched on.
c) The measurement equipment is connected to the loop antenna and set-up according to the specifications of the test.
d) The EUT is turned to a position likely to get the maximum and the test antenna is rotated to detect the maximum of the fundamental in this EUT position.
e) Then the EUT is rotated in a horizontal plane through 360° in steps of 45°. Starting at 0°, at each table position the spectrum for the full frequency range is recorded. If the emission at a certain frequency is higher than the levels already recorded, the current table position is noted as the maximum position.
f) After the last pre-scan, the significant maximum emissions and their table positions are determined and collected in a list.
g) With the test receiver set to the first frequency of the list, the EUT is rotated by ±45° around the table position found during pre-scans while measuring the emission level continuously. For final scan, the worst-case table position is set and the maximum emission level is recorded.
h) Step g) is repeated for all other frequencies in the list.
i) Finally, for frequencies with critical emissions the loop antenna is rotated again to find the maximum of emission. At least, frequency and level of the six highest emissions relative to the limit have to be recorded. However, emissions more than 20 dB below the limit do not need to be reported.
If the EUT may be used in various positions, steps a) to i) are repeated in two other orthogonal positions. If the EUT may be used in one position only, steps a) to i) are repeated in one orthogonal position.

The radiated emissions test from 30 MHz to 960 MHz is performed in the following steps:					
Frequency (MHz)	**RBW(kHz)**	**Step Size(kHz)**	**Pre-Scan**	**Pre-Scan with FFT**	**Final Scan**
30 ~ 960	120	≤60	Peak	Quasi-Peak	Quasi-Peak

The EUT was tested according to ANSI C63.10:2013.
a) The measurement antenna is oriented initially for vertical polarization.
b) The EUT is placed in its standard position on a turntable capable of rotation through 360° in the horizontal plane and arranged as tabletop or floor-standing equipment, as applicable. The EUT is switched on.
c) The measurement equipment is connected to the measurement antenna and set-up according to the specifications of the test
d) The table position is set to 0°.
e) The antenna height is set to 1 m.
f) The spectrum for the full frequency range is recorded. If the emission at a certain frequency is higher than the levels already recorded, the polarization and height of the measurement antenna as well as the current table position are noted as the maximum position.
g) The antenna height is increased to 4 m in steps of 50 cm. At each height, step f) is repeated.
h) The polarization of the measurement antenna is changed to horizontal.
i) The antenna height is decreased from 4 m to 1 m in steps of 50 cm. At each height, step f) is repeated.
j) The EUT is rotated in a horizontal plane through 360° in steps of 60°. At each table position, steps e) to i) are repeated.
k) After the last pre-scan, the significant maximum emissions with their polarizations and heights of the measurement antenna as well as their table positions are determined and collected in a list.
l) With the test receiver set to the first frequency of the list, the measurement antenna is set to the polarization and height and the table is moved to the position as determined during pre-scans.
m) The antenna is moved by ±50 cm around this height and the EUT is rotated by ±60° around this table position while measuring the emission level continuously.
n) For final scan, the worst-case positions of antenna and table are set and the maximum emission level is recorded.
o) Steps l) to n) are repeated for all other frequencies in the list. At least, frequency and level of the six highest emissions relative to the limit have to be recorded. However, emissions more than 20 dB below the limit do not need to be reported.
If the EUT may be used in various positions, steps a) to o) are repeated in two other orthogonal positions.

The radiated emissions test above 960 MHz to 40 GHz is performed in the following steps:					
Frequency (MHz)	**RBW(kHz)**	**VBW(kHz)**	**Sweep Time**	**Detector**	**Trace Mode**
960~40000	1000	3000	AUTO	PK/AV	Max Hold
Radiated emissions above 960 MHz are measured according to clause 6.6 of ANSI C63.10 by conducting exploratory and final radiated emission tests. According to clause 6.6.4.1 of ANSI C63.10, measurements may be performed at a distance closer than that specified in the requirements. However, an attempt shall be made to avoid making final measurements in the near field of both the measurement antenna and the EUT. Final radiated emissions above 1 GHz are measured in a semi-anechoic chamber (SAC) with RF absorbing material on the floor between measurement antenna and EUT. The measurement distance is shown in the appropriate tests. The emissions of the EUT are recorded with an EMI test receiver.					

6. 3 Radiated Test Setup

For Frequencies below 30MHz

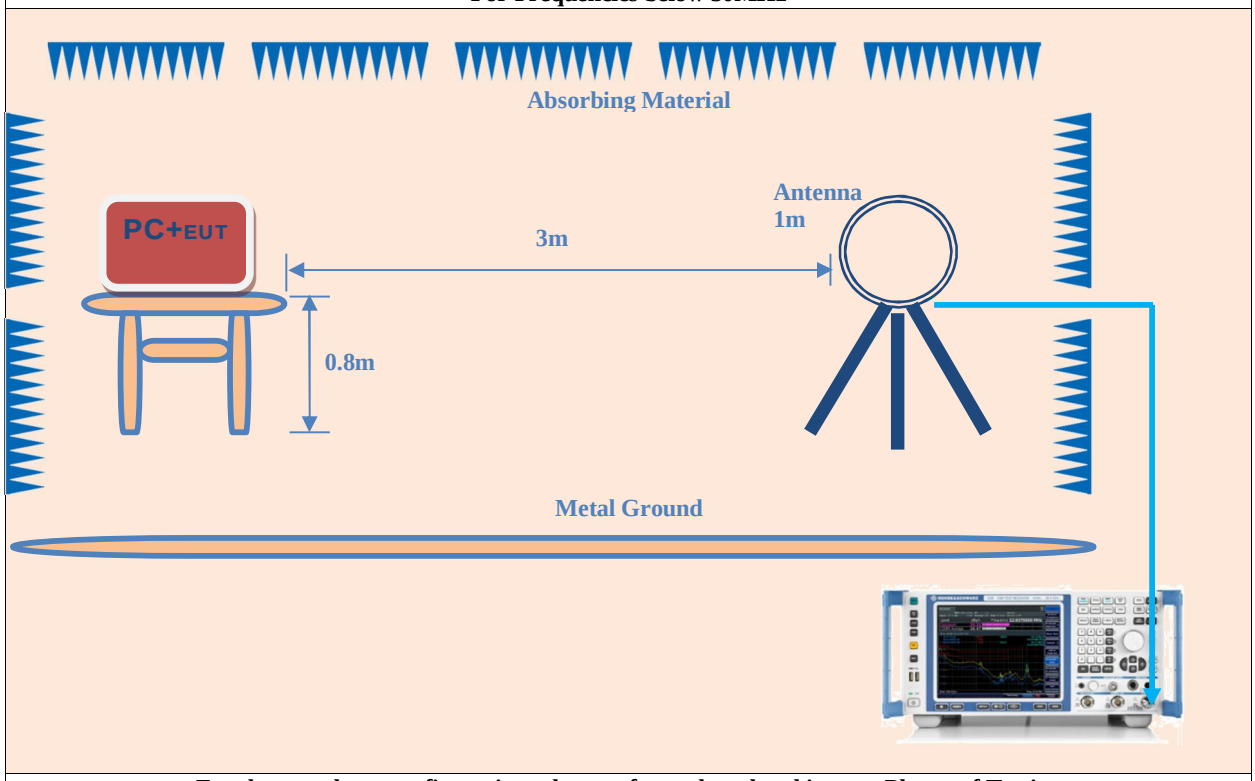

For the actual test configuration, please refer to the related items – Photos of Testing

For Frequencies below 1GHz

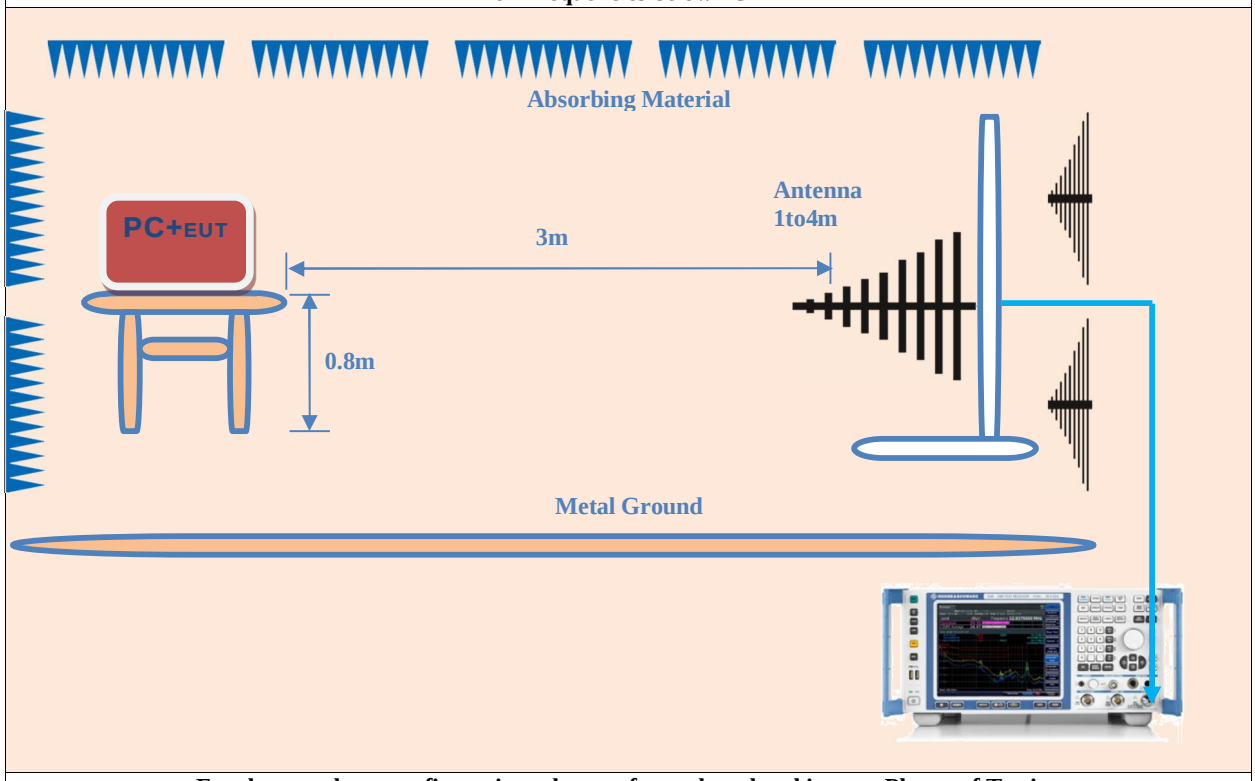

For the actual test configuration, please refer to the related items – Photos of Testing

For Frequencies 1GHz ~ 40GHz

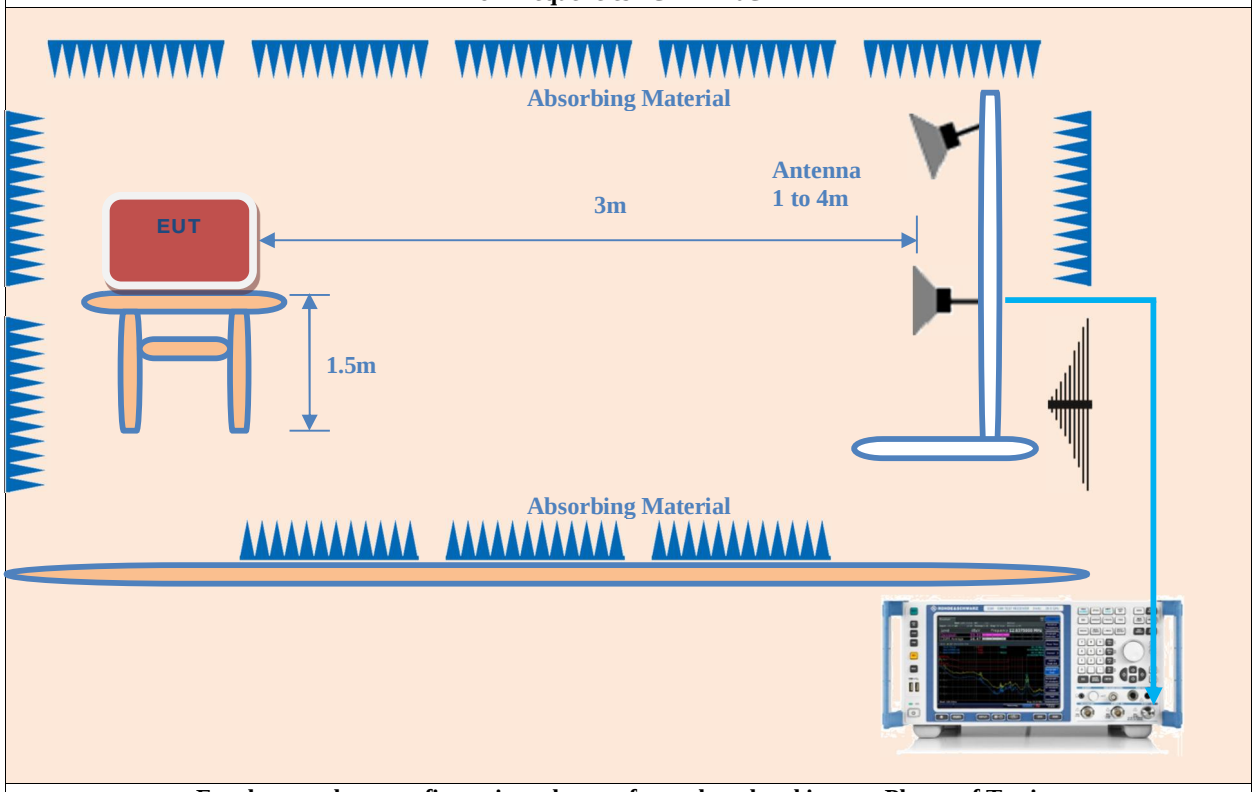

For the actual test configuration, please refer to the related items – Photos of Testing

6. 4 Configuration of the EUT

Same as section 2.4 of this report

6. 5 EUT Operating Condition

Same as section 2.4 of this report

6. 6 Radiated Emission Limit

Spurious Radiated Emission & Band Edge Emissions Measurement:				
Rule			Limit	
789033 D02 General UNII Test Procedure New Rules v01r03			Field Strength @3m	
			PK / 74 (dBuV/m	AV / 54 (dBuV/m)
Band	**Rule**		**EIRP Limit**	**Equivalent Field Strength @3m**
5.150-5.250 GHz	15.407(b)(1)		PK / -27 (dBm/MHz)	PK / 68.2 (dBuV/m)
5.250-5.350 GHz	15.407(b)(2)		PK / -27 (dBm/MHz)	PK / 68.2 (dBuV/m)
5.470-5.725 GHz	15.407(b)(3)		PK / -27 (dBm/MHz)	PK / 68.2 (dBuV/m)
5.725-5.850 GHz	☒	15.407(b)(4)(i)	PK / -27 (dBm/MHz) note1 PK / 10 (dBm/MHz) note2 PK / 15.6 (dBm/MHz) note3 PK / 27 (dBm/MHz) note4	PK / 68.2 (dBuV/m) note1 PK / 105.2 (dBuV/m) note2 PK / 110.8 (dBuV/m) note3 PK / 122.2 (dBuV/m) note4
	☐	15.407(b)(4)(ii)	Emission limits in section 15.247(d)	

note1: beyond 75 MHz or more above of the band edge.
note2: below the band edge increasing linearly to 10 dBm/MHz at 25 MHz above.
note3: below the band edge increasing linearly to a level of 15.6 dBm/MHz at 5 MHz above.
note4: from 5 MHz above or below the band edge increasing linearly to a level of 27 dBm/MHz at the band edge.

Note: The following formula is used to convert the equipment isotropic radiated power (eirp) to field strength:

$E = \frac{1000000\sqrt{30P}}{3}$ uV/m, Where P is the eirp (Watts).

FCC CFR 47, Part 15, Subpart C, Para, 15.205(a) – Restricted Frequency Bands

MHz	MHz	MHz	GHz
0.090 - 0.110	16.42 - 16.423	399.9 - 410	4.5 - 5.15
[1]0.495 - 0.505	16.69475 - 16.69525	608 - 614	5.35 - 5.46
2.1735 - 2.1905	16.80425 - 16.80475	960 - 1240	7.25 - 7.75
4.125 - 4.128	25.5 - 25.67	1300 - 1427	8.025 - 8.5
4.17725 - 4.17775	37.5 - 38.25	1435 - 1626.5	9.0 - 9.2
4.20725 - 4.20775	73 - 74.6	1645.5 - 1646.5	9.3 - 9.5
6.215 - 6.218	74.8 - 75.2	1660 - 1710	10.6 - 12.7
6.26775 - 6.26825	108 - 121.94	1718.8 - 1722.2	13.25 - 13.4
6.31175 - 6.31225	123 - 138	2200 - 2300	14.47 - 14.5
8.291 - 8.294	149.9 - 150.05	2310 – 2390	15.35 - 16.2
8.362 - 8.366	156.52475 - 156.525	2483.5 - 2500	17.7 - 21.4
8.37625 - 8.38675	156.7 - 156.9	2690 - 2900	22.01 - 23.12
8.41425 - 8.41475	162.0125 - 167.17	3260 - 3267	23.6 - 24.0
12.29 - 12.293	167.72 - 173.2	3332 - 3339	31.2 - 31.8
12.51975 - 12.52025	240 - 285	3345.8 - 3358	36.43 - 36.5
12.57675 - 12.57725	322 - 335.4	3600 - 4400	([2])
13.36 - 13.41	--	--	--

[1]Until February 1, 1999, this restricted band shall be 0.490–0.510MHz.
[2]Above 38.6

FCC 47 CFR, Part 15.209(a) – Field Strength Limits within Restricted Frequency Bands

Frequency (MHz)	Field Strength (μV/m)	Field Strength @3m (dBuV/m)
0.009 ~ 0.490	2,400/F (F in kHz)	128.5 ~ 93.8
0.490 ~ 1.705	24,000/F (F in kHz)	73.8 ~ 63
1.705 ~ 30	30	69.5
30 ~ 88	100	40
88 ~ 216	150	43.5
216 ~ 960	200	46
Above 960	500	53.9

FCC 47 CFR, Part 15.33 – Frequency range of radiated measurements.

(a) For an intentional radiator, the spectrum shall be investigated from the lowest radio frequency signal generated in the device, without going below 9 kHz, up to at least the frequency shown in this paragraph:	
☒	(1) If the intentional radiator operates below 10 GHz: to the tenth harmonic of the highest fundamental frequency or to 40 GHz, whichever is lower.
☐	(2) If the intentional radiator operates at or above 10 GHz and below 30 GHz: to the fifth harmonic of the highest fundamental frequency or to 100 GHz, whichever is lower.
☐	(3) If the intentional radiator operates at or above 30 GHz: to the fifth harmonic of the highest fundamental frequency or to 200 GHz, whichever is lower, unless specified otherwise elsewhere in the rules.
☐	(4) If the intentional radiator operates at or above 95 GHz: To the third harmonic of the highest fundamental frequency or to 750 GHz, whichever is lower, unless specified otherwise elsewhere in the rules.
☐	(5) If the intentional radiator contains a digital device, regardless of whether this digital device controls the functions of the intentional radiator or the digital device is used for additional control or function purposes other than to enable the operation of the intentional radiator, the frequency range shall be investigated up to the range specified in paragraphs (a)(1) through (4) of this section or the range applicable to the digital device, as shown in paragraph (b)(1) of this section, whichever is the higher frequency range of investigation.

6. 7 Radiated Emission Test Result

Test Results:	Refer to Appendix

7. Photographs - Test Setup

Refer to below setup

8. Photographs - EUT

Refer to Exhibits _ External Photos & Internal Photos

9. Label

Refer to Exhibits _ Label & Location Info

10. Test Equipment

Equipment/ Facilities	Manufacturer	Model #	Serial No.	Cal/Char Date	Due Date
Artificial Mains: Two Line V-Network	Rohde & Schwarz	EM5040A	KMO-SZ009M	2022/5/12	2024/5/12
EMI Test Receiver	Rohde & Schwarz	ESR7	KMO-SZ026M	2022/5/12	2024/5/12
Test Software	Rohde & Schwarz	ESR7	N/A	NCR	NCR
Loop Antenna	SCHWARZBECK	FMZB1519B	KMO-SZ411	2022/7/20	2025/7/20
Trilog-Super Broadband Antenna	SCHWARZBECK	VULB 9168	KMO-SZ412	2022/5/5	2025/5/5
Broad-Band Horn Antenna 1-18 GHz	SCHWARZBECK	BBHA 9120D	KMO-SZ413	2022/5/5	2025/5/5
Pre-Amplifier 1-18 GHz	SCHWARZBECK	BBV9718	KMO-SZ415	2022/10/15	2025/10/15
Pre-Amplifier 18-40 GHz	SCHWARZBECK	BBV9721	KMO-SZ416	2022/5/4	2025/5/4
Broad-Band Horn Antenna 18-40 GHz	SCHWARZBECK	BBHA 9170	KMO-SZ414	2022/7/20	2025/7/20
Spectrum Analyzer	Rohde & Schwarz	FSP40	KMO-SZ003	2023/12/14	2026/12/14
Power Meter	Rohde & Schwarz	OSP-120+OSP-B157	KMO-SZ237	2023/12/14	2026/12/14
3m Anechoic Chamber	SAEMC	966	KMO-SZ419	2022/10/17	2025/10/17

----------End of Report ----------