AlgoLaser DIY KIT mini

QUICK START GUIDE

Laser Engraver

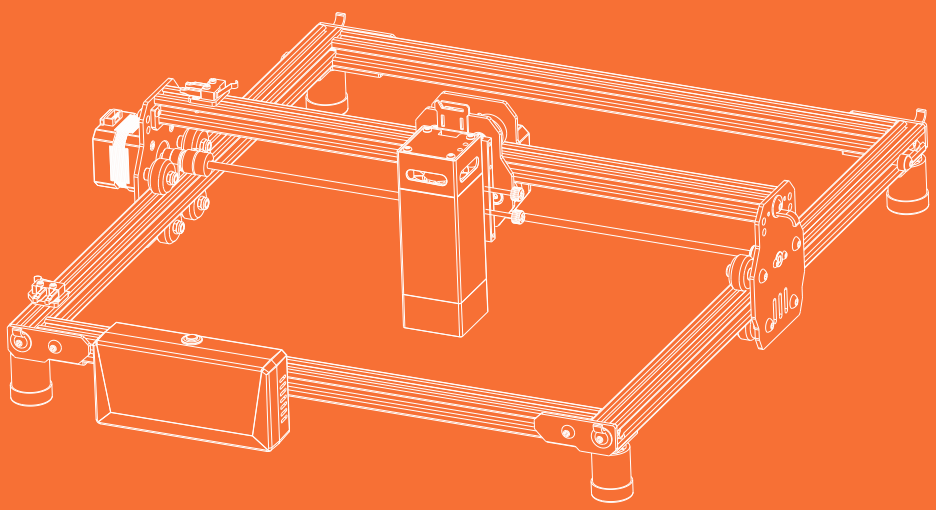

Always read the instructions before you start.

CONTENTS

01
Machine Assembly

02
How to Use

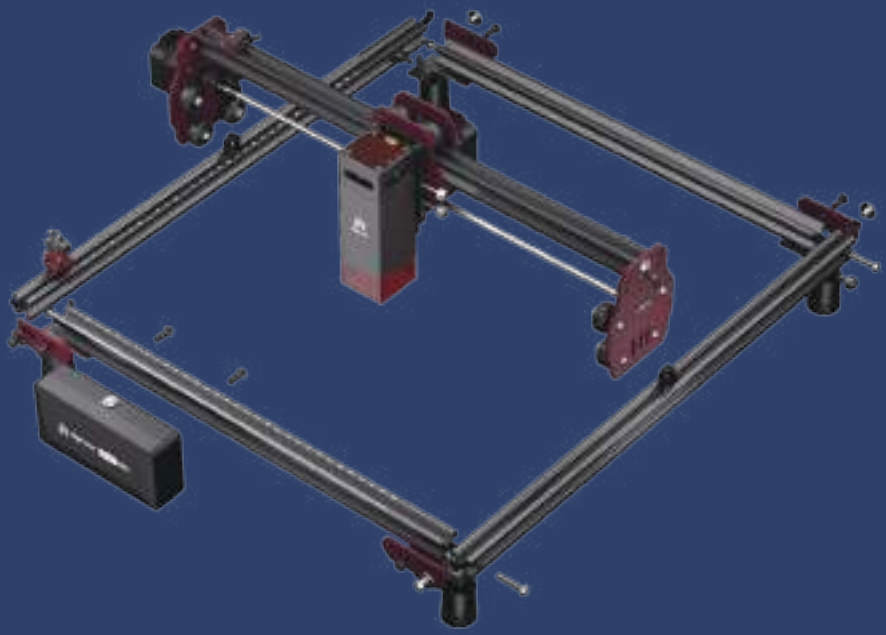

ENGRAVING

HAPPINESS

Thanks for choosing AlgoLaser!

We are so glad that it's you that gives it a home.

We have packed everything we have explored in laser engraving machines into the neatest form to help you harvest engraving happiness, obtain the greatest yield and realize your dream.

Tuston Tan

The Founder of AlgoLaser

Aftersale Policy

- **12-Months Limited Warranty**
  We provide 12 months warranty for every product from the date of purchase against defects in materials and workmanship. And we will offer repair or replacement service according to the product condition. Please note that this warranty does not cover damaged product caused by misuse or abuse.

- **Return or Exchange Policy**
  For detailed policy, please refer to the return and exchange policy on the platform you purchased from.

- **Misdelivery & Missing Parts**
  If you receive an incorrect product or discover missing parts after receiving the product, please contact our customer service. AlgoLaser will cover the shipping cost of the incorrect product or send the replacement parts.

- **Troubleshooting Support**
  AlgoLaser offers online troubleshooting guides that helps you to solve problems step-by-step. Please reach algolaser.com to get tutorial videos, FAQs, and tech support from professional engineers.

Aftersale Support

1. Please go to http://algolaser.com/support/ to submit your inquiry. To help engineer make faster judgment and provide effective solutions, please provide related pictures and videos within the inquiry.

2. Information needed:

Machine Model	Laser Module	Purchase Channel
Delivery Date	Computer System	Software
Problem Description, Video & Photo		

3. After submmitting, our engineer will reply you within 24 hours.

1.1 Disclaimer and Safety Guidelines

1. The laser engraver emits laser light. Placing any living body under the laser emission port (marked with an orange warning sign) is strictly forbidden.

2. Patients with photosensitive epilepsy are prohibited from using or approaching the laser engraver.

3. When using the laser engraver, the operator and anyone near the machine must wear laser safety goggles. Operating the laser engraver without goggles' protection is not allowed. Our machine comes with a pair of safety goggles, but additional laser safety goggles need to be purchased separately. The goggles should offer wavelength protection of 400-445nm(±5nm), an outer diameter of +5, and a minimum L-level L5.

4. Avoid placing flammable materials near the laser engraver. When the laser engraver is running, closely observe it and avoid leaving it unattended to prevent the engraved objects from catching fire. Set up the laser engraver in a fireproof area and ensure proper ventilation. If possible, we recommend purchasing a fire extinguisher and keeping it nearby the machine.

5. Ensure there is enough space when operating the laser engraver. Engraving certain materials may produce smoke, so it's important to use exhaust equipment to vent the smoke out.

6. When the machine is running, avoid letting your body or other objects touch the laser beam, as this may cause serious bodily injury or beam reflection. Do not touch the radiator, as it may still be hot even after the laser engraver has stopped working.

7. Do not allow children or teenagers to use the laser engraver alone, especially children under the age of 14. Adult supervision is required at all times.

8. The operating temperature range of the machine is -10°C to 40°C.

9. The use of the laser engraver carries a significant risk of fire. When operating the machine, please ensure that someone is available to handle any potential fire emergencies at all times.

1.2 Parts List

1.2.1 Machine

A Front Frame * 1

B Rear Frame * 1

C Left Y-Axis Frame * 1

D Right Y-Axis Frame * 1

E X-Axis Frame * 1

F Control Box * 1

G Screw M4X18*2

H L-Bracket * 4

I End Plate * 4

J Limit Switch * 1

K Limit Switch Mounting Plate * 1

L
Screw M5X8 * 4
Screw M5X14 * 15
Screw M5X25 * 5

M Screw M2.5X9 * 4

N M5X15X1 * 4 Washer

O Brush * 1

P
M2.0 Allen Key * 1
M2.5 Allen Key * 1
M3.0 Allen Key * 1

Q
Screwdriver * 1
Wrench * 1

R Laser Goggle * 1

S Support Foot * 4

T USB Cable * 1

U
Power Adapter*1

V
Power Cable * 1

W
Timing Belt * 2

1.2.2 Laser module and Others

DIY KIT mini series have 3 different modules, please refer to the product model you have purchased to confirm the list.

ALM-5BD**(5W)**
Laser Module * 1

Laser Shield * 1

Focus Assist *1

Thumb Screw * 2

ALM-10BD**(10W)**
Laser Module * 1

Air Assist Nozzle * 1

Laser Shield * 1

Air Pipe * 1

Focus Assist *1

Thumb Screw * 2

1.2.3 Consumable

Plywood * 1

Metal Card * 3

Cable Ties * 5

* The above images are for reference only. Please refer to the actual product.

01

Machine Assembly

Assemble the Frame

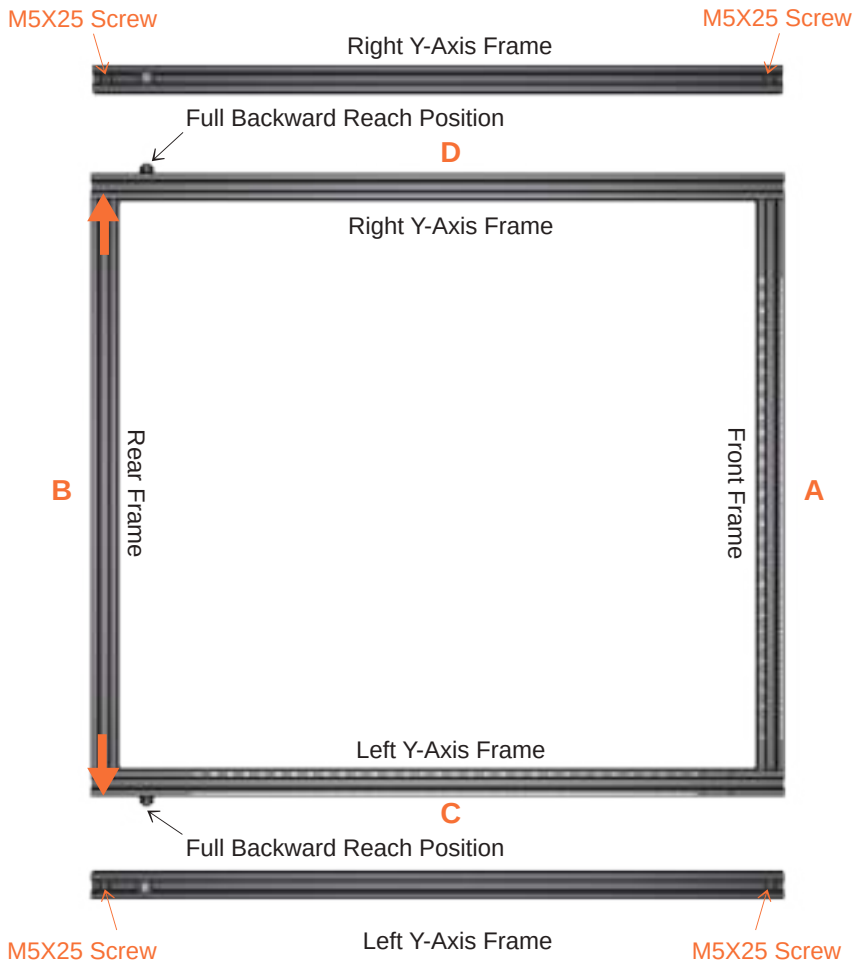

Step 1: Place the Front Frame and Rear Frame ends flush with the sides of the Left Y-Axis Frame. and Right Y-Axis Frame.
Secure using M5X25 Screws.

Assemble the X-Axis Component

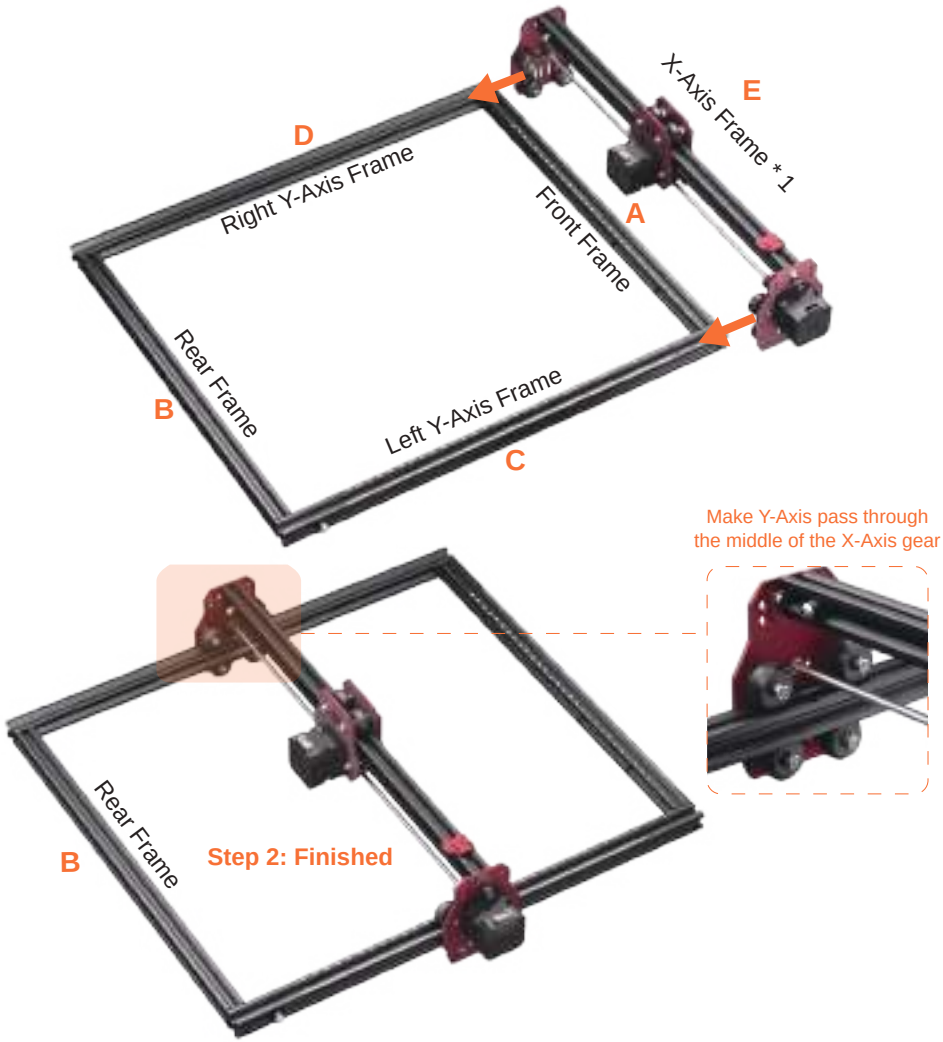

Step 2: Fit the X-Axis into the left Y-Axis Frame.
Fit the X-Axis into the right Y-Axis Frame.

Flip the Machine

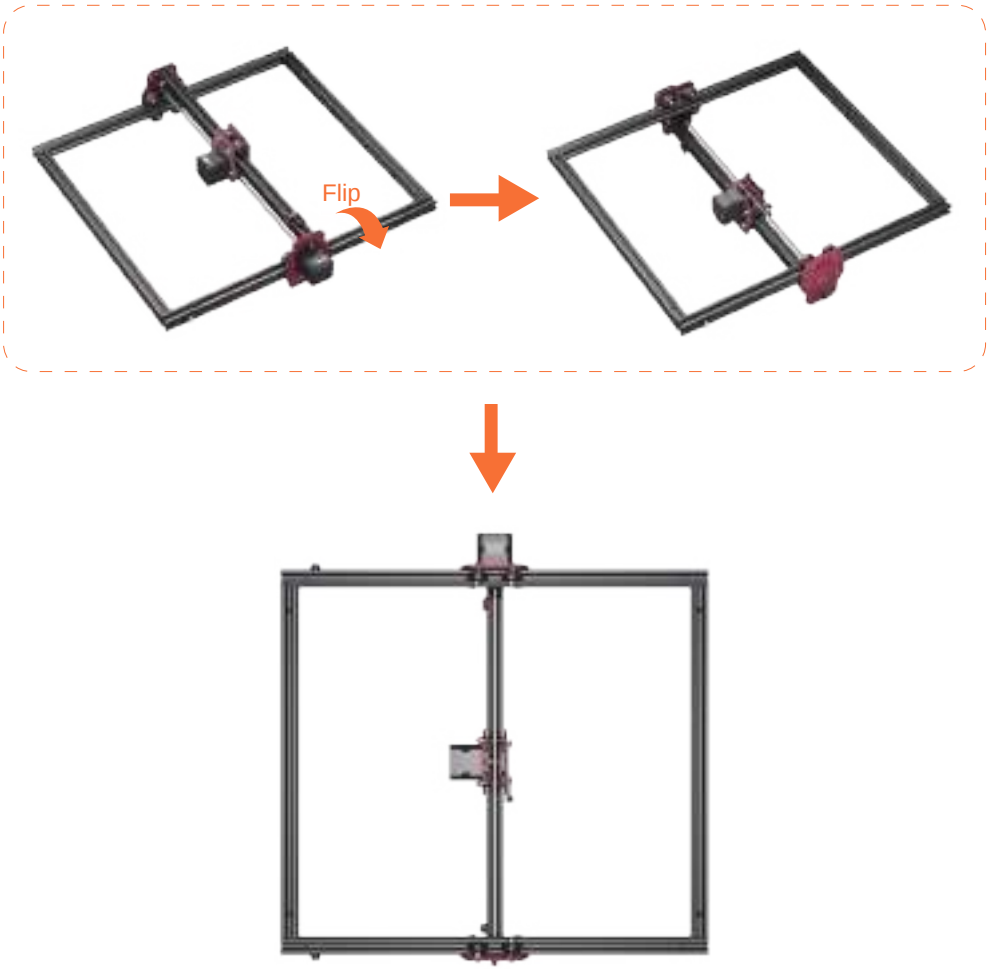

Step 3: Flip the machine upside down, with its bottom facing up.

Assemble the L-Bracket and the Support Feet

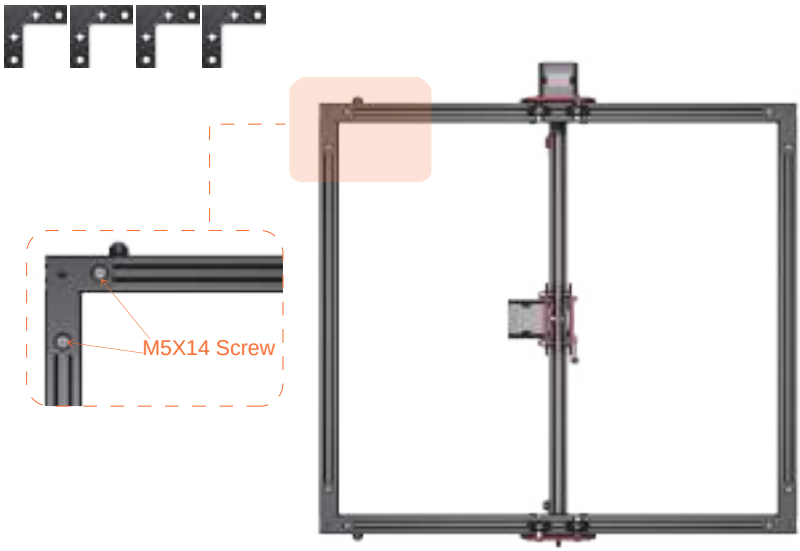

Step 5: Using the same method, install the remaining three L-Brackets.
Secure using M5X14 Screws.

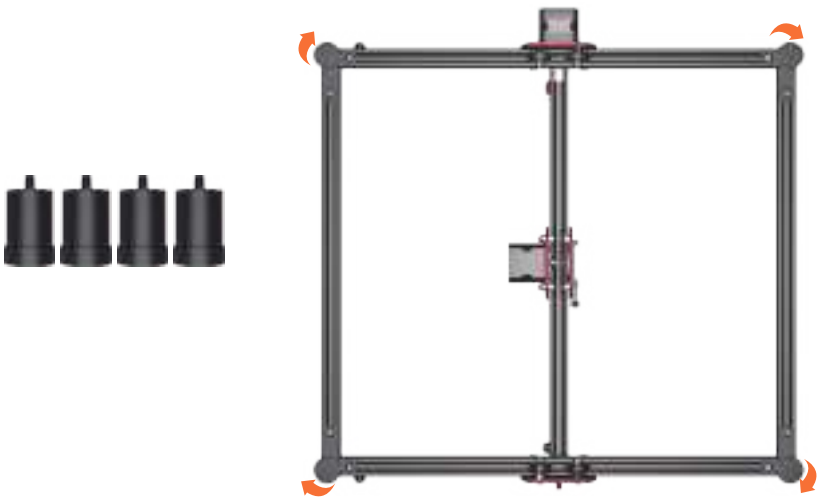

Step 6: Screw the Support Feet into the corresponding mounting holes on the L-Brackets in a clockwise direction.

Flip the Machine Again

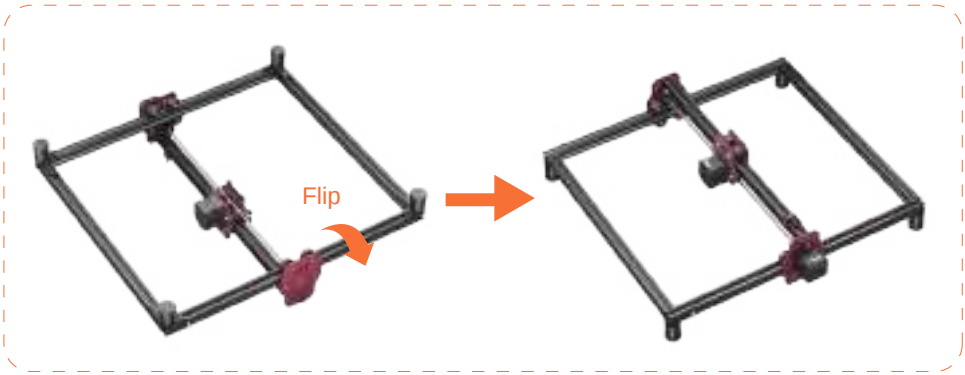

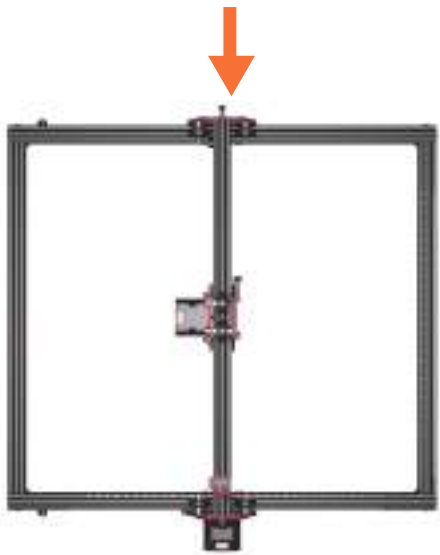

Step 7: Flip the machine upside down with the top side facing upwards.

Assemble the End Plate

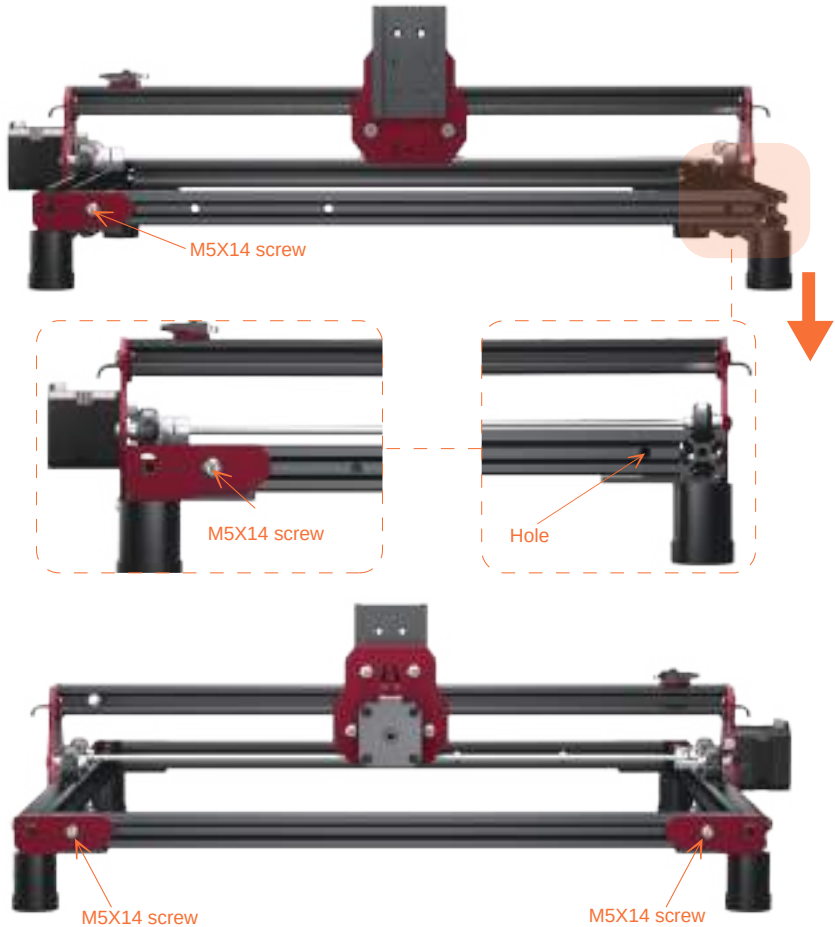

Step 8: Align the End Plate with this hole.
Secure using M5X14 screws.

Assemble the Belt

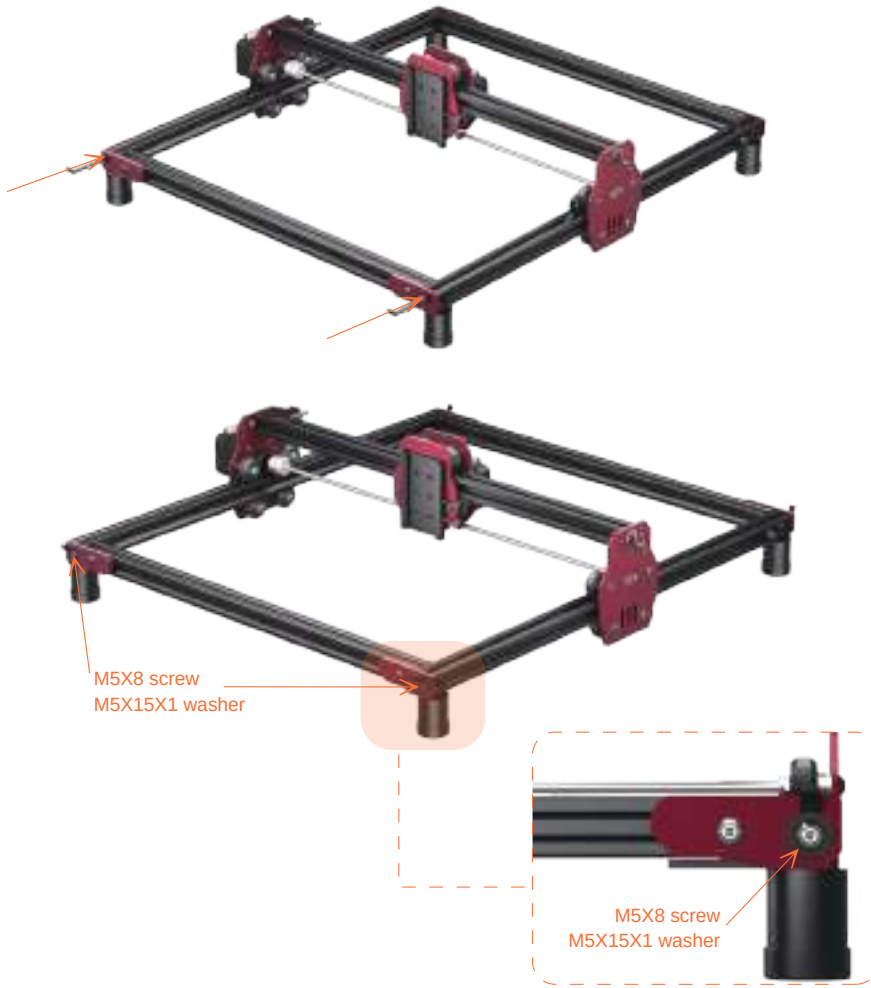

Step 9: Thread the belt through the hole in the direction of the arrow.
Secure the belt using M5X8 screws and M5X15X1 washers.

Assemble the Belt

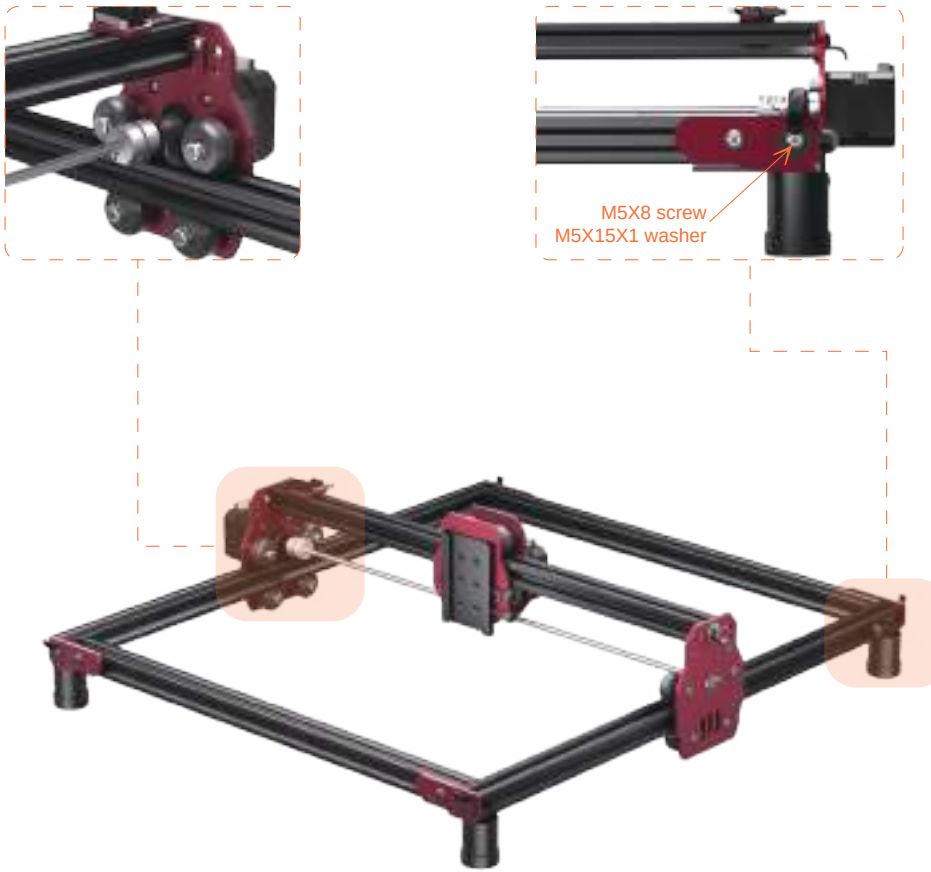

Step 10: The belt passes through the hole at the other end along the Y-Axis. Do not twist the belt, ensure it remains flat.
Secure it M5X8 screws and M5X15X1 washers.

Check the Tension of the Belt
Adjust Height of the Fixture

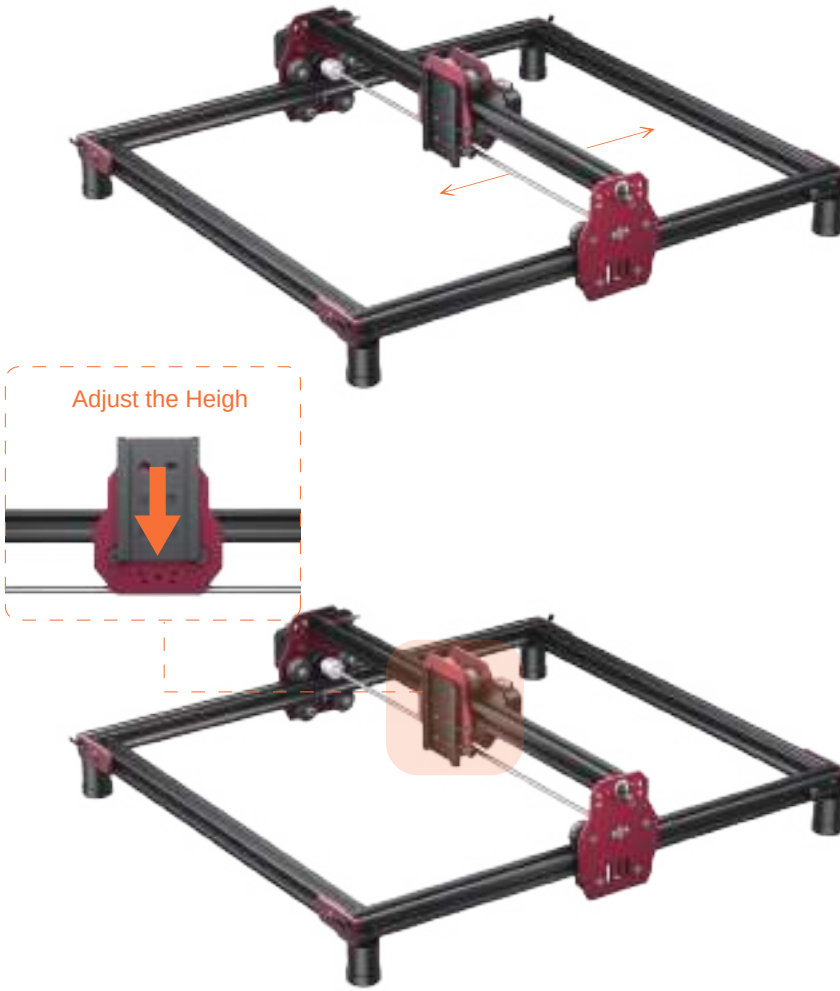

Step 11: Gently move the X-Axis by hand to check the belt tension. If it's too loose or tight, adjust accordingly. Please note that you can adjust the height of the fixture on the X-axis to meet your requirement by attaching screws at varying heights.

Assemble the Limit Switch

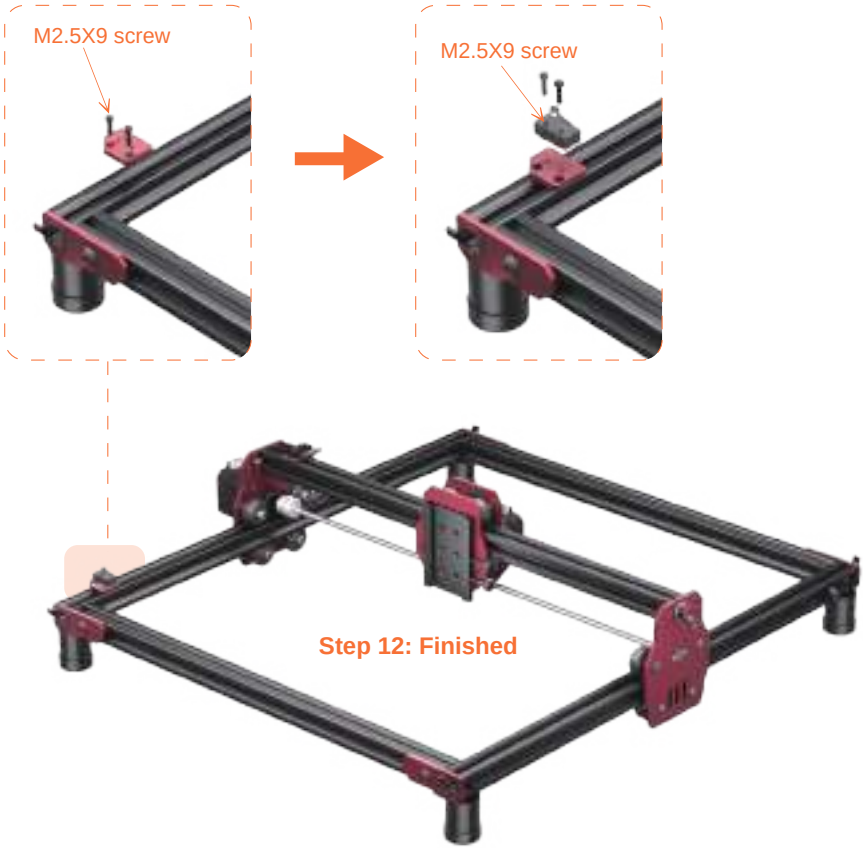

Step 12: Secure the Limit Switch Mounting Plate using M2.5X9 screws.
Secure the Limit Switch using M2.5X9 screws.

Assemble the Laser Module. Take 5W Laser Module as Reference.

Step 13: Insert the rear dovetail groove of the ALM-5BD(5W) Laser Module into the corresponding slot on the fixture.
Tighten the Thumb Screw clockwise to secure it in place.

Air Pump Connection ALM-10BD(10W)

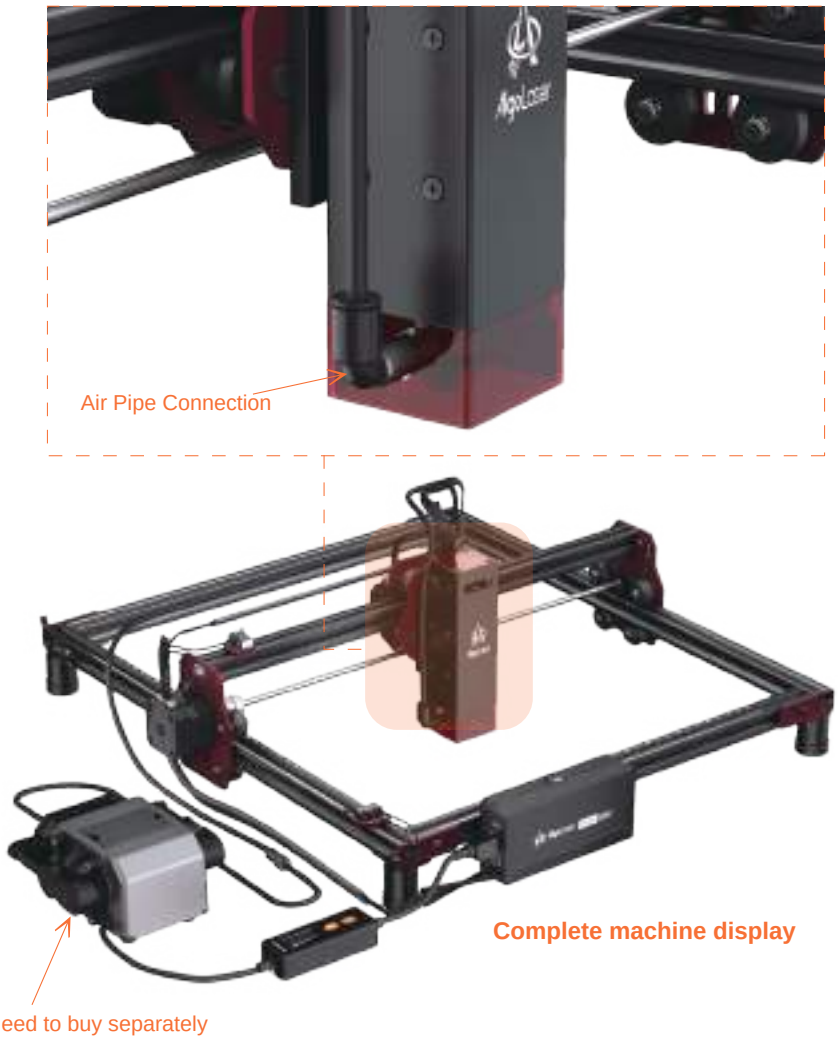

- Please note, the 10W laser module is sold without an air pump. And it is imperative to utilize it with an Air Pump for safe and optimal performance.

Assemble the Control Box Component

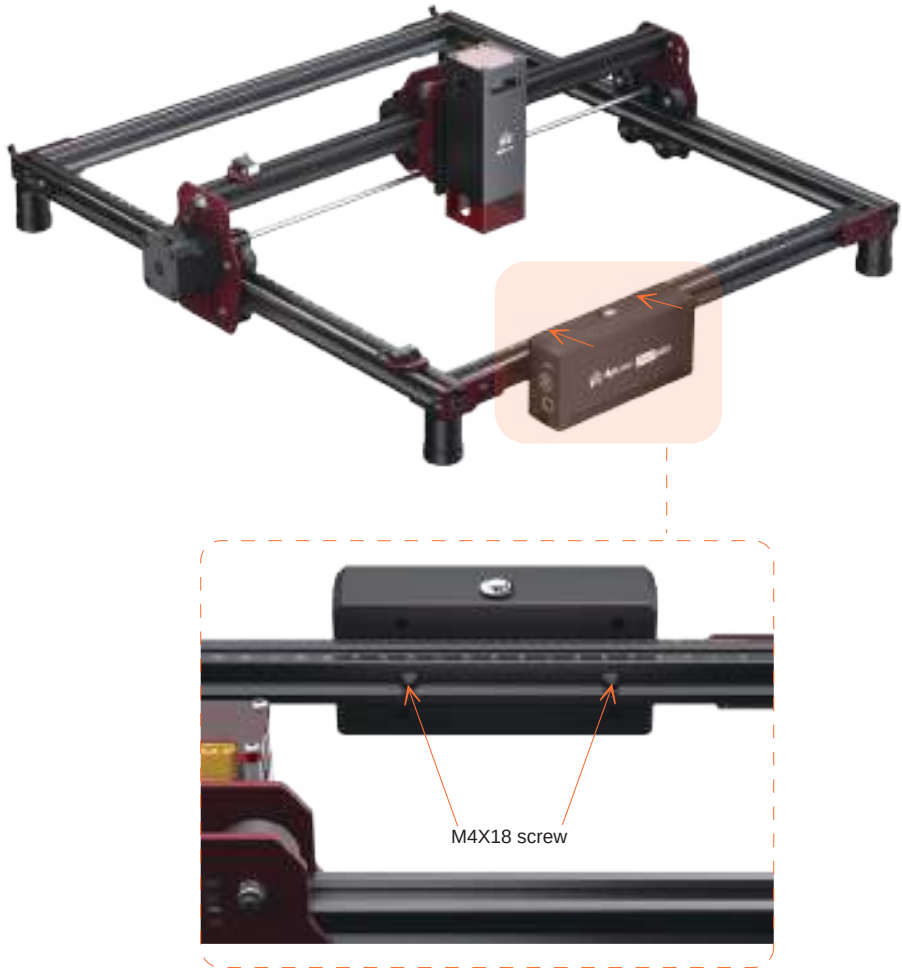

Step 19: Align the installation nut on the back of the Control Box with the mounting hole on the Front Frame.
Secure it by using M4X18 screws.

Assemble the Main Cable

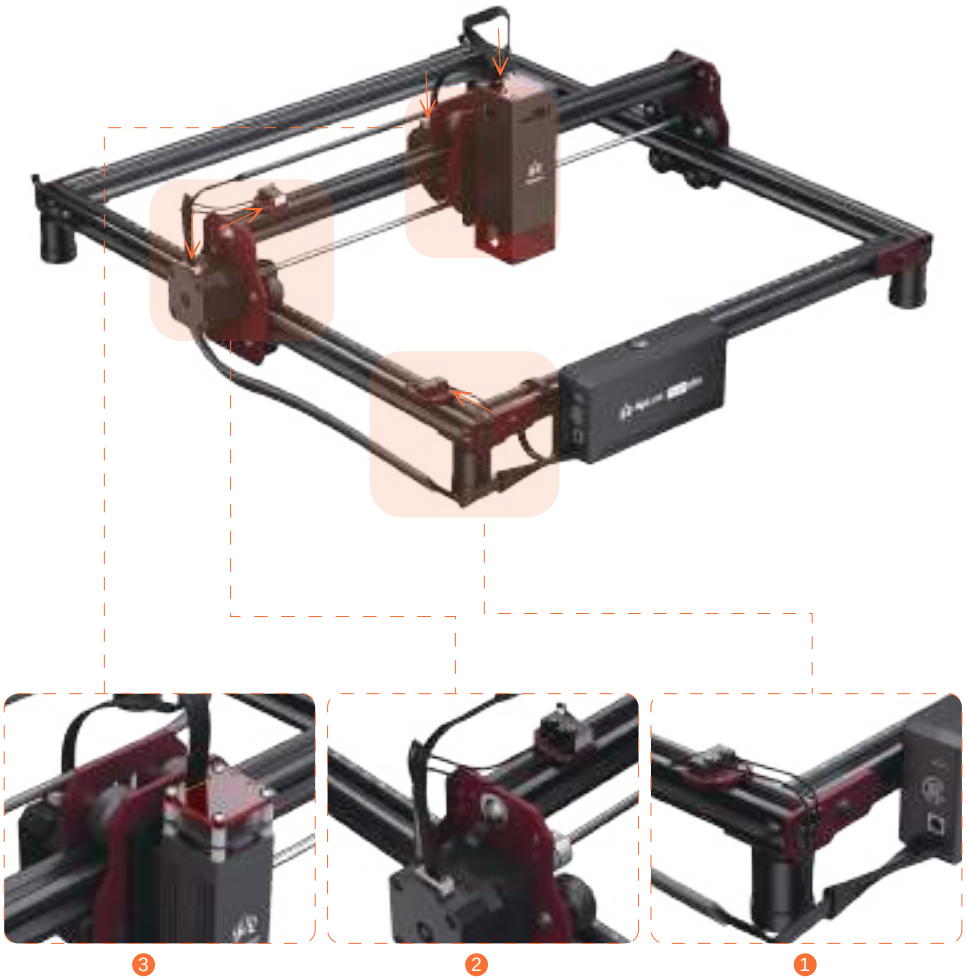

Step 20: Insert the cable connectors into the Limit Switches, Motors, and Laser Module Sockets in the sequence shown in the picture.

Secure the Main Cable

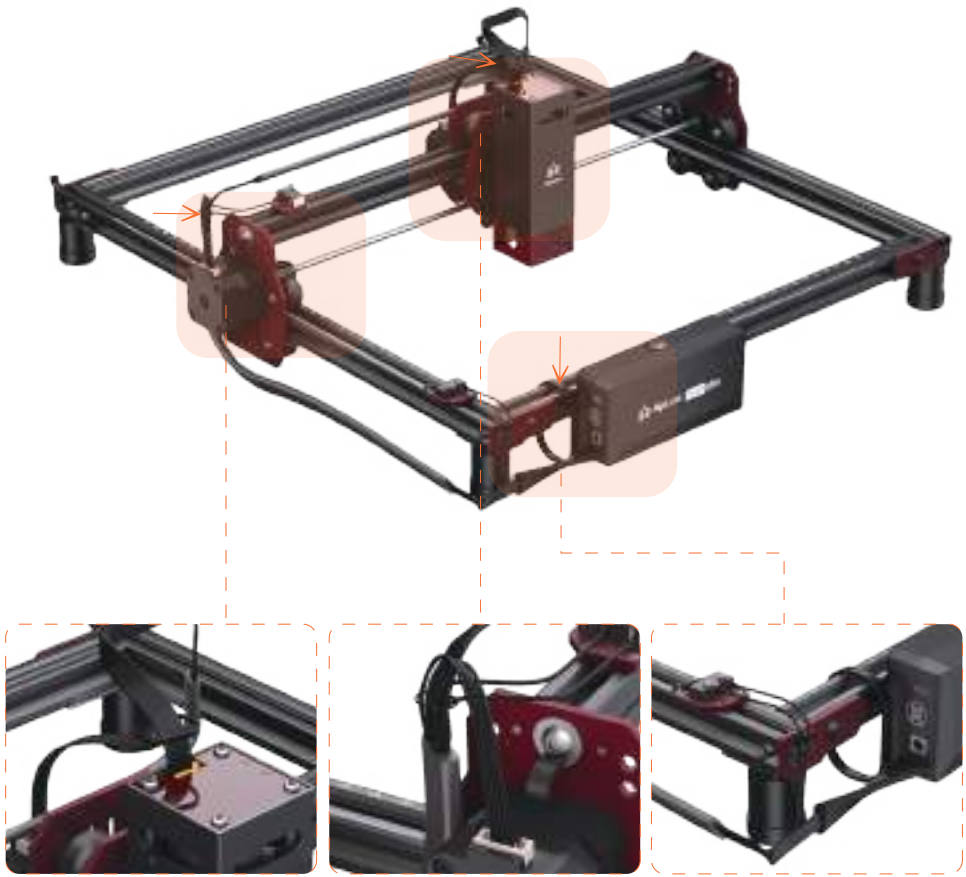

Step 21: Secure the cables in the appropriate positions by using zip ties.

How to Focus

Focus Assist

ALM-5BD(5W)

ALM-10BD(10W)

Step 22: Place the Focus Assist on the engraving material, ensuring it is positioned beneath the laser module. Gently slide the laser module downward until its edge lightly touches the circular disc on the bottom of the Focus Assist. Once in this position, tighten the Thumb Screw of the laser module to secure it. Finally, remove the Focus Assist from underneath the laser module.

Complete

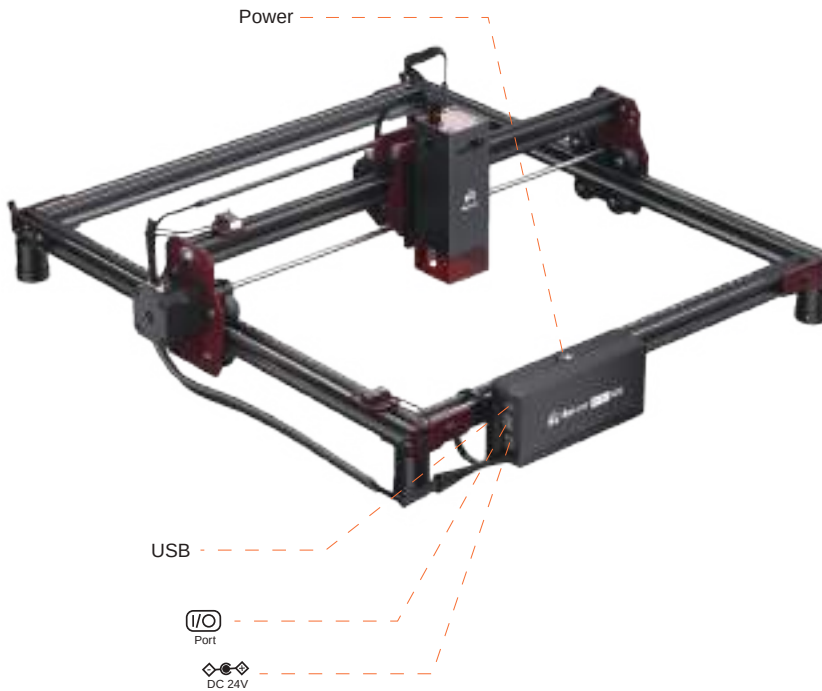

Step 23: The type-C to USB cable is used to connect the computer and machine. Ensure that the type-C end is plugged into the laser machine, while the USB end is plugged into the computer.

02

How to Use

3.1 Machine Status Explanation

Status	Action	LED Indicator Descriptions	Result
Power on	Hold the power button for >1500ms while powered on	he green indicator light changes from dim to bright in 1.5 seconds.	Machine powers on and quickly seeks the home position.
Power off	Hold the power button for >3000ms while powered on	The green indicator light changes from bright to dim in 1.5 seconds.	The device is shut down.
Enter upgrade mode	Perform the following operations when the device is not plugged into the 24 V power supply: Press and hold the power button, plug in the USB, wait for the power button to be lit in green, and then release the button. The ALDKM1 OTA USB flash drive is displayed on the computer screen. Drag the upgrade file to the USB flash drive, and then upgrade is performed automatically.	The device makes a "di" sound. The green indicator light flickers slowly three times and flashes once.	Success: Solid green light Failure: green light blinks
Enter network configuration	Press the power button 5 times in a row	The green indicator light stays in breathing light status for four seconds.	Machine can be configured for network settings via the app
Standby	Machine powered on and idle	Solid green light	Machine is in idle standby mode.
Working	Machine powered on and working	Solid green light	Machine is in motion and processing
Fault indicator	Machine has a fault and can't perform engraving motion	Solid green light	The machine cannot engrave there is a malfunction

3.2 Laser Indicator Light

Indicator Light	Main Status	Meaning	Note
Power	Green light	Power connected indication	Green light stays on when power is connected.
Laser	Blue light	Laser emission indication	Blue light stays on during laser emission

3.3 How to Connect the Machine to a PC

- Install the driver: Before installing the computer driver, please power on the machine and connect it to the PC using a USB cable.
  Then, choose the appropriate driver file based on your computer system and proceed with the installation.

Operating System	Operation	Phenomenon
WIN 7/WIN 8	zadig-2.5.exe	To install the driver, make sure the machine is powered on and connected to the computer via USB. The installation process can only be carried out when the machine is in the powered-on state and connected to the computer.
WIN 10/WIN 11	No installation required	
Mac	No installation required	

- To check the driver installation, follow these steps:

  ① Find the Device Manager on your computer.
  ② Navigate to the Ports section.
  ③ Disconnect the USB cable from the computer.
  ④ Observe that the new serial port disappears from the Ports section.
  ⑤ Reconnect the USB cable.
  ⑥ Verify that a new serial port appears, indicating successful driver installation.

- Connecting the machine

  ① Launch the LaserGRBL / LightBurn software.
  ② Select the COM port that corresponds to the one identified in step two of the installation process.
  ③ Click on the “Connect” button.
  ④ If a welcome message appears in the command box, it indicates a successful connection.

Notice:
If you use Lightburn for the first time, in order to operate logic with the Algola-Ser machine, be sure to choose the following two positions as the lower left corner.

Win7 & Win8 Driver Installation Tutorial

Resolution for Driver issues on ESP MCU Espressif CDC Device Error

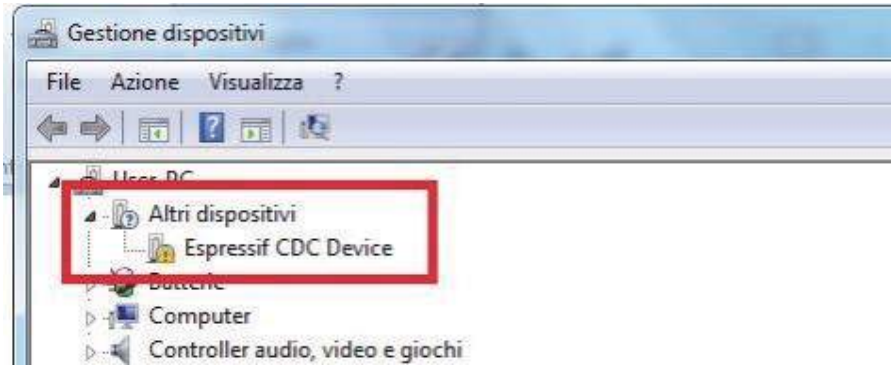

- Visit **https://zadig.akeo.ie/**
  Navigate lower on the page and click The download button

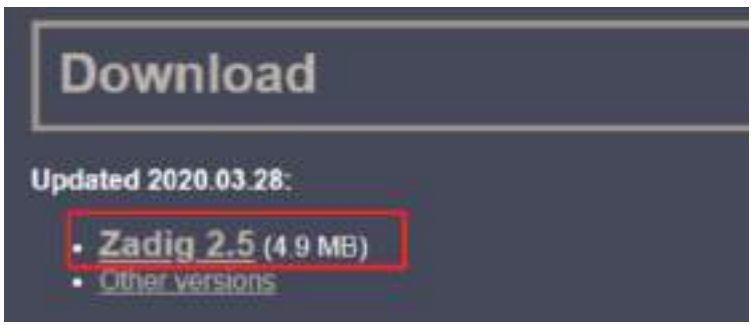

- Once open select List All Devices from the menu Options.

Wait for the refresh

- Select Espressif CDC Device (Interface 0) from the drop-down list.

- Select USB Serial (CDC) from the list of drivers available,
  click the Install Driver button, and wait for the installation to complete.

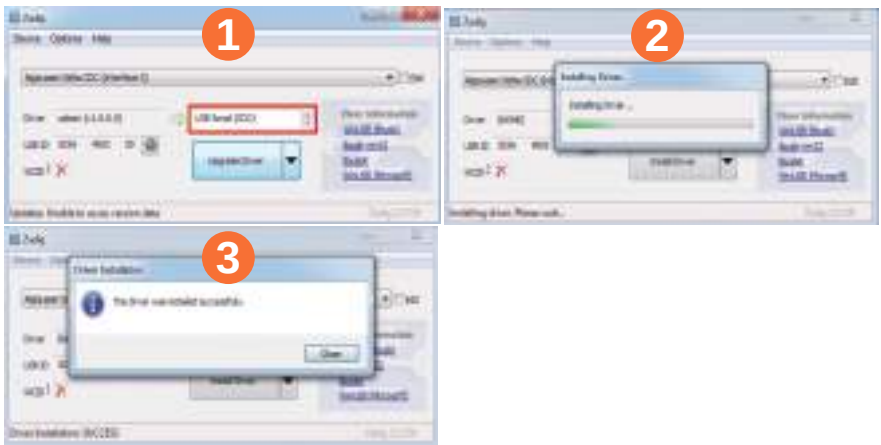

- When you're done, you can close the Zadig software
- The New AlgoLaser X CDC (Interface 0) (COMX) port in Device Manager.
  Note the COM number might be different in your machine

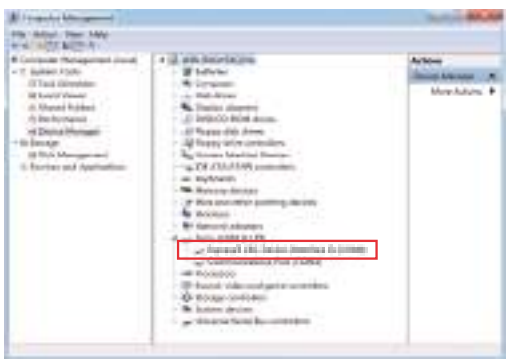

3.4 RR2/ARC Connection -- Operation Description

- Connection: Unplug the Y-axis motor wire from the Y-axis motor and connect it to the corresponding motor jack of YRR/YRC.
- Connect the control terminal: Use USB or other methods to connect the computer.
- LaserGRBL: Send "$22=0" in the “Type gcode here ”field

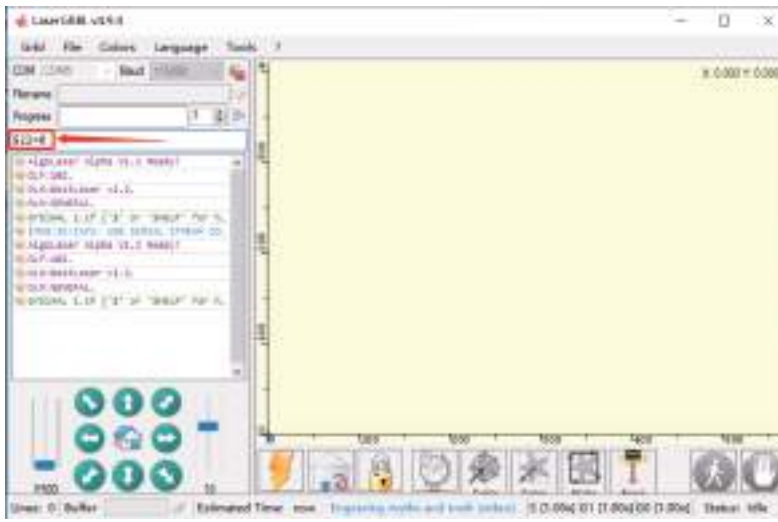

- LightBurn: Send the command "$22=0" in the "(Type Commands here)" field.

3.5 Connect the app to the device

Download the app (use your phone to scan the QR code below to download and install the app; or search for the app name "AlgoLaser" in the mobile app store.)

Google Play

App Store

① WiFi network configuration: (Note: Currently, Android phones need to be connected through AlgoLaser in Other.)
Follow the mobile app operation guide to connect the device to WiFi:
How to enter network configuration mode: Quickly press the device power button five times. The green indicator light of the device changes to a breathing light and makes a "di" sound.

② Compatibility mode: (Currently, only iPhone supports this mode.)
Follow the mobile app operation guide to connect the device to WiFi in compatibility mode.
How to enter compatibility mode: Quickly press the device power button three times. After the device makes a "di" sound, press and hold the power button until the device makes a "di" sound again.

①

②

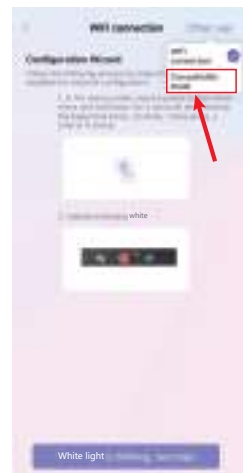

- **WiFi network configuration: (Note: Currently, Android phones need to be connected through AlgoLaser in Other.)**

① Connect to the LAN WiFi, open the app, and tap the card on the top of the homepage to enter the device connection page.

② Select Unconnected during the wizard. If the device has been connected to the network, wait for the device to be found.

③ For an Android phone, tap AlgoLaser in Other to connect to the network. For an iPhone, tap Dit kit mini to connect to the network.

④ Enter the WiFi name and password for the connection, and tap Next.

① ② ③ ④

⑤ Quickly press the device power button five times. The green indicator light of the device changes to a breathing light and makes a "di" sound.

⑥ After completing Step 5, tap Next to enter the next step. The device automatically enters network configuration mode.

⑦ Wait for the network configuration to complete, and then it automatically redirects to the homepage.

⑧ After the network configuration is completed, the basic device information is displayed on the top card.

⑤

⑥

⑦

⑧

- **Compatibility mode: (Currently, only iPhone supports this mode.)**

① Connect to the LAN WiFi, open the app, and tap the card on the top of the homepage to enter the device connection page.

② Select Unconnected during the wizard. If the device has been connected to the network, wait for the device to be found.

③ For an Android phone, tap AlgoLaser in Other to connect to the network. For an iPhone, tap DitKit Mini to connect to the network.

④ Enter the WiFi name and password for the connection, and tap Next.

① ② ③ ④

⑤ Select Compatibility mode in Other way in the top right corner of the page.

⑥ Quickly press the device power button three times. After the device makes a "di" sound, press and hold the power button. Then, the device makes a "di" sound again.

⑦ As shown in the figure, go to the mobile wireless LAN page to connect to WiFi.

⑧ Select the WiFi of ALDKM1_PROV_xxxx for connection.

⑤

⑥

⑦

⑧

⑨ Wait for network configuration in compatibility mode to complete.

⑩ If the connection is not completed, tap connect to redirect to the wireless LAN page.

⑪ If the WiFi connection is incorrect, select the configured WiFi for reconnection.

⑫ After network configuration in compatibility mode is completed, the basic device information is displayed on the top card.

⑨

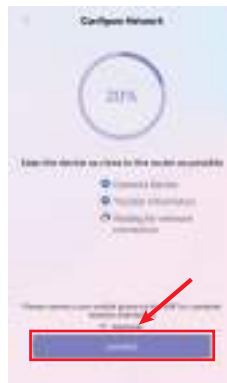

⑩

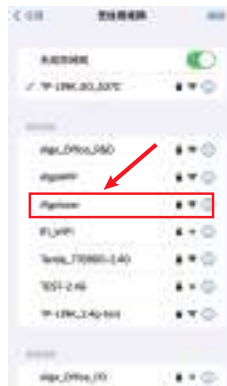

⑪

⑫

- Let’s import an image to try a full engraving.
- Click the “Library” to access the app's Library page. Select the pattern that you want to engrave.
- Enter the picture editing page, first-time users, directly skip and click NEXT for the next step.
- After accessing this page, adjust the image size for engraving. Select the boxed button in the figure and allow the machine to move slightly, determining the appropriate imaging size and location of the engraving trajectory.
- Click “Configure” and access to the configuration page.

- Set the parameters for engraving on the “Configure” page. There are plenty of pre-set parameters available for the AlgoLaser. Simply locate the appropriate preset and click to select it.
  a. “Algo 22W” boxed in red.
  a) Indicates a 22W laser module.
  b. “Scans” , “basswood” boxed in red.
  a) For engraving, choose the “Scans” mode.
  b) “Basswood”, choose the appropriate wood based on the specific situation, whether it be basswood or another suitable option.
  (Note: If there is a discrepancy between the engraving parameters and the desired effect, adjust the parameters accordingly.)
- Click “Start” in the upper right corner to proceed. Check if the laser module is focused. If not, refer to the manual for instructions on focusing.
  If already in focus, click “Checked” to the next step.
- Prompt for selecting the starting point of the laser module engraving: click “Start” for the next step the first time.

• Wait for the image conversion to finish.

• Click the "Run" button to start engraving.

3.6 FAQ

No response from the machine when being powered on.

- No power supply: Please check the socket and switch as well as the machine power socket to ensure that they have been correctly plugged with normal power supply.

It cannot be connected to computer.

- USB cable not connected: Please check the USB data cable interface on the machine and computer to ensure it's correctly plugged.The USB interface on the front panel of some desktop computers is invalid, it's better to connect to the interface on the back.
- Driver not properly installed: Install the driver according to the instructions. After the installation is done, the computer will recognize the device as a serial port,which means the hardware connection is OK.
- Other special problems:Pull out the USB data cable and power cable, keep the machine power off for 5 seconds and then try the connection once again.

No response from the phone APP when being connected to the machine.

- Wrong Bluetooth connection: Make sure it's connected to the Bluetooth released by the machine. Please read “App Connection” in the User Manual for details.
- Incompatibility: In the case of abnormal connection due to incompatibility of newly-released phone or upgraded system, please contact our customer service with the screenshot of phone configuration so as to get technical support as soon as possible.

Shallow engraving effect or no traces.

- Inaccurate focus: Refer to the "Focus Adjustment" in the User Manual to make the correct focus.
- Engraving speed: Too fast speed is due to short burning time.Please read the“Engraving Parameters" in the Manual to readjust the parameters.
- Photo color is too light: The photo added should be clear. If the line is too thin or the color is too light, the engraving effect will be directly influenced.
- Position of object to be engraved: If the object is placed obliquely, the focal length of laser is fixed,so the object should be placed horizontally in parallel to the machine; otherwise, the inaccurate focal length will result in bad engraving effect.

Offline engraving unexpectedly stops

- The photo is not completely downloaded when being connected to computer, please download the photo once again.

FCC Compliance Statements

This device complies with Part 15 of the FCC Rules. Operation is subject to the following two conditions: (1) this device may not cause harmful interference, and (2) this device must accept any interference received, including interference that may cause undesired operation.
Caution: Changes or modifications not expressly approved by the party responsible for compliance could void the user's authority to operate the equipment.

Note: This equipment has been tested and found to comply with the limits for a Class B digital device, pursuant to Part 15 of the FCC Rules. These limits are designed to provide reasonable protection against harmful interference in a residential installation. This equipment generates, uses and can radiate radio frequency energy and, if not installed and used in accordance with the instructions, may cause harmful interference to radio communications. However, there is no guarantee that interference will not occur in a particular installation.
If this equipment does cause harmful interference to radio or television reception, which can be determined by turning the equipment off and on, the user is encouraged to try to correct the interference by one or more of the following measures:
-- Reorient or relocate the receiving antenna.
-- Increase the separation between the equipment and receiver.
-- Connect the equipment into an outlet on a circuit different from that to which the receiver is connected.
-- Consult the dealer or an experienced radio/TV technician for help.

ISED Compliance Statements

This device contains licence-exempt transmitter(s)/receiver(s) that comply with Innovation, Science and Economic Development Canada's licence-exempt RSS(s). Operation is subject to the following two conditions:
(1) This device may not cause interference.
(2) This device must accept any interference, including interference that may cause undesired operation of the device.
This equipment complies with IC RSS-102 radiation exposure limits set forth for an uncontrolled environment.

L'émetteur/récepteur exempt de licence contenu dans le présent appareil est conforme aux CNR d'Innovation, Sciences et Développement économique Canada applicables aux appareils radio exempts de licence. L'exploitation est autorisée aux deux conditions suivantes :
(1) L'appareil ne doit pas produire de brouillage;
(2) L'appareil doit accepter tout brouillage radioélectrique subi, même si le brouillage est susceptible d'en compromettre le fonctionnement.
Cet équipement est conforme aux limites d'exposition aux radiations IC CNR-102 établies pour un environnement non contrôlé.

RF Exposure Compliance

This equipment complies with FCC/IC RSS-102 radiation exposure limits set forth for an uncontrolled environment. This equipment should be installed and operated with minimum distance 20cm between the radiator and your body. This transmitter must not be co-located or operating in conjunction with any other antenna or transmitter.
Cet équipement est conforme aux limites d'exposition aux radiations IC CNR-102 établies pour un environnement non contrôlé. Cet équipement doit être installé et utilisé avec une distance minimale de 20cm entre le radiateur et votre corps. Cet émetteur ne doit pas être colocalisé ou fonctionner en conjonction avec une autre antenne ou un autre émetteur.

AlgoLaser

Follow us! **#AlgoLaser**

AlgoLaser

AlgoLaser

AlgoLaser

AlgoLaser

Official AlgoLaser User Group

https://algolaser.com/support/

MADE IN CHINA

https://algolaser.com/support/