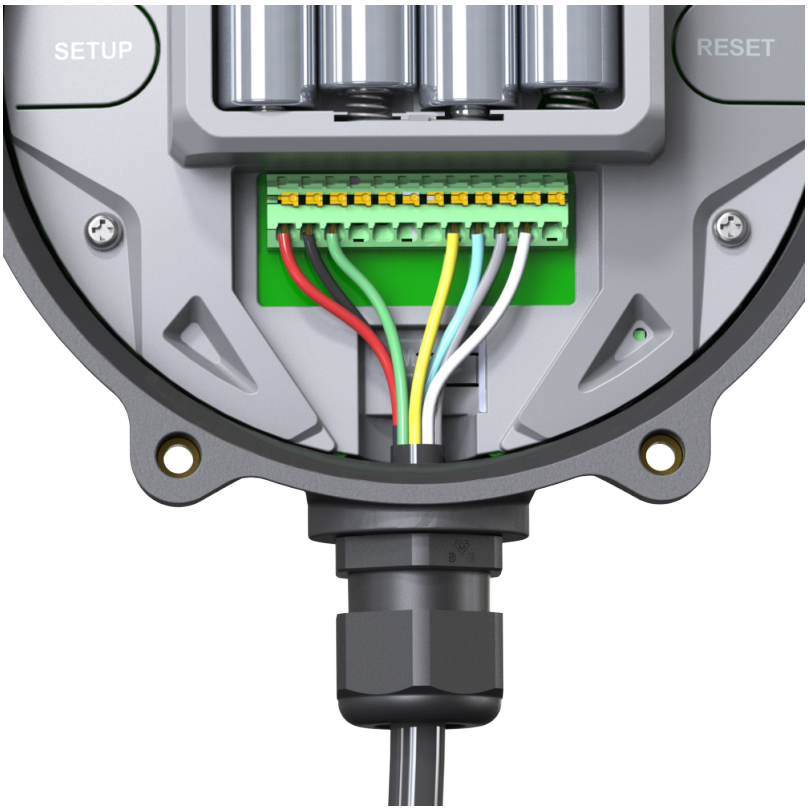

Figure 2.16. Wiring example with a sheathed cable

To ensure IP rating is retained, a sheathed cable with diameter suitable for use with the cable gland insert should be used. Three cable gland seals are supplied as specified in the table below. The gland with the single hole should be used when a single cable is required; the gland with two holes should be used where two cables are required etc. Cable seals are manufactured using NBR (Nitrile Butadiene Rubber) and are resistant to oils and biological oils, solvents and most industrial chemicals. Always check the suitability of the cable gland insert with all chemicals found in the operating environment.

Part No	No. holes	Hole diameter	Cable	
A	1	11mm	6-11mm	
B	2	5mm	3-5mm	
C	3	4mm	2-4mm	

2.8 Initial setup

Initial setup can be performed using the integrated web-server using any Wi-Fi enabled phone, tablet or computer. Once the device is connected to a network, configuration can be performed remotely using the in-built webserver or via the Senquip Portal.

Note For volume opportunities, devices can be pre-configured to connect immediately to a network; please contact Senquip to discuss this option.

With the cover open, two push-button switches, setup and reset, and two LEDs network (orange) and status (green) are available. The switches and LEDs are used to configure the device.

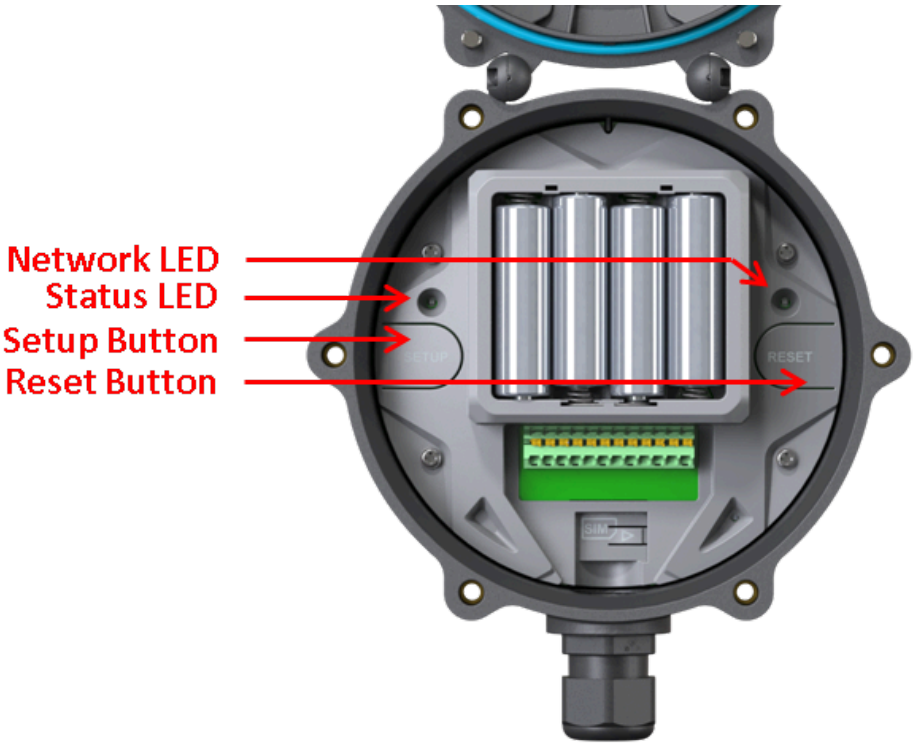

Figure 2.17. Buttons and LEDs for setup

The green status LED and orange network LED indicate the current state of the ORB. These LEDs are only active if the lid is open. When the lid is closed, the LEDs will remain off to conserve energy. A summary of LED function is given in the table below.

Note During normal operation, the LEDs will be off when the device is sleeping or hibernating and will not turn on when the lid is opened until the next measurement interval.

Status LED (Green)	Network LED (Orange)	Meaning
Off	Off	Device is sleeping or lid is closed
Flash (1Hz)	Off	Setup Mode
On	Flash (1Hz)	Device has been configured, but no network connection
On	On	Network connection via Wi-Fi or 4G LTE
Fast Flash	Fast Flash	Factory reset in progress
Off	Fast Flash	Firmware update in progress
Slow Flash	Off	Pre-charge mode

Note The LEDs turn on when the lid is opened because an internal sensor detects light. If the lid is opened in dark conditions, the LEDs will not turn on.

Firmware Updates The latest firmware version and a description of changes to firmware can be found in the Senquip Device Firmware Changelist. Updating to the latest firmware can be performed from the Senquip Portal by selecting *Settings* and *Update* and then pressing the *Update Firmware* button. To update to a specific firmware version, enter the firmware number as shown in the figure below and press *Update Firmware*. During the firmware update, the orange network LED will flash fast. After a firmware update, the LEDs may freeze or remain off for a few minutes. This is normal behaviour and occurs shortly after firmware update when the ORB is encrypting the memory.

The firmware update can be seen in the command queue and has been received by the device when the status shows as success. Receipt of the firmware update by the device does not always mean that the update is correctly applied. To ensure that the update has occured, check the firmware number in the *Device Info* widget on the device Portal page. You may need to refresh the browser window.

Factory Reset To perform a factory reset, press and hold the *Setup* button. While holding the *Setup* button, press and release the *Reset* button. The green status LED and orange network LED will begin to flash fast. Continue to hold the *Setup* button down for 10 seconds. After 10 seconds, the LEDs will stop flashing at which point the *Setup* button can be released. All settings will be changed back to the factory state and the ORB will restart. Any firmware updates made to the ORB will be preserved.

Warning Returning the ORB to factory defaults will remove all network settings, rendering remote updates impossible.

Passwords The ORB is shipped, pre-loaded, with a random password that prevent unauthorised connection to the ORB's Wi-Fi hotspot and prevent access to the ORB's built in webserver. The default passwords are printed on a label that can be found under the ORB cover.

Figure 2.18. The default passwords can be found under the lid

The label contains two sections:

- General information about the ORB such as the part number, ORB identification number, Wi-Fi SSID and the IP address of the webserver
- A removable section that contains the part number, ORB identification number, webserver password (setup password), Wi-Fi SSID and Wi-Fi password. This section should be removed and stored securely. It is recommended that the passwords be changed as soon as possible using the ORB's webserver or the Senquip portal.

Figure 2.19. Label with general information and passwords

Take note of the Wi-Fi and setup passwords as you will need them to continue with the setup. In the example above, the ORB identifier is *DE9032030*, the Wi-Fi password is *hjg3iplg* and the setup password is *QvjSF3jk*.

Setup Mode Setup Mode allows initial customer configuration via the integrated web-server. This mode is enabled when the *Setup* button is pressed for more than 2 seconds.

In setup mode, an integrated Wi-Fi Access Point (AP) is enabled through which the installer can access the ORB's built in web-server. The web-server allows for initial setup using a web based interface, similar to setting up a home router. In this mode, a user can connect to the ORB using any computer, tablet or mobile phone that has Wi-Fi and is loaded with a browser. After the ORB is connected to a network, changes can be made remotely using the Senquip Portal.

Note The Senquip ORB Wi-Fi Access Point is 2.4GHz only

If connected to external power, the ORB will remain in setup mode as long as the lid is open. If no external power is available, the ORB will enter sleep mode after 10 minutes of no activity. To re-enable setup mode, press the *Setup* button again for 2 seconds. Setup mode will be exited once the lid has been closed for more than 10 seconds.

Note A shadow over the light sensor can make the ORB exit setup mode. It is easier to configure the ORB from the Senquip Portal once a network connection has been established.

To connect to the ORB, search for available Wi-Fi networks on your Wi-Fi enabled device. The ORB will advertise itself as *ORB-xxxxx*, where xxxxx represents the last 5 digits of the ORB device identifier. The device identifier as well as password and other information can be found on a sticker under the lid of the ORB. In the example below, using an Android phone, the ORB can be seen to be advertising itself as *ORB-32030*, where *32030* are the last five digits of the ORB device identifier.

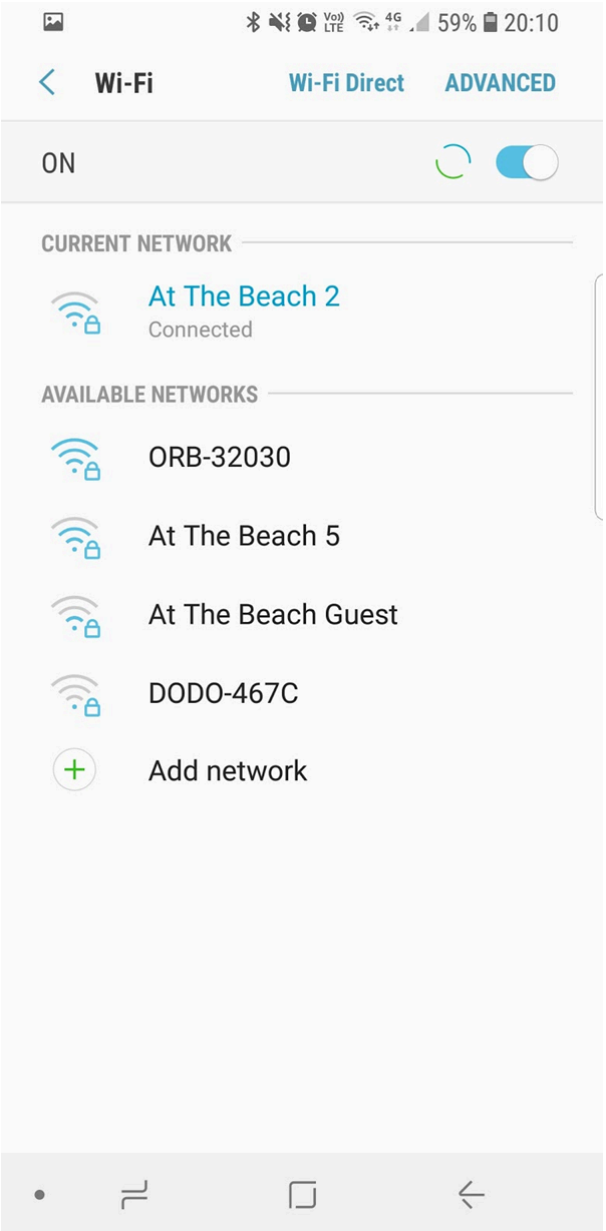

Figure 2.20. Search for Wi-Fi networks

Select the ORB's advertised Wi-Fi network name, *ORB-32030* in this example, and enter the Wi-Fi password found under the lid, *hjg3iplg* in this example. When you press connect, your Wi-Fi enabled device will connect to the ORB Wi-Fi hotspot. Being connected to the ORB Wi-Fi hotspot does not allow you to view or change any data yet. To view and change data, you need to login to the ORB webserver.

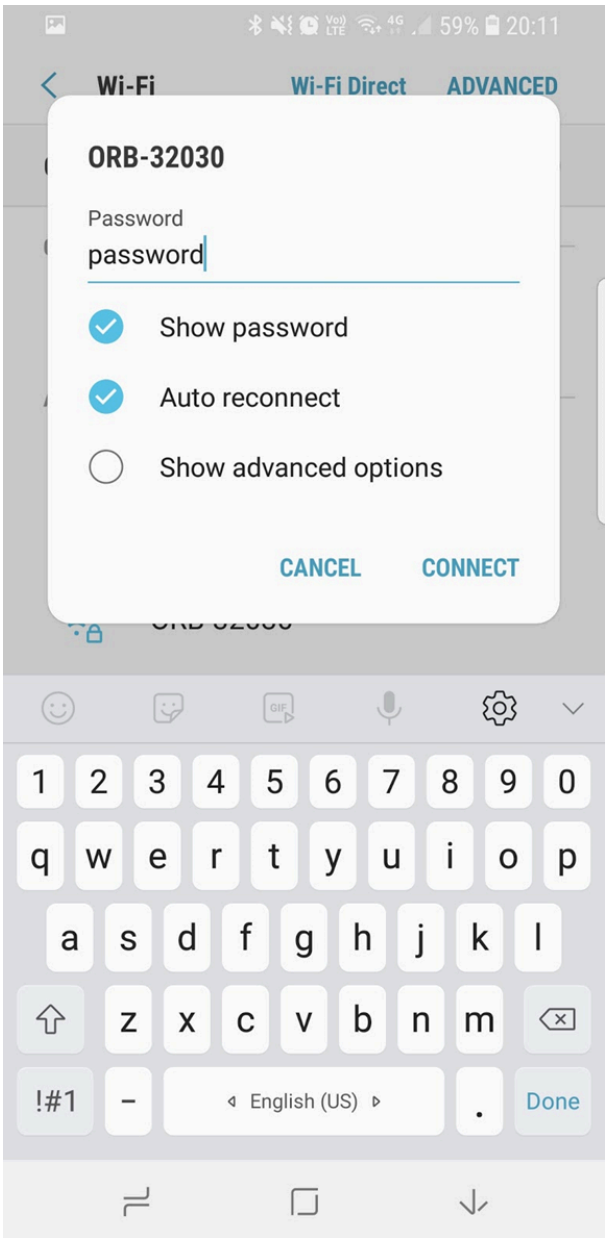

Figure 2.21. Enter the Wi-Fi password

Once you are connected to the ORB's Wi-Fi hotspot, to access the ORB's web-server, open your preferred web-browser (Senquip recommends Chrome) and in the address bar, type *192.168.4.1* and press enter. Your browser will open the ORB's web-server password entry page. For username, type in *admin*; the setup password can be found on the sticker under the lid of the ORB. In the example above, the password is *QvjSF3jk*. Remember to change this password as soon as possible using the *Admin* tab in the web-server.

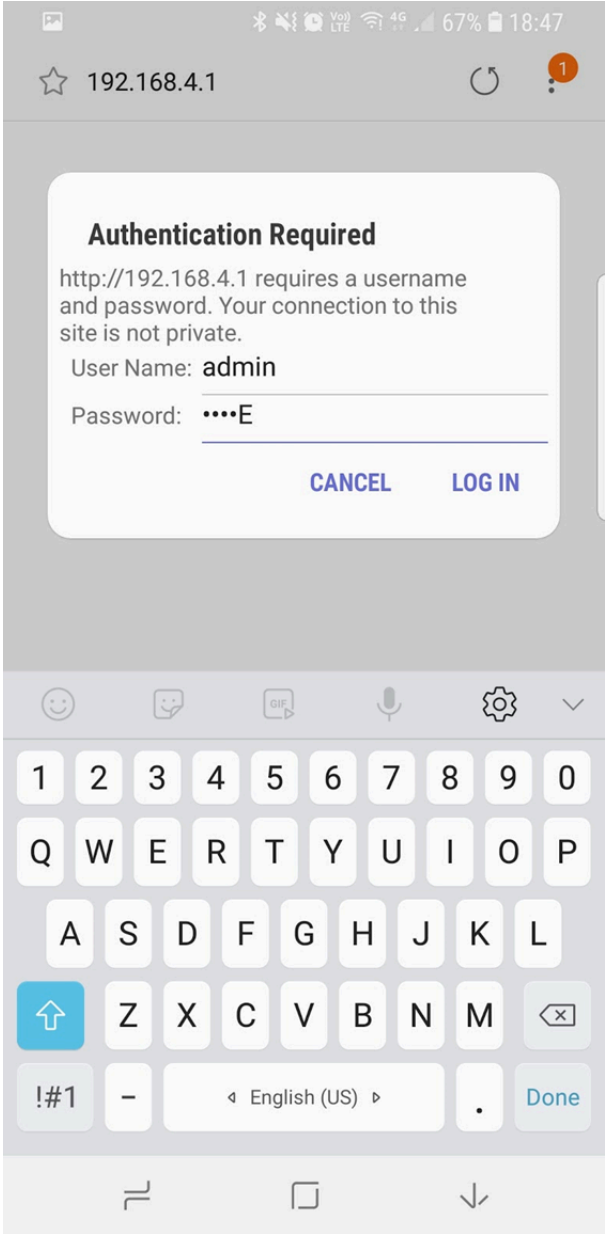

Figure 2.22. Accessing the web-server

Note Performing a factory reset will reset the passwords to their defaults as found under the lid.

If you have entered the username and password correctly, you will now have access to the ORB's web-server. From the web-server, you will be able to view current data, make configuration changes and perform software updates.

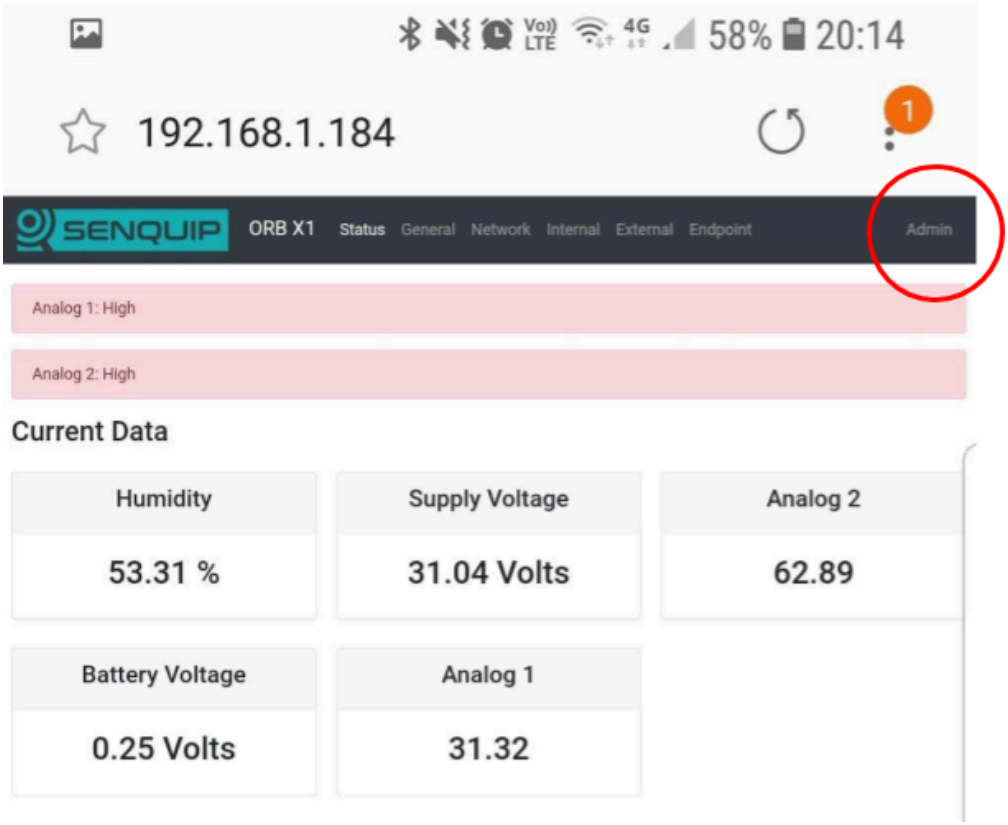

Figure 2.23. Browsing the web-server

The following pages are available on the web-server:

Page Name	Function
Status	View the current status of all enabled modules
General	Configure general, timing and power options
Network	Settings to attach the Senquip ORB to a Wi-Fi or 4G LTE network
Internal	Configure all sensors that are internal to the Senquip ORB
External	Configure sensors that are connected to the external interface
Endpoint	Configure the Senquip ORB to send data to a remote server such as the Senquip Cloud
Events	Set email and SMS notifications when alerts occur
Update	Update firmware on the Senquip ORB
API	Configure the Senquip API to communicate with third party servers
Admin	Save device settings to a file to enable easy cloning of devices

Warning Remember to change the web-server password as soon as possible using the Admin tab found on the top right, as circled in red in the above image.

Chapter 3

Power Supply

The Senquip ORB has been designed to offer maximum flexibility in terms of power supply requirements and is able to run off permanent power, solar (with internal rechargeable lithium battery) or replaceable AA batteries. Low power design techniques ensure the longest possible run-time when operating off batteries.

3.1 Permanent power

A wide input range of 10-75V operation allows for use in automotive, industrial and telecoms applications. System power is backed up with an internal lithium polymer rechargeable battery in the event of power outages. Supply voltage is monitored to a resolution of 100mV and can be reported on a periodic basis if enabled.

The supply voltage input is reverse polarity protected and is resistant to damage from static and surge.

The ORB can be used with a solar panel as a source of power. When running on solar, the panel needs to be able to collect enough energy during sunlight hours to power the ORB through the night and on cloudy days. Keep in mind that solar panels will tend to get dusty and so should be over-rated to avoid regular maintenance. A typical 12V solar panel used to power the ORB along with it's specifications is shown below:

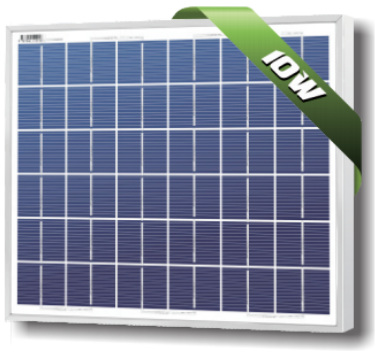

Figure 3.1. Typical ORB solar panel

Parameter	Specification
Maximum power	10W
Voltage at maximum power	17V
Current at maximum power	0.56A
Open-circuit voltage	21.6V

Short-circuit current	0.68A
Width	357mm
Height	302mm

The above solar panel was tested with an ORB measuring and reporting 2 input voltages, ambient temperature, ambient pressure and thermocouple temperature at an interval of 5 minutes. To conserve energy in what was a fixed location test, GPS location was measured every 20 base intervals or 100 minutes. The results were transmitted over 4G LTE or Wi-Fi at 5 minute intervals. The solar panel was sufficient to power the ORB.

3.2 Replaceable AA batteries

In remote applications, where only low frequency measurement is required, the ORB can be powered by four AA batteries. Either 1.5V alkaline, 1.6V lithium or 3.6V lithium AA batteries can be used. Alkaline batteries have very low energy density and are not recommended. Lithium-thionyl Chloride batteries have a very low maximum discharge rate and are also not recomended. Where high quality lithium batteries are used, the ORB can run off batteries for up to 10 years in sleep mode. Battery life of 1 to 2 years should be expected in real applications where the ORB has been configured for low power operation.

Figure 3.2. High capacity batteries

The AA batteries are user replaceable and the ORB is protected against incorrect battery insertion. Correct battery orientation is clearly marked in the battery compartment.

The AA battery voltage is monitored to a resolution of 100mV and can be reported on a periodic basis if enabled.

3.3 Internal rechargeable battery

An Internal 3.7V, 1800mAh rechargeable Lithium Ion Polymer (LiPo) battery is charged from system power, making the device ideal in applications where power is intermittent such as solar. The LiPo battery can be fully recharged within 4 hours of system power being connected.

If the internal LiPo has been allowed to completely discharge; when power is first applied to the ORB, the battery will go into a pre-charge mode where the battery is charged to a minimum level before the ORB starts operating. Pre-charge mode is identified by a slow flash on the green LED with the orange LED off.

An internal protection circuits prevent damage to the LiPo battery in the event of a short circuit or due to excessive discharge. A temperature monitoring circuit terminates LiPo battery charging at temperatures below 0 °C and above 45°C. It is recommended that the LiPo battery be replaced after three

years of use or more regularly if the device routinely operates in extended temperatures. The LiPo battery should only be replaced by a Senquip replacement part and should only be installed by a suitably trained technician.

System voltage which is closely related to the LiPo battery voltage is monitored to a resolution of 100mV and is reported at the base interval.

State	AA Batteries	External Power	Comment
LiPo charge threshold	3.7V	4.108	The voltage below which a charge cycle is initiated
LiPo precharge voltage threshold	3.6V	3.6V	Slow flash on green LED, device not operational below this value
LiPo charging voltage	4.208V	4.208V	
LiPo charging current	150mA	300mA	
LiPo charge current termination	128mA	128mA	Charge terminates when charge current below 128mA and battery voltage is above the charge threshold
System shutdown	3.6V	3.6V	Device enters freight mode
Minimum input voltage for charging	4.1V	10V	
Maximum current from charge source	150mA	500mA	Not suitable for Lithium-thionyl Chloride batteries
Safety timer	8 hours	8 hours	Time after which charging will cease
Charge temperature range	0 to 45°C	0 to 45°C	Charging will terminate outside of this range

3.4 Power consumption

The ORB has been designed to be suitable for use in applications where permanent power is not available and solar and or batteries are the only source of energy. Factors affecting power consumption include the rate at which sensor measurements are made, the number of transmissions of measured data and which internal and external sensors that are connected.

Broadly, the state of the ORB can be divided into three modes: sleep, measurement and transmission. Sleep mode is by far the lowest power state where most internal sensors are turned off and the device is waiting for the next measurement period. During a measurement period, the sensors are turned on and power consumption increases dramatically. The actual power consumed during a measurement phase depends on the power requirements of connected sensors and the duration for which they are turned on. For instance, a 4-20mA pressure sensor will, by default, draw between 4mA and 20mA of current when turned on. The sensor will clearly use less energy when measuring 4mA than when measuring 20mA. Transmission is the most energy intense operation performed by the ORB. During transmission, the Wi-Fi and or 4G LTE radios are turned on and data is transmitted. Limiting the length of radio transmissions has a significant impact on energy consumed by the ORB.

The following strategies can be used to limit power consumption, which will be particularly useful in battery powered applications:

- Limit the rate at which measurements are taken - if the parameter being measured changes slowly, then measuring it regularly will consume additional energy without a benefit.
- Turn off sensors that are not required - the ORB contains a rich set of internal sensors. If for example, the GPS is not required, turn it off.
- Choose external sensors carefully - a 4-20mA sensor may use more energy than a voltage output sensor.
- Limit the number of daily transmissions - consider only transmitting data when warning and

alarm conditions are breached.

- Ensure that the ORB is placed in a position where 4G LTE, Wi-Fi, and GPS reception is optimal. Far more current is consumed when transmitting and receiving in a poor signal environment.

Measured sleep, measurement, and transmission current is given in the table below. The measurements in the table represent current flowing from the internal LiPo battery at 3.5V, with external power to the ORB removed. Except where stated, the GPS is assumed off. Actual values will depend on the power source, selected measurements, battery charge state, distance from Wi-Fi or 4G LTE source and temperature.

Note A battery life calculator is available on the Senquip Website.

Mode	Current	Time
Sleep	65uA	Up to 24 hours
Measurement (no external sensors, GPS off)	40mA	0.5s
Measurement (no external sensors, GPS cold start)	70mA	54s
Transmit (WiFi from sleep)	97mA	8s
Transmit (4G LTE from sleep)	120mA	20s

3.5 Battery life

Senquip has measured actual power consumption figures to determine the expected life when using AA cells. Remember, when setting up for low power applications, that the ORB can make regular measurements and only transmit once per day unless it enters an exception state (warning or alarm is active), in which case a transmission is made immediately and the ORB switches to the *exception interval*, allowing for faster transmission rates.

Note Battery life expectation is extremely difficult to estimate and will be affected by all kinds of parameters such as temperature, battery chemistry, quality of reception, and sensors used. The numbers below should be taken as indicative only.

WiFi Transmission

Battery	Base interval	Transmit interval	Sensors enabled	Battery life
AA 1.6V Lithium	1 per day	1 per day	All internal sensors except GPS	8.9 years
AA 1.6V Lithium	1 per hour	1 per day	All internal sensors except GPS	8.3 years
AA 1.6V Lithium	1 per hour	1 per hour	All internal sensors except GPS	2.3 years
AA 1.6V Lithium	1 per day	1 per day	All internal sensors and GPS	7.8 years
AA 1.6V Lithium	1 per hour	1 per day	All internal sensors and GPS	2.0 years
AA 1.6V Lithium	1 per hour	1 per hour	All internal sensors and GPS	1.2 years

4G LTE Transmission

Battery	Base interval	Transmit interval	Sensors enabled	Battery life
AA 1.6V Lithium	1 per day	1 per day	All internal sensors except GPS	7.1 years
AA 1.6V Lithium	1 per hour	1 per day	All internal sensors except GPS	6.5 years

AA 1.6V Lithium	1 per hour	1 per hour	All internal sensors except GPS	0.9 years
AA 1.6V Lithium	1 per day	1 per day	All internal sensors and GPS	6.3 years
AA 1.6V Lithium	1 per hour	1 per day	All internal sensors and GPS	1.9 years
AA 1.6V Lithium	1 per hour	1 per hour	All internal sensors and GPS	0.6 years

3.6 Freight Mode

When shipping an ORB, it is important that the device is placed in freight mode. In freight mode, the ORB is put into sleep mode to reduce battery drain to the minimum, and all transmitting devices are turned off. The ORB will exit freight mode when it detects that power has been re-connected.

To enter freight mode access the device webserver by pressing the setup button or directly from a browser if the ORB webserver is always on and you know the IP address. From the webserver, chose the admin link and perform the steps below:

1. Disconnect all wires including the power input. Remove AA batteries (if fitted).
2. Press the 'Enter Freight Mode' button below.
3. Wait 5 seconds, then check the Status and Network lights remain off.
4. Confirm freight mode has been entered by pressing the *Reset* button; there should be no response from the ORB.

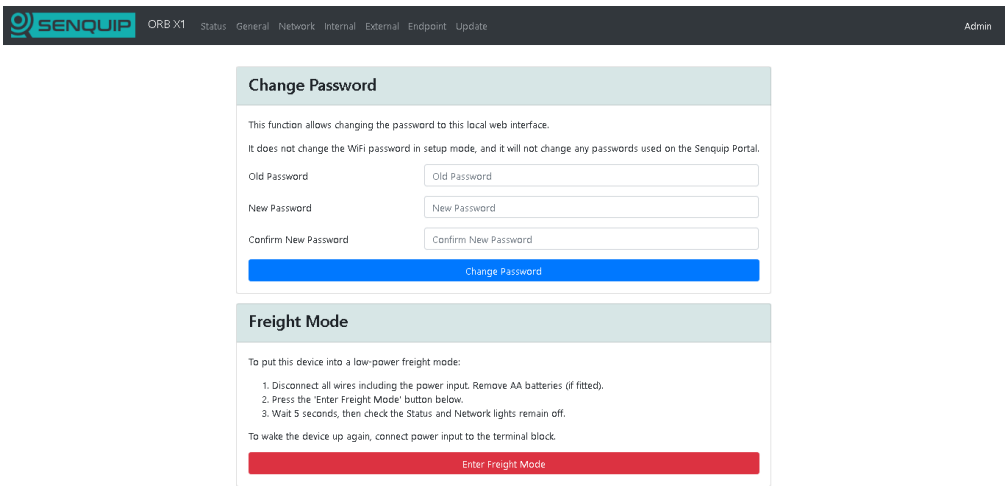

Figure 3.3. Entering freight mode

Note A shortcut is provided where pressing the *Setup* button three times, when in setup mode, will cause the Senquip ORB to enter freight mode. Confirm freight mode has been entered by pressing the *Reset* button.

Chapter 4

General Setup

4.1 Measurement and Transmit Intervals

The ORB can be configured to take periodic measurements and then to transmit those measurements at various intervals or on exception. When not measuring or transmitting, the ORB will remain in a very low power state, referred to as sleep. For example, the ORB can be configured to measure temperature at 1 minute intervals, but only to transmit the temperature once an hour or if a warning or alarm level is exceeded (an exception occurs). By allowing a more regular measurement interval and a less frequent transmit interval, the ORB is able to reduce power consumption by remaining asleep, thereby maximising battery life. In the event of an exception, a more regular transmit rate can be selected.

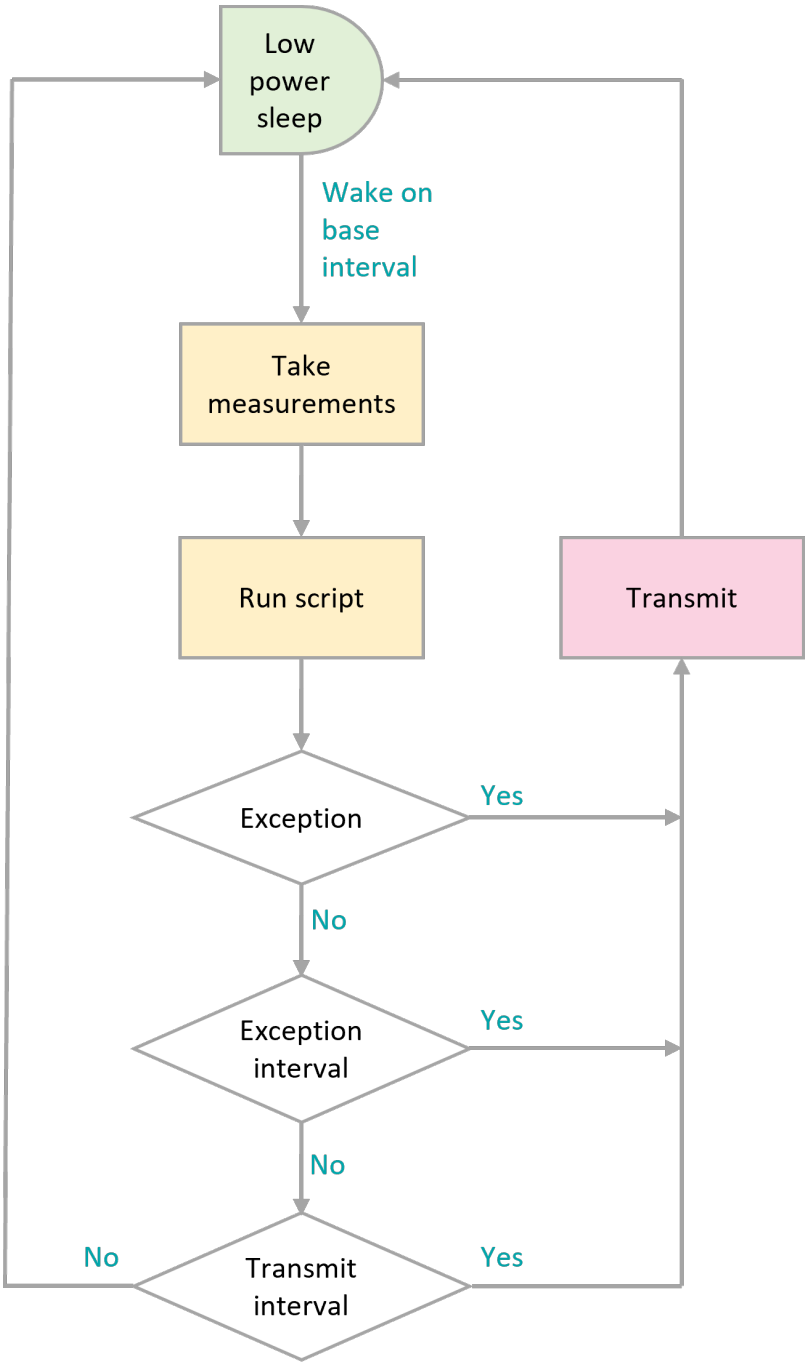

Figure 4.1. Timing flowchart

- Green: Lowest power state; aim to configure the ORB to spend maximum time in this state.
- Orange: Moderate power usage; try to reduce the number of times that the ORB wakes to measure sensors.
- Pink: Highest power consumption; only transmit data when required.

To allow flexible measurement and transmit intervals, whilst ensuring the lowest possible power consumption, the ORB has three global and one per-peripheral measurement interval settings.

Base-Interval The base-interval is the period of time after which the ORB will wake from sleep in order to check if there are any measurements to perform or if it is time to transmit the latest measured

data. In a system where measurements are required often, the base-interval can be as low as 5 seconds. In systems that are slow to respond, the base interval can be as high as 24 hours. It makes sense to set the base interval as long as possible to enable the ORB to spend as much time as possible in a low-power sleep state.

Each peripheral, whether internal to the ORB or attached to the interface, can be set to only be measured after a number of base-intervals. If a particular peripheral has the interval setting set to 1, then it will be measured at each base-interval. If the interval is set to 0, then that particular peripheral will be turned off. Each time a measurement is taken, the results will be compared with alert, warning and alarm conditions and if an alert or exception occurs, the results will immediately be transmitted.

Note if a base-interval of less than 10 seconds is specified when the ORB is communicating via Wi-Fi or 120 seconds over 4G LTE, the ORB will remain awake at all times. This setting is not suitable for battery operated installations.

Note if the enabled measurements take longer to complete than interval at which they are scheduled, the ORB will not return to sleep and measurements will be sent as fast as possible. This is most likely where the GPS and serial devices are enabled.

Transmit-Interval The transmit-interval is the time between message transmissions. It is a multiple of the base interval and is set as a number of base-intervals. All enabled measurements will be transmitted at the transmit-interval. For example, if the base-interval is 1 minute and the transmit-interval setting is sixty, then all the latest measurements will be transmitted every 60 minutes.

In cases where the ORB is configured to measure more often than to transmit, measured data can be saved and transmitted in batches. It is more efficient to batch messages and transmit less regularly than to send individual measurements. Use this option where power use needs to be minimised but all measured data needs to be retrieved.

Note if during a measurement interval, an exception occurs, the ORB will immediately transmit the measured data and will switch to the exception interval.

Note if measurement and transmission intervals coincide, measurements will be taken before transmission to ensure the latest values are transmitted.

Exception-Interval If a warning or alarm occurs, the transmit-interval can be shortened in order that measurements are transmitted more often. The exception-interval is a multiple of the base interval and sets the time between message transmissions when an exception is current (warning or alarm). For example, if the base-interval is 1 minute and the transmit-interval setting is sixty, under normal circumstances, measurements will be transmitted every 60 minutes. If the exception-interval setting is 5, then when a warning or alarm condition is current, measurements will be transmitted at 5 minute intervals instead of 60 minute intervals.

Note Only exceptions, which are warnings and alarms will trigger the exception-interval; alert conditions such as low battery will not.

If, on any base interval, a new exception or alert is detected, an immediate transmission will be made regardless of the transmit-interval.

4.2 Power Supply

An alert can be generated when the external power source is lost or the internal LiPo battery or replaceable AA cells are low or are running out of charge. If enabled, the external power loss alert will be triggered as the voltage drops below 7V. The AA battery alert levels are configurable. In order

to conserve energy, the ORB can be configured to enter hibernate when external power is lost. In this mode, the ORB will wake on it's usual base interval, but if power is still lost, it will go back to sleep. A number of base intervals that occur before the ORB enters hibernate can be set. This allows the ORB to continue operating for a period of time after power is lost. The ORB can be set to wake from hibernate if motion is detected by the internal accelerometer or power is restored. In hibernate mode, a transmission is made once every 6 hours to allow the user to verify that the ORB is still functional. In the case of the internal LiPo battery being low, this may indicate a faulty, under-rated or dirty solar panel or permanent loss of external power. A low AA battery warning indicates that the replaceable AA cells are low and should be replaced as soon as possible. If the power loss alert is enabled where solar panels are installed, an alert should be expected as clouds move over or the sun sets.

Note If *Device Always On* and *Sleep on Power Loss* are both selected then the ORB will remain awake as long as it is powered; the ORB will sleep when power is removed.

4.3 Settings

A full list of general settings is given in the table below.

Webserver Name	Webserver Item	Function	Default Value	Internal Reference
Device ID	Read only text box	Unique ID associated with the ORB during manufacture.		device.id
Device Model	Read only text box	Model number, in this case X1 followed by either W for the Wifi or G for the GSM model.		device.model
Firmware Version	Read only text box	The verion number of the firmware currently loaded in the ORB.		device.fw
Hardware Revision	Read only text box	The revision of hardware present in the ORB		
Device Name	Text entry box	A name for the ORB that is meaningful to the user.	ORB X1	device.name
Timing				
Base Interval	Text entry box	The time after which the ORB will wakeup to check which measurements need to be taken and if a transmission is scheduled.	Default: 30 sec	device.base_interval
			Min: 5 sec	
			Max: 86400 sec	
Transmit Interval	Text entry box	The number of base intervals after which a transmission is made.	Default: 1	device.transmit_interval
			Min: 1	
			Max: 999999	
Exception Interval	Text entry box	If an exception is current this interval replaces the transmit interval to allow faster updates if required.	Default: 1	device.exception_interval
			Min: 1	
			Max: 999999	

Device Always On	Tick box	If enabled the device will not sleep between Base Intervals and will remain awake. Not recommended for battery powered applications.	Enabled	device.always_on
Batch Transmit	Tick box	Tick this box if messages are to be batched and transmitted together.		
WebServer Always On	Tick box	Keeps the webserver enabled at all times to allow remote connection.		device.web_always_on
Power Input				
Power Loss Alert	Tick box	Enable if an alert is to be sent when the power input drops below a specified limit.	Disabled	device.power.alert.enable
Hibernate on Power Loss	Tick box	If this option is selected, then the ORB will enter hibernate mode when power is lost and will only transmit every 6 hours.	Disabled	device.power.sleep
Hibernate Delay Intervals	Text entry box	Enter the number of base intervals after power has been lost before the ORB enters hibernate	5	
Count Hours	Tick box	Counts the number of hours that the ORB is powered. Typically used as an hour meter.	Disabled	
AA Battery				
AA Battery Low Alert	Tick box	Enable if an alert is to be sent when the AA battery level drops below a specified limit.	Disabled	device.batt.alert.enable
Threshold	Text entry box	The voltage at which an alert is raised.	Default: 4.8V	device.batt.alert.threshold
			Min: 0V	
			Max: 100V	
Lipo Battery				
Lipo Battery Low Alert	Tick box	Enable if an alert is to be sent when the Lipo battery level drops below a specified limit.	Disabled	device.lipo.alert.enable
Threshold	Text entry box	The voltage at which an alert is	Default: 3.4	device.lipo.alert.threshold

Chapter 5

Internal Sensors

5.1 Light Sensor

The Senquip ORB is equipped with an internal light sensor that is used to activate the ORB setup functions when the lid is opened and to detect tamper attempts. The light sensor is sampled on a regular basis and does not have an associated measurement interval.

An alert can be generated when the ORB detects light, meaning that the lid has been opened.

Note A tamper alert, if enabled will be triggered by a tamper attempt or an authorised entry to change settings.

A full list of light sensor settings is given in the table at the end of the chapter.

5.2 Accelerometer

The Senquip ORB has an integrated 3-axis accelerometer. The accelerometer allows for angle measurement, movement detection, harsh-usage monitoring and utilisation calculation. To provide more accurate measurement for pitch, roll and angle measurement, each time the accelerometer is measured, 10 samples will be taken at 1 msec intervals and the average will be returned as the measured value. Pitch, roll and angle will be calculated from the average acceleration.

Raw accelerometer data in the X (through the lid), Y (left to right across the ORB lid) and Z (from the hinge down to the cable gland) are available and are delivered in G's. These values can be useful, for instance where an incident is being re-created from force data.

Note Incident recreation using force data requires high speed sampling. Please contact Senquip to discuss your application.

When looking at the front cover, positive pitch is described as the top of the ORB tilting towards the observer. In the same scenario, negative pitch is described as the top of the ORB cover moving away from the observer.

Figure 5.1. Definition of pitch

When looking at the front cover, positive roll is described as the top of the ORB tilting towards the right. In the same scenario, negative roll is described as the top of the ORB cover moving towards the left.

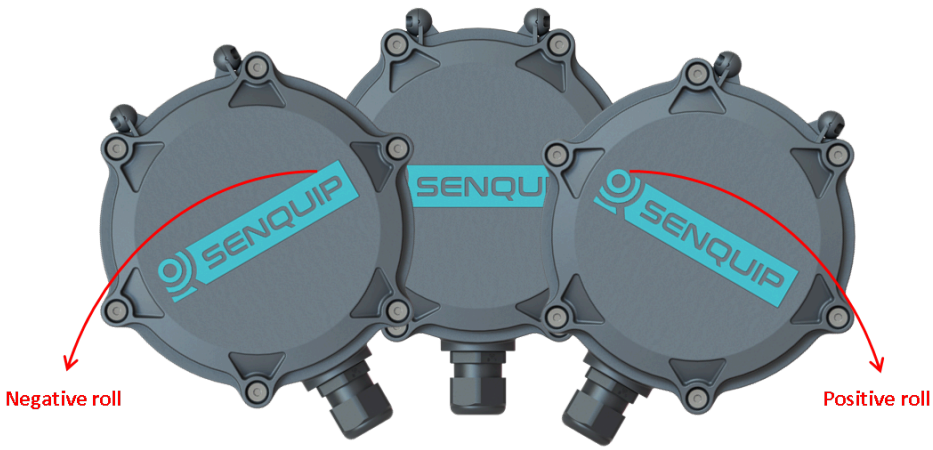

Figure 5.2. Definition of roll

Pitch and roll are useful in applications where objects to which the ORB is attached have a definite front, back, left and right; for instance a vehicle. For objects like a pole, the user may be more interested in the angle of the pole to vertical. In these applications, the tilt may be more useful than pitch or roll.

Figure 5.3. Definition of tilt

5.2.1 Specification

Parameter	Specification
G-force range	+- 16G
Resolution	1mG
Sensitivity change vs temperature	0.1% per°C
Typical zero-g level offset accuracy	+- 40mG
Tilt resolution	0.1 deg
Tilt accuracy (0-45 deg)	1.0 deg
Tilt accuracy (45-90 deg)	2.0 deg

5.2.2 Settings

Accelerometer measurements can be scheduled as a multiple of the base-interval. The fastest possible measurement rate is achieved by setting the *interval* to 1 in which case measurements will occur on every base interval. To reduce power consumption, the measurement rate can be turned down by increasing the *interval*.

Warning and *alarm* thresholds for pitch, roll and angle can be enabled. Once enabled, each time a measurement is completed, the returned value will be compared with minimum and maximum *warning* and *alarm* thresholds. If a *warning* or *alarm* level is breached, a message will immediately be transmitted. As long as the warning or alarm condition persists, messages will be transmitted at the exception-interval rather than the transmit-interval. *Hysteresis* can be specified in 1 degree increments, to prevent multiple alarms in the presence of vibration.

The accelerometer is able to detect *motion* and *shocks* due to harsh usage even during sleep. If *motion*

or *shock* monitoring is enabled and either of those events occurs, a flag will be set. Event flags are checked at each base-interval and if one exists, an alert message can be scheduled to be sent at that time. The *threshold* as well as *time* for which an activity must be present can be set for both *motion* and *shock* monitoring.

Note Pitch and roll warning and alarm levels can be positive or negative. Angle warning and alarms can only be positive.

Vibration can be used as a trigger to count hours. This may be useful where the number of hours that an engine is running needs to be calculated.

A full list of accelerometer settings is given in the table at the end of the chapter.

5.3 Pressure Sensor

The ORB contains a built-in pressure sensor for measuring atmospheric pressure and short term height change. Although the enclosure is rated to IP67, an integrated moisture resistant gore-vent allows internal and external pressure to equalise, meaning accurate atmospheric pressure measurement.

5.3.1 Specification

Parameter	Specification
Pressure range	300 - 1100 hPa
Temperature range	-40 to 85°C
Absolute accuracy (0 to 65 deg C)	+-1hPa
Relative accuracy (25 to 40 deg C)	+-0.12hPa, equivalent to +-1m altitude
Absolute maximum pressure	20,000hPa

5.3.2 Settings

Measurements can be scheduled as a multiple of the base-interval. The fastest possible measurement rate is achieved by setting the *interval* to 1 in which case measurements will occur on every base interval. To reduce power consumption, the measurement rate can be turned down by increasing the *interval*.

Warning and *alarm* thresholds for pressure can be enabled. Once enabled, each time a measurement is completed, the returned value will be compared with minimum and maximum *warning* and *alarm* thresholds. If a warning or alarm level is breached, a message will immediately be transmitted. As long as the warning or alarm condition persists, messages will be transmitted at the exception-interval rather than the transmit-interval. *Hysteresis* can be specified in 1 kPa increments, to prevent multiple alarms in the presence of fluctuating pressure, for instance due to wind.

A full list of pressure sensor settings is given in the table at the end of the chapter.

5.4 Magnetic switch

The Senquip QUAD contains a built-in hall-effect sensor that acts as a magnetic switch. When the switch detects a magnet, the Senquip QUAD can be made to enter setup mode, wakeup, or trigger a function in a script.

Figure 5.4. Location of magnetic switch

5.4.1 Settings

Three actions are available when the magnetic switch is activated.

- *Setup*: Put the device into setup mode. Identical to pressing the Setup button. If the device is asleep, it will wake and enter Setup Mode.
- *Wake*: Wake the device up and perform a measurement cycle. There is no action if device is already awake.
- *Trigger*: Wake the device if asleep. Trigger TP0 before first measurement cycle. TP0 should be handled in a script.
- *All*: All actions above. Wake device if asleep. Enter setup mode. Trigger TP0 before first measurement cycle.

5.5 Temperature sensor

An integrated temperature sensor allows for measurement of ambient temperature. Please be aware that the temperature sensor will measure the temperature inside the ORB enclosure; this temperature can be subject to fluctuations, for example when the internal lithium ion battery is charging and so

the environment within the ORB heats up. For accurate external temperature measurement or to measure a wider range of temperatures, use the thermocouple peripheral.

5.5.1 Specification

Parameter	Specification
Measurement range	-40 - 85°C
Resolution	0.01 deg°C
Absolute accuracy (25°C)	+-0.5 deg°C
Absolute accuracy (0 - 65°C)	+-1 deg°C

5.5.2 Settings

Measurements can be scheduled as a multiple of the base-interval. The fastest possible measurement rate is achieved by setting the *interval* to 1 in which case measurements will occur on every base interval. To reduce power consumption, the measurement rate can be turned down by increasing the *interval*.

Warning and *alarm* thresholds for ambient temperature can be enabled. Once enabled, each time a measurement is completed, the returned value will be compared with minimum and maximum *warning* and *alarm* thresholds. If a *warning* or *alarm* level is breached, a message will immediately be transmitted. As long as the warning or alarm condition persists, messages will be transmitted at the exception-interval rather than the transmit-interval. *Hysteresis* can be specified in 1°C increments, to prevent multiple alarms in the presence of fluctuating temperature.

A full list of temperature sensor settings is given in the table at the end of the chapter.

5.6 GPS

Models of the ORB that have 4G LTE connectivity also have an integrated Global Positioning System (GPS). The GPS receiver, with integrated antenna and LNA allows for position and speed based reporting. The internal GPS will receive GPS, GLONASS, BeiDou and Galileo satellites to ensure high accuracy measurement and fast time to first fix. Data available from the GPS includes:

- Latitude, longitude and height
- Speed (km/h) and bearing
- Date and time
- Number satellites being tracked

In order to utilise the GPS, the ORB needs to be mounted such that the internal antenna has visibility of the sky. Plastic and fibreglass roof sheeting will have a minimal effect on GPS performance whereas reinforced concrete and metal roofs will render the GPS inoperable. In applications where GPS is required but the ORB cannot be mounted in a position where the sky is visible, a GPS re-radiating antenna can be used. Please make sure that the chosen re-radiating antenna is of high quality and legal for use in your region. An advantage of good GPS signal quality is that the ORB will consume less power as acquisition time will be less.

5.6.1 Specification

Parameter	Specification
Time to first fix from power up	Typically 60 seconds
Position update rate	Maximum 1Hz
Horizontal position accuracy	Typically +-5m (<2.5m CEP-50)
Vertical position accuracy	Typically +-20m

Horizontal speed accuracy	1km/h

5.6.2 Settings

Measurements can be scheduled as a multiple of the base-interval. The fastest possible measurement rate is achieved by setting the *interval* to 1 in which case measurements will occur on every base interval. To reduce power consumption, the measurement rate can be turned down by increasing the *interval*. The GPS is a high power peripheral and so use should be limited when running on battery power.

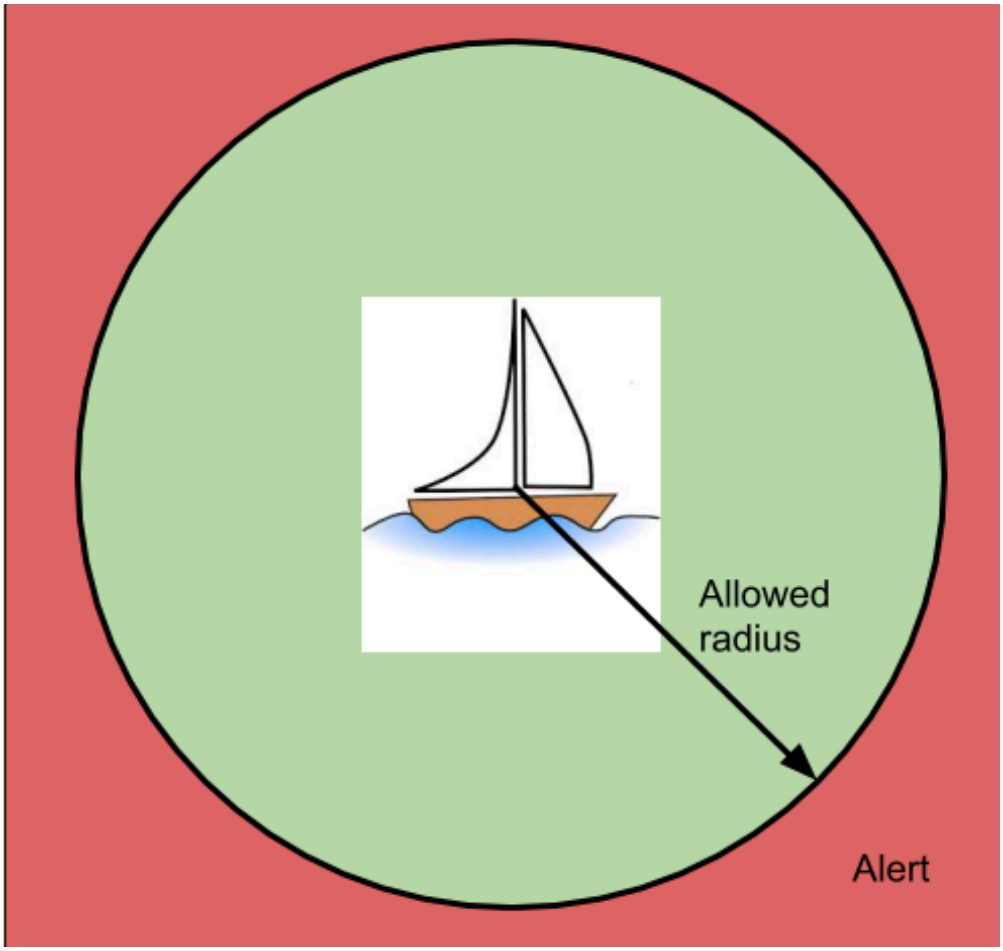

Figure 5.5. GPS alert parameters

The GPS can create an *alert* based on position and speed. A known position (*expected latitude* and *expected longitude*) can be specified and if the ORB moves a particular *radius* from that point, an alert can be raised. *Hysteresis* can be specified in 1 meter increments to prevent multiple alerts, for instance as a boat swings on a mooring near the edge of the allowed radius. Likewise, a maximum *speed* can be specified and if the ORB exceeds that speed, an alert will also be raised. Speed *hysteresis* can be specified in 1km/h increments, to prevent multiple alerts as the speed fluctuates at the alert point. The time that GPS speed exceeds 2km/h can counted and be used to calculate machine utilisation.

Note In the example above, the ORB could also report bilge water level, solar battery voltage and a host of other parameters associated with the yacht.

A full list of GPS settings is given in the table at the end of the chapter.

5.7 Bluetooth Interface

The ORB has a Bluetooth peripheral that can transmit and receive Bluetooth Low Energy (BLE) advertising packets. BLE beacons typically use the advertising packets to communicate measured data such as temperatures, voltages, movement, and battery voltage. BLE tags are a special type of beacon that typically only contain identification information and are used to locate items. BLE beacons send advertising messages at different rates. Some report every second and some may be every minute or more. Battery operated BLE devices tend to send at lower rates to save power. Some BLE device are smart and will slow their send rate if they are not being used. A tire pressure monitoring device may stop sending if the tire is not rotating. Typical protocols used in advertising packets include Eddystone and iBeacon. The ORB supports both.

The BLE beacons from ELA shown below enable identification, and measurement of temperature, humidity, voltage, switch position, and more.

Figure 5.6. Example BLE beacons from ELA

The ORB will report the beacon address, data, and the strength of the received signal.

- The address (or identifier) is unique and allows individual tags to be recognised.
- The data may contain battery voltage, temperature, humidity, or any other data being conveyed by the beacon.
- The receive signal strength (RSSI) gives an indication of how strong the signal from the beacon is.

For details on using the ORB as a BLE beacon to transmit custom advertising packets, please refer to the Senquip Scripting Guide.

Note The BLE module and Wi-Fi module share a common radio. BLE operation will work best when

the ORB is operated using a cellular network rather than Wi-Fi.

5.7.1 Specification

Parameter	Specification
Bluetooth version	4.2

5.7.2 Settings

Measurements can be scheduled as a multiple of the base-interval. The fastest possible measurement rate is achieved by setting the *interval* to 1 in which case the Bluetooth peripheral will be sampled on every base interval. To reduce power consumption, the measurement rate can be turned down by increasing the *interval*.

When active, the Bluetooth peripheral will scan for all advertising packets. In a typical environment, phones, computers, and other devices are all advertising. The ORB Bluetooth peripheral could easily report a dozen Bluetooth devices even when the one you are searching for is off. The ORB can filter for only the required Bluetooth devices by filling in the *Address Capture List*. Required addresses should be entered in hexadecimal and should be separated by commas. When the ORB wakes for the next measurement interval, the Bluetooth peripheral will be sampled until all the messages listed have been found or the *Capture Time* has been reached. If multiple messages with the same identifier are required in a single measurement interval, place a * followed by the number of messages of that identifier to be returned after the identifier in the list. For example: 98588A10375E*4, 98588a103777, 98588a103888*10 will return 98588A10375E four times, 98588a103777 once and 98588a103888 ten times. Leave the *ID Capture List* blank to receive all messages.

The *Capture Time* setting can be used to set a timeout after which the Bluetooth peripheral will stop listening, allowing the ORB to transmit received messages and return to sleep. *Capture-time* can be used as a mechanism to allow the ORB to sample the environment for devices for a defined time-period.

A full list of Bluetooth settings is given in the table at the end of this chapter.

5.8 Internal Sensor Settings

A full list of settings for internal sensors is given in the table below.

Name	Item	Function	Range	Unit	Internal Reference
Light Sensor					
Name	text	A name for the light sensor that is meaningful to the user.	25 chars		tamper.name
Tamper Alert	boolean	This parameter determines if an alert is generated when the light sensor detects light or not.			tamper.enable
Ambient Temperature					
Name	text	A name for the input that is meaningful to the user.	25 chars		ambient.name
Interval	integer	The number of base intervals after which the temperature is sampled. A value of 1 means that the input is collected every base interval. Set to 0 to disable.	0 to 10000		ambient.interval

Hysteresis	decimal	The amount by which the measured value has to drop below the threshold to re-enable the alert after an event.	0 to 100	°C	ambient.hysteresis
Warning	text	Warning thresholds. Refer to user guide.	-40 to 100	°C	ambient.warning
Alarm	text	Alarm thresholds. Refer to user guide.	-40 to 100	°C	ambient.alarm
Accelerometer					
Name	text	A name for the input that is meaningful to the user.	25 chars		accel.name
Interval	integer	The number of base intervals after which the accelerometer is sampled. A value of 1 means that the input is collected every base interval. Set to 0 to disable.	0 to 10000		accel.interval
Output XYZ Vectors	boolean	Send X,Y,Z gravity vectors in data output.			accel.outputxyz
Hysteresis	decimal	The amount by which the pitch, roll or angle has to exceed a threshold before triggering alarms or warnings.	0 to 20	Degrees	accel.hysteresis
Pitch Warning	text	Warning thresholds. Refer to user guide.	-90 to 90	Degrees	accel.pitch.warning
Pitch Alarm	text	Alarm thresholds. Refer to user guide.	-90 to 90	Degrees	accel.pitch.alarm
Roll Warning	text	Warning thresholds. Refer to user guide.	-90 to 90	Degrees	accel.roll.warning
Roll Alarm	text	Alarm thresholds. Refer to user guide.	-90 to 90	Degrees	accel.roll.alarm
Angle Warning	text	Warning thresholds. Refer to user guide.	0 to 90	Degrees	accel.angle.warning
Angle Alarm	text	Alarm thresholds. Refer to user guide.	0 to 90	Degrees	accel.angle.alarm
Motion Warning	text	Warning thresholds. Refer to user guide.	0 to 5000	milli-g	accel.motion.warning
Motion Alarm	text	Alarm thresholds. Refer to user guide.	0 to 5000	milli-g	accel.motion.alarm
Wake from Hibernate	boolean	The high warning motion threshold is used to wake the device when hibernating.			accel.motion.wake_from_hiber
Motion Wake Threshold	decimal	The motion threshold above which the device will wake from hibernation.	1 to 2000	milli-g	accel.motion.wake_threshold
Count Motion Hours	boolean	Counts the number of hours the device exceeds the Motion Wake Threshold. Typically used as an machinery work vs idle hour meter.			accel.motion.count_hours
GPS					
Name	text	A name for the GPS signal that is meaningful to the user.	25 chars		gps.name
Interval	integer	The number of base intervals after which the gps is sampled. A value of 1 means that the input is collected every base interval. Set to 0 to disable.	0 to 10000		gps.interval

Max Time	integer	Maximum time the device will wait for a valid GPS fix.	0 to 3600	Seconds	gps.maxtime
Position					
Position Alert	boolean	Sets whether a change in position generates an alert.			gps.position.alert.enable
Radius	integer	An alert will be raised if the device moves further than this value from the expected position.	1 to 10000	Meters	gps.position.alert.radius
Hysteresis	integer	Once the alert is active or inactive, the radius must change by this value to change the alert state.	1 to 10000	Meters	gps.position.alert.hysteresis
Expected Latitude	decimal	Latitude at which the device is expected to be.	-90 to 90	Degrees	gps.position.alert.lat
Expected Longitude	decimal	Longitude at which the device is expected to be.	-180 to 180	Degrees	gps.position.alert.lon
Speed					
Count Movement Hours	boolean	Counts the number of hours the device is moving according to the GPS speed.			gps.speed.count_hours
Speed Alert	boolean	Sets whether a change in speed generates an alert.			gps.speed.alert.enable
Threshold	integer	An alert will be raised if the device's speed goes above this threshold.	1 to 1000	km/h	gps.speed.alert.threshold
Hysteresis	integer	Once the alert is active or inactive, the speed must change by this value to change the alert state.	1 to 1000	km/h	gps.speed.alert.hysteresis
Bluetooth					
Name	text	A name that is meaningful to the user.	25 chars		ble.name
Interval	integer	The number of base intervals after which the Bluetooth module is turned on. Set to 0 to disable.	0 to 10000		ble.interval
Scan Time	integer	The device will capture matching messages for this length of time.		Seconds	ble.capture_time
Address Capture List	text	List of adresses to be captured in HEX format, separated by a comma. Leave blank to capture all.	200 chars		ble.id_list
Send Raw Data	boolean	If ticked, all captured messages will be added to the data message.			

Chapter 6

External Sensors

6.1 Current Source 1 and 2

Two 12V switched current sources, which can source a maximum of 200mA each are supplied on pins 3 and 5. The 12V supply is internally generated and is battery backed and so can still be used when running of solar or battery power. Current supplied by each of the switched current sources is measured to a resolution of 0.1mA and so is able to be used to supply and measure the output of 4-20mA and other current-output sensors. Internal resettable fuses protect the outputs against over-current events.

The switched current sources are expected to be used to power external sensors such as hall-effect sensors, 4-20mA sensors and serial devices. It can be configured to turn on prior to measurement to allow sensors time to boot or for measurements to stabilise. After measurements are complete, the output can be switched off to preserve power; this is especially important when running off solar or batteries. The current sources can be used to power a sensor that is measured using one of the inputs, since the inputs are measured just before the current sources are turned off.

Note When a current source is used to power a sensor that is read by an input, the intervals specified for the current source and input must be the same.

Many 4-20mA sensors are powered by the current flowing through the loop to which they are connected and are called loop powered devices. Loop powered sensors can be connected using switched source 1 as the current source (pin 3) and GND (pin 2 or 4) or alternatively using switched source 2 as the current source (pin 5 as shown below) and GND.

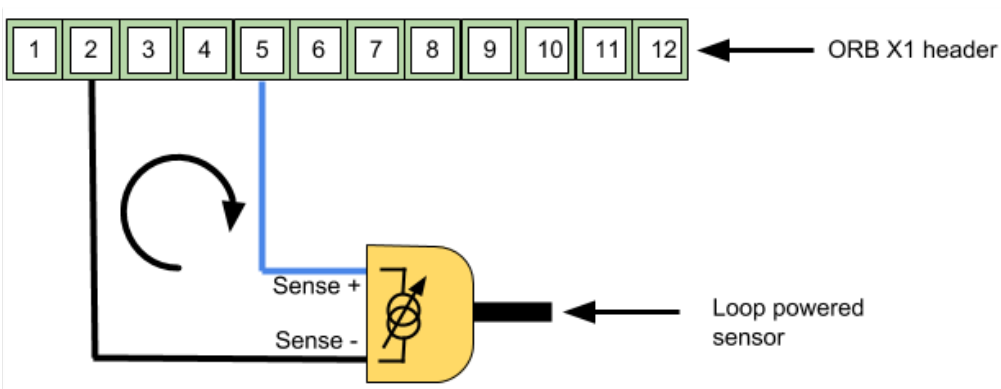

Figure 6.1. Connecting a single loop powered device

Some sensors and systems that use current as an output require an external power supply. In an implementation where system power is available, the sensor can be connected as shown below.

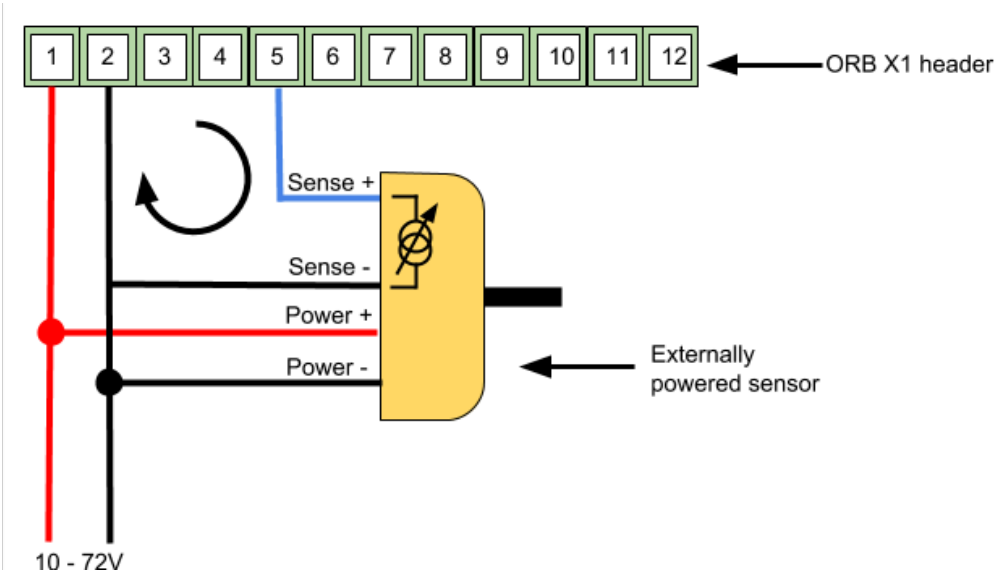

Figure 6.2. Connection of a single externally powered 4-20mA device

In solar or battery operated systems where permanent power is not available, externally powered current-output sensors can utilise the ORB switched power source as shown below. Switched source 1 and 2 should be configured to switch on for the minimum amount of time before a measurement is made in order to minimise power consumption.

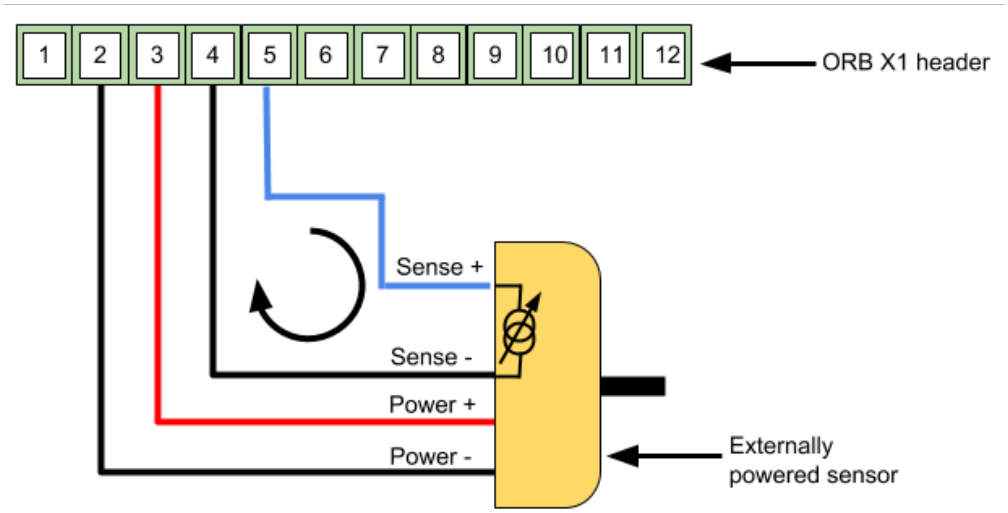

Figure 6.3. Connection of a single externally powered 4-20mA device using switched power

Two loop powered 4-20mA sensors can be connected to the ORB by utilising both of the switched current sources.

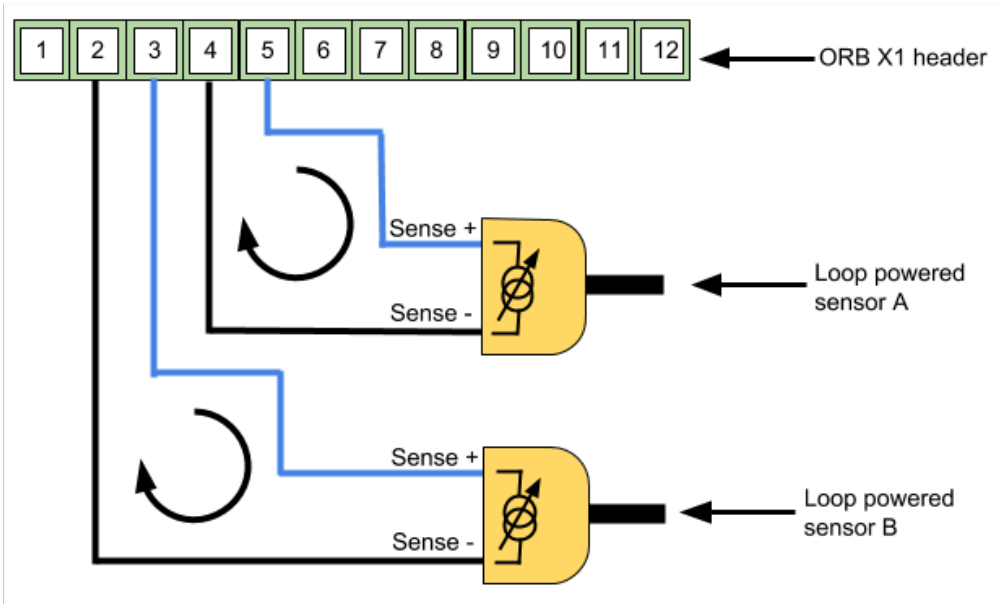

Figure 6.4. Connection of two loop powered 4-20mA devices

Both inputs will report the voltage that is connected to them and so can be used as general purpose analog or digital inputs.

Note When a voltage is connected to the current source pins, current may flow backwards into the ORB and the resulting current measurement may be negative.

Warning Connecting a power source greater than 12V to pins 3 or 5 may result in permanent damage to the functions of those pins or to the ORB.

6.1.1 Specification

Parameter	Specification
Maximum source current	100mA per pin
Maximum measurable current	40mA
Current measurement accuracy	+-0.1mA
Current measurement precision	20uA (11 bits over 40mA)
Maximum voltage on pins	12V
Voltage measurement accuracy	+-300mV

6.1.2 Settings

Measurements can be scheduled as a multiple of the base-interval. At the *interval*, the current sources will turn on and a measurement will be made. The fastest possible measurement rate is achieved by setting the interval to 1 in which case measurements will occur on every base interval. To reduce power consumption, the measurement rate can be turned down by increasing the measurement-interval.

If a connected device needs some time to stabilise before measurements can be taken, the current sources can be set to turn on a short time before a measurement is to be made using the *start time* option. Keep the *start time* value to a minimum to reduce overall power consumption when running on batteries or solar.

Note If more than one external device is being powered by the switched power, please ensure that the stabilisation time is set to the maximum for all devices powered.

If the current sources are being used to power an external sensor device that needs to be constantly powered, the *always on* option can be used to prevent the current source from being turned off.

The ORB measures current, in mA, sourced by the two outputs. If however the attached sensor is calibrated in a unit other than mA, then that *calibration* can be applied to the measurement. If for instance, a 4-20mA level sensor is attached to output 1 and 4mA represents 0m of water and 20mA represents 100m of water, then the *calibration* values are set as follows:

current1.calibration.low_x = 4	4mA is the low value at which the sensor is specified
current1.calibration.low_y = 0	0m is the value represented by 4mA
current1.calibration.high_x = 20	20mA is the high value at which the sensor is specified
current1.calibration.high_y = 100	100m is the value represented by 20mA
current1.calibration.unit = m	m is the unit as measured by the sensor

The mA values measured by the ORB will be converted into the user specified units before being transmitted or being compared with the warning and alarm values. If the user wants to leave the units in mA, then use the defaults as specified in the table below.

The input measurement range and accuracy can be optimised specifically for 4-20mA devices. Select the *optimise* option to optimise accuracy for 4-20mA sensors.

Warning and *alarm* thresholds can be enabled. Once enabled, each time a measurement is completed, the returned value will be compared with minimum and maximum *warning* and *alarm* thresholds. If a *warning* or *alarm* level is breached, a message will immediately be transmitted. As long as the *warning* or *alarm* condition persists, messages will be transmitted at the exception-interval rather than the transmit-interval. *Hysteresis* can be specified in increments of the specified unit, to prevent multiple alarms in the presence of electrical noise.

A full list of current source settings is given in the table at the end of this chapter.

6.2 Serial Interface

The serial port can be used to capture data that is sent from an external system or to interface to a MODBUS sensor.

The serial port occupies pins 6 and 7 on the interface header. The pins have functions that depend on the chosen interface as shown in the table below. When RS485 mode is chosen, an optional 120Ω termination resistor can be selected.

Interface type	Pin 6 function	Pin 7 function
RS232	Receive (Rx)	Transmit (Tx)
RS485	RS485-B	RS485-A

Note RS485-B is sometimes referred to as D+ or TX+/RX+ and RS485-A as D- or TX-/RX-.

The RS485 receiver supports up to 256 nodes per bus, and features full failsafe operation for floating, shorted or terminated inputs. Interface pins are protected against electrostatic discharge up to 26kV, whether the ORB is powered or unpowered.

6.2.1 Specification

Parameter	Specification
RS232 transmitter output low voltage (typical)	-5.5V

RS232 transmitter output high voltage (typical)	+5.9V
RS232 Input threshold voltage	+1.5V
RS485 differential output voltage (minimum with load resistance 120Ω)	+2V
RS485 differential input signal threshold	+-220mV
Maximum nodes in RS485 mode	256
RS485 termination resistor	120Ω

6.2.2 Settings

Measurements can be scheduled as a multiple of the base-interval. The fastest possible measurement rate is achieved by setting the *interval* to 1 in which case measurements will occur on every base interval. To reduce power consumption, the measurement rate can be turned down by increasing the *interval*.

In *serial capture* mode the measurement interval can be used to reduce the number of readings being provided by a connected sensor or system that may be permanently powered. If for instance, a connected system is sending a message every second but it is only required to be read and transmitted every minute, the measurement interval can be set to 1 minute in which case the ORB will wake on the minute interval, receive a message and return to sleep thereby missing the other 59 messages sent by the attached system. Since serial packets cannot be interrogated by the ORB without a customised script, it makes sense to set the measurement interval to the same as the transmit interval in most cases.

The serial port on the ORB can be configured as an RS232 or RS485 hardware interface using the *type* option.

If RS485 mode is selected, an optional 120Ω termination resistor can be selected by selecting the *Termination resistor* option. The purpose of the termination resistor is to match the impedance of a transmission line to the hardware impedance of the interface to which it is connected. Termination is generally not required in lower speed networks (9600 baud or less) and networks shorter than 500m in length. No more than 2 termination resistors should be used, one at each end of the RS485 transmission line.

A *baud rate* of 4800, 9600, 19200, 38400, 56800 or 115200 needs to be selected using the *baud rate* option. Other settings, including the number of bits, odd or even parity and 1 or 2 stop bits are added in the *settings* field. The most common setup is 8 bits, no parity and 1 stop bit or "8N1".

The serial interface can be configured in serial capture mode or MODBUS mode using the *mode* option. Capture mode is typically used where an external sensor sends serial data and a portion of that serial data is to be captured. MODBUS mode is used to connect to external sensors that are compatible with the MODBUS standard.

In *serial capture mode* The ORB listens for periodic data and when received, transmits this data at the next send interval. The maximum length of a message that can be captured is 512 characters. Once 512 characters have been received, the ORB will terminate the capture and will transmit it on the next transmit interval.

In capture mode, the *max-time* setting can be used to set a timeout after which the serial port will return to sleep. *Max-time* can be used as a way to end serial measurement in the event that no serial data is received, or as a mechanism to allow the ORB to sample the serial port for a defined time-period.

Note If the serial port needs to be kept on all the time, set the *max-time* to longer than the measurement interval. The contents of the serial buffer is retained as long as the ORB does not return to sleep.

The operation of the *max chars* option is similar to the *max time* setting except that the serial port stops sampling after a certain number of characters has been received. In most cases where the *max-chars* setting is used to terminate serial capture, the *max-time* setting is also used to end the serial measurement in the event that data does not arrive.

In *Serial capture mode*, in systems where many messages are sent and only a few are of interest, a *start*

string of up to 10 characters can be enabled. For instance, in a typical GPS serial NMEA feed, the following are a subset of available messages:

- DTM - Datum being used.
- GGA - Fix information
- GLL - Lat/Lon data
- GSA - Overall Satellite data
- GSV - Detailed Satellite data
- RMC - Recommended minimum data for GPS
- RTE - Route message
- VTG - Vector track an Speed over the Ground

If in the application, the user is only interested in receiving the GGA message, then a *start string* can be set to GGA. In that way, any messages starting with DTM, GLL, GSA or other unwanted messages will be discarded.

Note If a start string is enabled, the ORB will stay awake until the string is received or until the *max-time* is reached.

In firmware revisions less than 2, serial *start strings* are specified as text, with special characters such as carriage return and line feed being specified by their respective escape sequences. A list of allowable escape sequences is given below:

- \f Form-feed
- \n Newline (Line Feed)
- \r Carriage Return
- \t Horizontal Tab
- \v Vertical Tab
- \\ Backslash

Note Because escape sequences start with a backslash (\), if a capture string contains a backslash, it needs to be escaped and so is represented as a double backslash (\\).

In firmware release 2 and above, serial *start strings* are specified as text, with special characters such as carriage return and line feed being specified by their respective ASCII codes in hexadecimal. A list of example hexadecimal sequences is given below:

- \x0C Form-feed
- \x0A Newline (Line Feed)
- \x0D Carriage Return
- \x09 Horizontal Tab
- \x0B Vertical Tab
- \x08 Backslash

The change to the method used to represent special characters has been made to allow for all ASCII characters to be used, and to allow for hexadecimal data to be captured.

Note In firmware revisions 2 and lower, special characters are specified as escape characters. In revisions 2 and above, special characters are represented by their ASCII representations in hexadecimal.

In some serial protocols, the start of a packet is specified by a preceding period of inactivity on

the serial bus. The *Idle Time Before Start* parameter can be used to specify an idle time, which is exceeded will trigger the serial port to start capturing serial data.

Note If the serial port is capturing data and a subsequent idle time occurs, the capture process will restart and captured data will be discarded.

A serial capture *stop string* of up to 10 characters can also be provided. Again using the NMEA example, all NMEA messages end with a carriage return and line feed and so the serial capture *stop strings* in each case will be the same and will be "\r\n" or \x0D\x0A in revision 2 and above firmware. In most instances, the serial *stop strings* will be the same for all messages.

Note If a *start string* is specified without a *stop string*, or the *stop string* is never encountered, the serial port will capture characters until the *max-time* or *max-chars* is reached, the next measurement interval occurs or 256 characters are received.

An optional serial *request string* can be sent, on each measurement interval, to an external device. The purpose of the *request sting* is to request data from an external sensor or system. The *request string* can be a maximum of 10 characters and can be entered as text. Special characters like carriage return and line feed can be inserted using escape sequences or their ASCII representations as described earlier in the chapter.

The ORB implements the *MODBUS* communications protocol standard as a master, which enables communication with many slave devices connected to the network. The ORB can be configured to periodically request specific data from slave *MODBUS* devices on the network and transmit that data at specified intervals.

Up to twenty MODBUS data requests can be configured on the ORB; these data requests can either be from twenty individual slave devices or multiple requests from the same device. For each of the twenty data reads, the *slave address*, *function* and *register address* need to be specified. The *slave address* will be specified by the manufacturer of the device that is attached to the ORB; in some cases, slave devices allow their addresses to be configured. The *function* specifies the type of data to be read from the slave device. The ORB supports the following types of data reads:

- Disabled - the particular MODBUS channel is not used
- Read Coil - a 1 bit data value
- Read Discrete - a 1 bit data value
- Read Holding - a single 16 bit holding register
- Read Input - a 16 bit input register
- Read Holding (32 bits, Little Endian register order) - a 32 bit holding register
- Read Holding (32 bits, Big Endian register order) - a 32 bit holding register
- Read Input (32 bits, Little Endian register order) - a 32 bit input register
- Read Input (32 bits, Little Endian register order) - a 32 bit input register

Endianness is the order or sequence of bytes of digital data in computer storage and will be specified by the sensor that is being connected to the ORB.

A single MODBUS device may have multiple data values that can be read. The *register address* specifies which data the slave device needs to deliver.

In *MODBUS mode*, calibration can be applied so that the registers read by the ORB can be scaled to be in the units of what is being measured. For instance, a register that returns 0 to 255 may represent 0% humidity to 100% humidity. The ORB can be calibrated to take a number and to convert it to humidity in % and return that as the measured value.

In any system, the sensor and possibly the measured value will be subject to errors that may accumulate to reduce accuracy. In a system that uses the ORB to measure fluid volume in a 100 litre tank using a MODBUS sensor, the sensor may have offset errors such that with zero liquid in the tank, the ORB is showing a small volume. The ORB and sensor may also not be perfectly linear in that they

may not measure 1 litre in exactly the same way when the tank is empty versus when it is full. The tank itself may also not be perfectly manufactured and may, for instance have walls that are not perfectly straight. All of these errors could add together such that the final system is less accurate than expected. To achieve a more accurate system, a calibration can be performed. In this example, the tank could be calibrated by adding a small amount of liquid, say 10 litres (low Y) and noting the value reported by the ORB (low X). Now fill the tank by adding another 99 litres (high y) and note the value being reported by the ORB (high X). By filling the high and low X and Y values into the calibration constants associated with *analog mode*, offset and non-linearity errors can be eradicated, resulting in a much more accurate system.

In *MODBUS mode*, *warning* and *alarm* thresholds for can be set for each MODBUS channel. Once enabled, each time a measurement is completed, the returned value will be compared with minimum and maximum *warning* and *alarm* thresholds. If a *warning* or *alarm* level is breached, a message will immediately be transmitted. As long as the *warning* or *alarm* condition persists, messages will be transmitted at the exception-interval rather than the transmit-interval.

Note If calibration has been applied, then the warning and enable thresholds are in the calibrated units.

A full list of serial interface settings is given in the table at the end of the chapter.

6.3 Inputs

Pins 8 and 9 on the 12 way header are multi-purpose inputs. The inputs can be configured to measure analog voltages, where the value on the pin is measured; digital states that represent ON or OFF; frequency; duty cycle and count pulses. In analog and digital mode, pin 8 represents input 1 and pin 9 represents input 2.

Pin	Channel
8	Input 1
9	Input 2

The voltage present on the inputs should not exceed 72V. The inputs are protected against over-voltage events to 100V and against static discharge.

The equivalent input impedance of pins 8 and 9 is the same and is shown below. As far as DC circuits are concerned, any input connected to pin 8 or 9 will experience a 310kΩ resistance to ground. For analog measurements, a low-pass filter reduces high frequency noise, improving measurement accuracy.

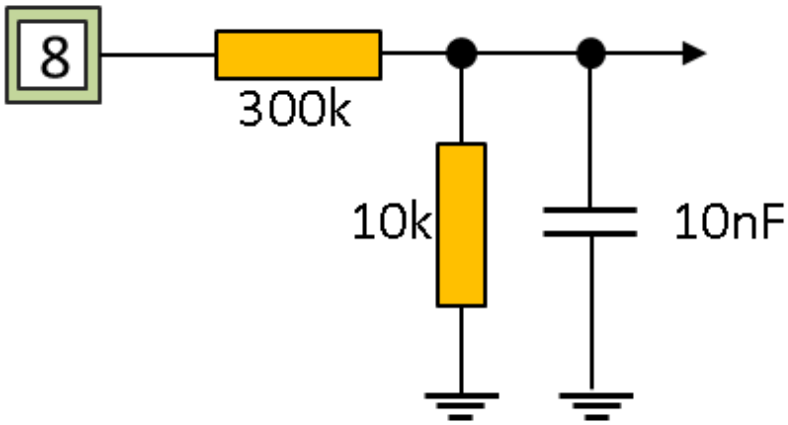

Figure 6.5. Equivalent circuit for inputs

Note The low pass filter is not applied when the input module is used to measure frequency and duty cycle.

6.3.1 Specification

Parameter for Analog and Digital measurements	Specification
Maximum input voltage	72V
Analog measurement accuracy	+-50mV
Input resistance (Input1)	182kΩ
Input resistance (Input2)	310kΩ
Input filter cutoff frequency	53Hz

Parameter for Frequency and Duty Cycle Measurement	Specification
Maximum input voltage	72V
Input resistance (Input1)	182kΩ
Minimum amplitude	3V (measured down to 1.7V but not guaranteed)
Minimum measureable frequency	1Hz (square wave, 3V minimum amplitude)
Maximum measureable frequency	10kHz (square wave, 3V minimum amplitude)
Frequency measurement resolution	1Hz
Frequency measurement accuracy	+-1Hz to 100Hz, +-10Hz to 10kHz
Maximum measurable duty cycle	100%
Minimum measureable duty cycle	1%
Duty cycle measurement resolution	1%
Duty cycle accuracy	+-1%

Minimum pulse duration for duty cycle measurement	10msec (1% of 1Hz)

Parameter for Pulse Counting	Specification
Maximum input voltage	72V
Input resistance (Input1)	182kΩ
Minimum amplitude	3V (tested down to 1.7V but not guaranteed)
Minimum frequency	0.01Hz (not tested lower)
Maximum measureable frequency	5kHz (square wave, 3V amplitude)
Minimum pulse duration for pulse counting	+100usec (tested to 20usec but not guaranteed)

6.3.2 Settings

Measurements can be scheduled as a multiple of the base-interval. The fastest possible measurement rate is achieved by setting the *interval* to 1 in which case measurements will occur on every base interval. To reduce power consumption, the measurement rate can be turned down by increasing the *interval*.

The mode selects the function of the input pin. Input 1 can be operated in *Digital*, *Analog*, *Frequency* and *Duty Cycle* modes; input 2 only has *Digital* and *Analog* modes.

Analog mode

Select *analog mode* if the input is a voltage that needs to be measured. Analog measurement should be used when interfacing with voltage-output sensors or when measuring a voltage, for instance when reporting on solar capacity. The maximum voltage that can be measured is 72V and the resolution is 50mV.

For maximum accuracy, and to allow for scaling of sensors, calibration can be applied in analog mode.

Digital mode

Select *digital mode* if the input typically has two levels and can be considered as ON or OFF. Digital mode is typically used when interfacing to a switch or a system that has two discrete voltages representing ON and OFF. An example of a signal with 2 discrete on and off voltage levels would be an ignition signal on a vehicle. In digital mode, the *threshold* at which an input is considered ON or OFF can be set between 0 and 72V in 100mV increments. For example, if the ORB is being used to detect an ignition signal in a 12V vehicle, the *threshold* could be set to 6 volts. In a system where the output is either 0 or 5 volts, the *threshold* could be set at 2.5 volts. Hysteresis can be applied to prevent false changes in state if the input voltage crosses the *threshold* slowly or in the presence of noisy inputs. In the example below, adding *hysteresis* prevents the output falsely showing as on as the noisy signal crosses the threshold. In digital mode, the hours that the input is above the threshold can be counted and used as an hour meter.

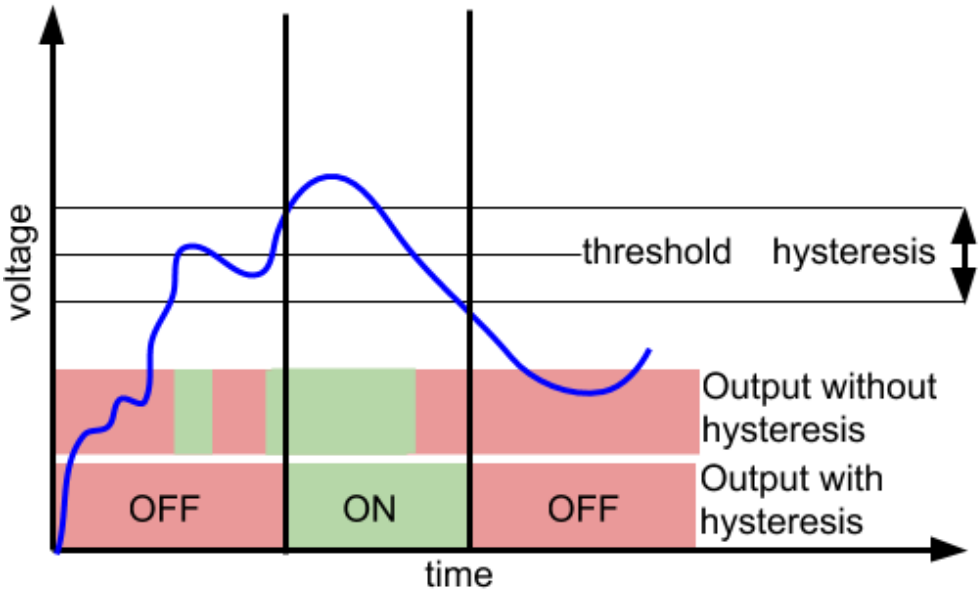

Figure 6.6. Hysteresis

Since the inputs on the ORB have a 310kΩ resistance to ground, if an external switch is placed between supply and the input, no additional circuitry is required. When the external switch is open, the 310k resistance will pull the input low. When the external switch is closed, the input will be driven high. Where there is no permanent power source, switches can be powered using one of the current loops. Connection to an external switch that is connected to system power is shown below.

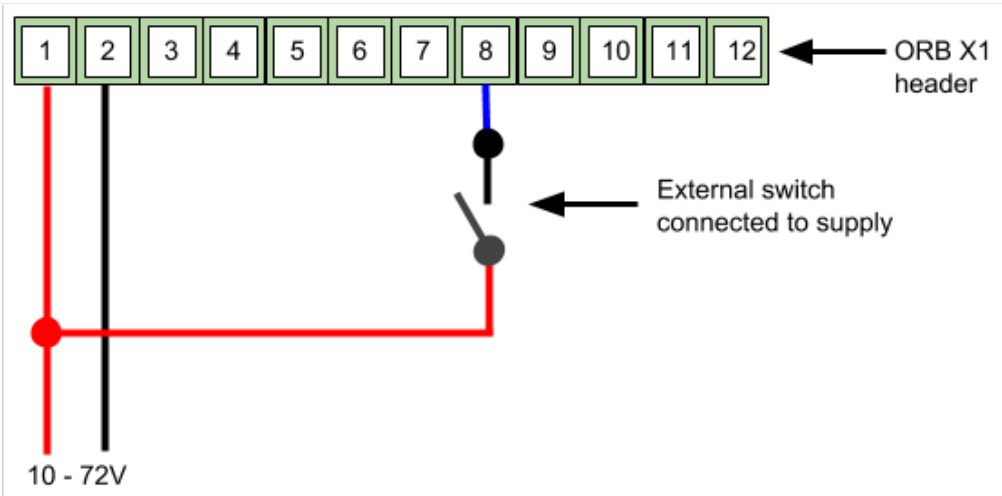

Figure 6.7. External switch connection when switch to positive

If an external switch is to be connected to ground, an external pullup resistor of less than 10kΩ is required between the pin to which the switch is connected and system power. Power to the pullup can also be provided using the internally generated switched power on either of the current source pins. When the switch is open , the external pullup drives the pin high. When the switch is closed, the pin is grounded. Connection to an external switch that is connected to ground is shown below.

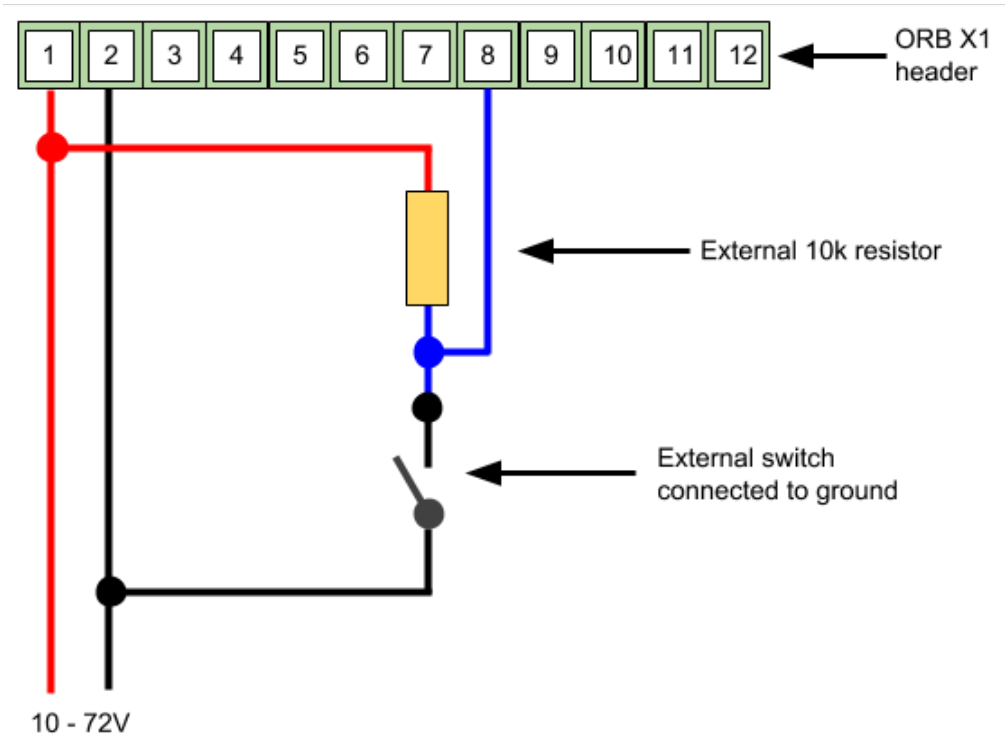

Figure 6.8. External switch connection when switch to ground

Note Connecting an external pullup resistor will increase current consumption when running of batteries and using the switched power output.

In digital mode, an *alert* can be generated when the input changes state. This may be useful, for instance where monitoring an alarm system to see if it is activated or not. Each time the system is activated or de-activated, an *alert* can be generated and transmitted

Input 1 has additional functionality that allows switch change of state detection whilst the ORB is in sleep state. This allows the ORB to remain in a very low power sleep state, to wake on switch level change and transmit the change of state. This functionality is not available on input 2.

Frequency mode

Input 1 has an additional mode that allows for the measurement of frequency. In *frequency mode*, on each measurement interval, the frequency of a signal on the pin is measured. Primary applications are speed, rpm and flow rate measurement.

In the diagram below, the ORB is configured to measure engine speed using an output from the P (pulse) terminal on an alternator.

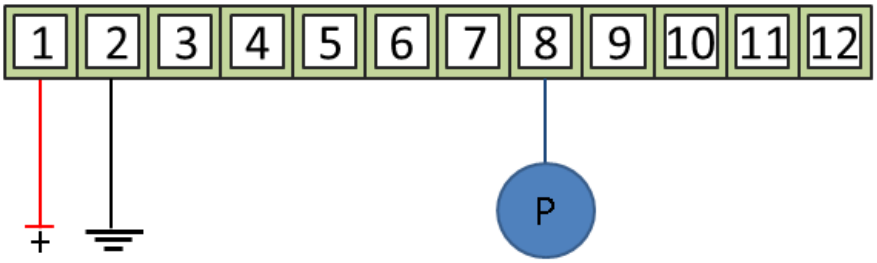

Figure 6.9. RPM measurement

Duty-Cycle mode

Input 1 has an additional mode that allows for the measurement of duty-cycle. In *duty-cycle mode*, on each measurement interval, the duty-cycle of a signal on the pin is measured. Sensors regularly use duty cycle to communicate percentage of full-scale; for instance, 0% duty cycle may represent 0% humidity and 100% duty-cycle may represent 100% humidity. In some sensors, 0% and 100% duty cycle represent error conditions.

Calibration

In *analog mode*, *frequency mode* and *duty-cycle mode*, calibration can be applied so that the measurement returned by the ORB is in the units of what is being measured. For instance, in *analog mode*, a voltage of 0 to 5V may represent 0% humidity to 100% humidity. The ORB can be calibrated to take a voltage measurement and to convert the measurement to humidity in % and return that as the measured value.

In any system, the measurement instrument (the ORB), the sensor and possibly the measured value will be subject to errors that may accumulate to reduce accuracy. In a system that uses the ORB to measure fluid volume in a 100 litre tank using a 4-20mA sensor, the ORB and sensor may have offset errors such that with zero liquid in the tank, the ORB is showing a small volume. The ORB and sensor may also not be perfectly linear in that they may not measure 1 litre in exactly the same way when the tank is empty versus when it is full. The tank itself may also not be perfectly manufactured and may, for instance have walls that are not perfectly straight. All of these errors could add together such that the final system is less accurate than expected. To achieve a more accurate system, a calibration can be performed. In this example, the tank could be calibrated by adding a small amount of liquid, say 10 litres (low Y) and noting the value reported by the ORB (low X). Now fill the tank by adding another 99 litres (high y) and note the value being reported by the ORB (high X). By filling the high and low X and Y values into the calibration constants associated with *analog mode*, offset and non-linearity errors can be eradicated, resulting in a much more accurate system.

Warnings and Alarms In *analog mode*, *frequency mode* and *duty-cycle mode*, *warning* and *alarm* thresholds for can be set. Once enabled, each time a measurement is completed, the returned value will be compared with minimum and maximum *warning* and *alarm* thresholds. If a *warning* or *alarm* level is breached, a message will immediately be transmitted. As long as the *warning* or *alarm* condition persists, messages will be transmitted at the exception-interval rather than the transmit-interval.

Note If calibration has been applied, then the warning and enable thresholds are in the calibrated units.

Pulse counting

In all modes, the number of pulses that have occurred since the ORB was last reset can be measured and reported. To enable the counting of pulses, enable the *pulse* option. If for instance, a flow-sensor is being used to deliver fuel to a vehicle, the instantaneous frequency would represent flow rate (pos-

siblyin litres per minute) and the number of pulses would represent the total amount of fuel delivered (possibly in litres). When *pulse* counting is enabled, the ORB remains awake, continuously monitoring the input in order to capture all the pulses that occur.

The count can be set to *reset* after a number of pulses have been counted. This may be useful, for instance if a sensor is measuring water in litres, and only kilolitre indications are required. In this case, a *pulse warning* level can be set at 1000 pulses at which time a transmission will be made and at the same time, the counter will be *reset*. One transmission will be made for each 1000 litres of water measured.

Note Because *pulse* counting keeps the input active, there will be an increase in power consumption.

In the diagram below, a flow sensor with integrated reed-switch is connected to input 1 to allow the number of pulses occurring to be measured.

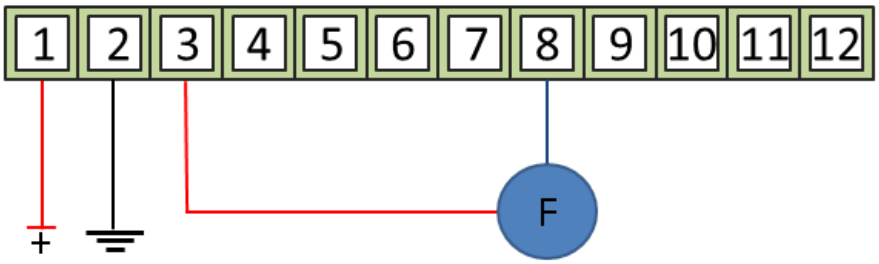

Figure 6.10. Flow sensor connection

A full list of settings for the inputs is given in the table at the end of this chapter.

6.4 Thermocouple Interface

The ORB-X1 has a thermocouple interface.

Pins 11 and 12 on the ORB header are specifically for connection to a thermocouple to allow temperature measurement. The positive terminal of a thermocouple, typically yellow for K-type, should be connected to pin 12 and the negative terminal, typically red, to pin 11. The thermocouple input is extremely sensitive and no other connections should be made except directly to thermocouples.

Warning Connection of anything to pins 11 or 12 except a thermocouple can result in permanent damage to the thermocouple input and potentially to the ORB as well.

Thermocouples come in various types. The ORB supports K, J, T, N, S, E, B and R-Type thermocouples. Typical temperature measurement accuracy is +-0.5°C with a resolution of 0.0625°C. Temperature measurement accuracy is guaranteed to be +-1.5°C accurate, based on an ambient temperature of between 0 to +85°C. Note that the temperature of the body being measured can be hotter it colder than 0 to +85°C; the 0 to +85°C range applies only to the ambient (air) temperature..

A thermocouple is comprised of at least two metals joined together to form two junctions. One is connected to the body whose temperature is to be measured; this is the hot or measuring junction. The other junction is connected to a body of known temperature (the terminal block in the ORB); this is the cold or reference junction. Therefore the thermocouple measures unknown temperature of the body with reference to the known temperature of the other body.

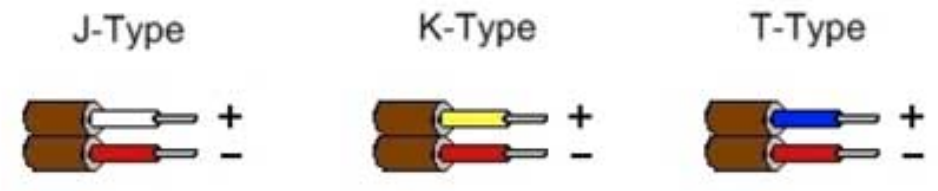

Figure 6.11. Typical thermocouple polarity

Note The negative terminal of a thermocouple is typically red. A thermocouple connected incorrectly may appear to work at some temperatures.

In the ORB, the ambient temperature accuracy (Cold junction accuracy) is typically +-0.5°C or a maximum of +-1.0°C over the ambient temperature range of 0 to +85°C.

The ORB is capable of measuring the hot junction to an accuracy of typically +-0.25°C or a maximum of +-0.5°C over the ambient temperature range 0 to +85°C and assuming the below thermocouple temperature ranges:

6.4.1 Specification

Parameter	Specification
Temperature accuracy	+-0.5°C (typical)
Temperature accuracy	+-1.5°C (0 to 85°C)
Resolution	+-0.0625°C
Hot junction accuracy	+-0.25°C (typical)
Hot junction accuracy	+-0.5°C (0 to 85°C)
Cold junction accuracy	+-0.5°C (typical)
Cold junction accuracy	+-1.0°C (0 to 85°C)

Thermocouple Type	Temperature range
Type K:	-200 to +1372°C
Type J:	-150 to +1200°C
Type T:	-200 to +400°C
Type N:	-150 to +1300°C
Type E:	-200 to +1000°C
Type S:	250 to +1664°C
Type B:	1000 to +1800°C
Type R:	250 to +1664°C

Thermocouple correction coefficients are derived from the National Institute of Standards and Technology (NIST) ITS-90 Thermocouple Database.

6.4.2 Settings

The ORB can be configured to use K, J, T, N, S, E, B and R-Type Thermocouples using the *type* setting. It is important to select the correct thermocouple type in order to maximise temperature measurement accuracy.

Measurements can be scheduled as a multiple of the base-interval. The fastest possible measurement rate is achieved by setting the *interval* to 1 in which case measurements will occur on every base interval. After each measurement, the ORB can be configured to compare the value to pre-set *warning* and *alarm* levels. To reduce power consumption, the measurement rate can be turned down by increasing

the *interval*.

Warning and *alarm* thresholds can be enabled. Once enabled, each time a measurement is completed, the returned value will be compared with minimum and maximum *warning* and *alarm* thresholds. If a *warning* or *alarm* level is breached, a message will immediately be transmitted. Hysteresis can be specified in 1°C increments, to prevent multiple alarms in the presence of noisy signals.

A full list of temperature sensor settings is given in the table at the end of this chapter.

6.5 CAN Bus Interface

The ORB-C1 has a CAN bus interface that can be used to read data from all kinds of vehicles and sensors that use CAN as their communications medium. Hundreds of sensors can be connected to a single CAN network.

In many cases, the protocol that is being used on the CAN bus is known, and so large volumes of understandable data can be extracted from all kinds of vehicles. Common CAN protocols include:

- J1939, the dominating CAN-based protocol for trucks and busses.
- ISO 11783, a J1939 flavor for agricultural tractors.
- ISO 11992, an interface between trucks and trailers.
- NMEA 2000, a protocol based on J1939 for marine use.
- CANopen, provides a standard for industrial machinery commonly used in industrial automation.

The ORB is compatible with the latest CAN Flexible-Data-rate (FD) specification.

Pins 11 and 12 on the ORB header provide the interface to a CAN network with pin 11 being CAN High (dominant high) and pin 12 being CAN Low (dominant low).

In CAN networks, 120Ω terminating resistors are found at each end of the network. In most systems, the terminating resistors will already be in place and will not be needed. In cases where a sensor network is being formed between an ORB and external sensor, a 120Ω resistor should be placed between the pins 11 and 12 on the ORB.

Warning In CAN bus systems, the ground supplied to the ORB must be the same ground as used by the CAN network. High differential voltages between the CAN lines and ground can damage the CAN interface.

6.5.1 Specification

Parameter	Specification
CAN High driver voltage (typical)	2.9V
CAN Low driver voltage (typical)	0.9V
Common mode voltage for reception (maximum)	+-25V
Absolute maximum voltage on CAN High and CAN Low	+-60V
Termination resistor	120Ω

6.5.2 Settings

Measurements can be scheduled as a multiple of the base-interval. The fastest possible measurement rate is achieved by setting the *interval* to 1 in which case the CAN network will be sampled on every base interval. To reduce power consumption, the measurement rate can be turned down by increasing the *interval*.

The ORB CAN bus supports can bit rates of 125, 250, 500 and 1000 bits per second as specified in

the *Nominal Baud Rate* field.

To ensure minimum intrusion on CAN systems, the ORB can be set to listen only. In this mode the ORB will only receive messages that are acknowledged on the bus by a listening node. Where required, the ORB can be made to acknowledge messages by selecting the *TX Enable* option.

A typical automotive CAN network will contain hundreds of messages, all with their own identifiers. The ORB can filter only the required messages by filling in the *ID Capture List*. Required identifiers should be entered in hexadecimal and should be separated by commas. When the ORB wakes for the next measurement interval, the CAN network will be sampled until all the messages listed have been found or the *Capture Time* has been reached. If multiple messages with the same identifier are required in a single measurement interval, place a * followed by the number of messages of that identifier to be returned after the identifier in the list. For example: 18FF20F2*4, 18FF36F0, 18FF1BF2*10 will return 18FF20F2 four times, 18FF36F0 once and 18FF1BF2 ten times. Leave the *ID Capture List* blank to receive all messages.

The *Capture Time* setting can be used to set a timeout after which the CAN bus will stop listening, allowing the ORB to transmit received messages and return to sleep. *Capture-time* can be used as a mechanism to allow the ORB to sample the CAN bus for a defined time-period.

A full list of CAN bus settings is given in the table at the end of this chapter.

6.6 Output

An open-collector output that can be made to switch to ground is provided on pin 10 of the header. The output is capable of sinking 450mA to ground and has an internal resettable fuse in place to prevent over-current events. The output is capable of switching coils and is therefore able to drive external relays and low power solenoids. The open circuit voltage applied to the output should not exceed system voltage or 72V.

As an alternate function, where additional inputs are required, the output can be configured as an analog or digital input.

Note There is a limit to the amount of energy that the protection circuit can absorb. For instance, shorting the output to power at 72V when the output is on will likely destroy the output.

The output is typically used to indicate warning and alarm conditions currently active and can be set to active in the event of a measurement returning an exception. When configured to do so, the buzzer or indicator lamp shown in the diagram below will turn on when a warning or alarm condition exists as pin 10 is switched to ground.

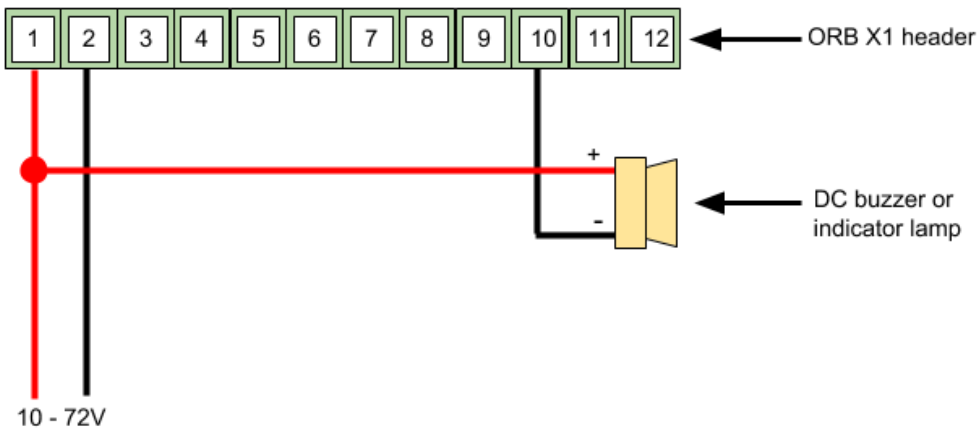

Figure 6.12. Using the output to drive a buzzer with permanent power

In solar or battery operated systems where permanent power is not available, externally powered current output sensors can utilise the ORB switched power source on pin 3 as shown below.

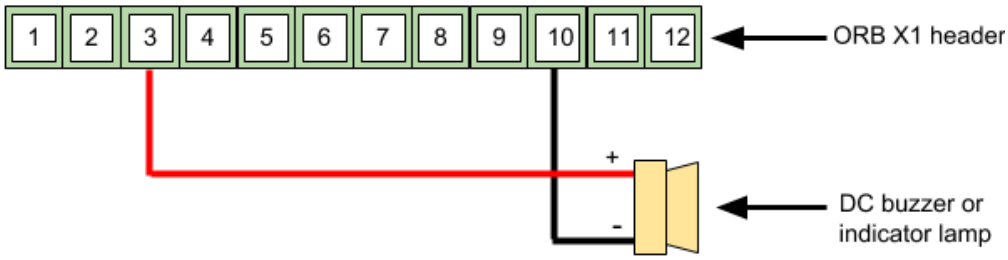

Figure 6.13. Using the output and internal power to drive a buzzer

6.6.1 Specification

Parameter	Specification
Maximum open circuit voltage	72V
Maximum hold current	450mA min
Minimum fuse current	550mA max
Digital input threshold	6V
Hysteresis	1V

6.6.2 Settings

The output can be scheduled to be configured at a multiple of the base-interval. In the event that the *Interval* is set to a number higher than 1, the output state will only checked and configured on the next output interval. This can be used to create a pulsed output that may be useful in driving alert indicators or in allowing attached devices to time to cool down.

The *Mode* setting can be used to configure the output with alternate functions as an analog or digital input. In input mode, the same settings as are associated with Input 2 apply except that the digital threshold and hysteresis are fixed.

The output can be configured to activate when any of the peripherals report an exception (*warning*, *alarm* or *alert*) as a result of a measurement and can be set to remain on only as long as the warning or alarm is active or to *hold* on for a time after the *warning* or *alarm* has gone away.

Note The output state will be configured at each output interval. The hold-time is how long the output is kept enabled after the exceptions are cleared.

A full list of settings for the output is given in the table at the end of this chapter.

6.7 External Sensor Settings

A full list of settings for external sensors is given in the table below.

Name	Item	Function	Range	Unit	Internal Reference
Input 1					
Name	text	A name for the input that is meaningful to the user.	25 chars		input1.name

Interval	integer	The number of base intervals after which the input is sampled. A value of 1 means that the input is collected every base interval. Set to 0 to disable.	0 to 10000		input1.interval
Mode	preset	Specifies the function of the IN1 terminal. The calibration, warnings and alarms are applied to this mode.			input1.mode
Digital 1					
Digital Threshold	decimal	A threshold against which the input is compared to determine if the input state is ON or OFF.	0 to 30	Volts	input1.digital.threshold
Digital Hysteresis	decimal	Once the input is in a certain state, hysteresis is the amount by which the input has to change before moving to the other state.	0 to 20	Volts	input1.digital.hysteresis
Count Hours	boolean	Counts the number of hours the digtial input is ON (above threshold).			input1.digital.count_hours
Digital Change Alert	boolean	Sets whether a change in digital state generates an alert.			input1.digital.alert.enable
Analog 1 Calibration	text	Calibration parameters for Analog 1. Refer to user guide.	30 chars		input1.cal
Unit	text	The unit of measure associated with the calibration. Examples: Litres/min, RPM, Volts			input1.unit
Warning	text	Warning thresholds. Refer to user guide.			input1.warning
Alarm	text	Alarm thresholds. Refer to user guide.			input1.alarm
Alarm/Warning Hysteresis	decimal	Once the input is in a certain state, hysteresis is the amount by which the input has to change before moving to the other state.			input1.hysteresis
Pulse Input					
Pulse Counting	boolean	Enables counting of pulses in addition to frequency measurement.			input1.pulse.enable
Reset Value	integer	The value at which the number of pulses counted on the input is reset to zero.	1 to 2000000000	Counts	input1.pulse.reset_value
Pulse Scaling	decimal	Multiplier to convert the pulse count to a useful unit.			input1.pulse.scaling
Pulse Unit	text	The unit of measure associated with the scaled pulse count. Eg: Litres			input1.pulse.unit
Pulse Warning	text	Warning thresholds. Refer to user guide.			input1.pulse.warning
Pulse Alarm	text	Alarm thresholds. Refer to user guide.			input1.pulse.alarm
Input 2					
Name	text	A name for the input that is meaningful to the user.	25 chars		input2.name
Interval	integer	The number of base intervals after which the input is sampled. A value of 1 means that the input is collected every base interval. Set to 0 to disable.	0 to 10000		input2.interval

Mode	preset	Specifies the function of the IN2 terminal. The calibration, warnings and alarms are applied to this mode.			input2.mode
Digital 2					
Digital Threshold	decimal	A threshold against which the input is compared to determine if the input state is ON or OFF.	0 to 30	Volts	input2.digital.threshold
Digital Hysteresis	decimal	Once the input is in a certain state, hysteresis is the amount by which the input has to change before moving to the other state.	0 to 20	Volts	input2.digital.hysteresis
Count Hours	boolean	Counts the number of hours the digtial input is ON (above threshold).			input2.digital.count_hours
Digital Change Alert	boolean	Sets whether a change in digital state generates an alert.			input2.digital.alert.enable
Analog 2 Calibration	text	Calibration parameters for Analog 2. Refer to user guide.	30 chars		input2.cal
Unit	text	The unit of measure associated with the calibration. Examples: Litres/min, RPM, Volts			input2.unit
Warning	text	Warning thresholds. Refer to user guide.			input2.warning
Alarm	text	Alarm thresholds. Refer to user guide.			input2.alarm
Alarm/Warning Hysteresis	decimal	Once the input is in a certain state, hysteresis is the amount by which the input has to change before moving to the other state.			input2.hysteresis
Output 1					
Name	text	A name for the input that is meaningful to the user.	25 chars		output1.name
Interval	integer	Does not affect output mode. The number of base intervals at which the input is sampled. Set to 0 to disable. Set to 1 for every base interval.	0 to 10000		output1.interval
Mode	preset	Specifies the function of the OUT1 terminal.			output1.mode
Warnings	boolean	Determines if the output is turned on when a warning is active.			output1.warnings
Alarms	boolean	Determines if the output is turned on when an alarm is active.			output1.alarms
Alerts	boolean	Determines if the output is turned on when an alert is active.			output1.alerts
Hold Time	integer	Sets the time in seconds for which the output is held on after it is triggered. If set to zero, the output remains on while any exceptions are active.		Seconds	output1.hold_time
Digital Change Alert	boolean	If enabled, a change in digital state will generate an alert.			output1.digital.alert.enable

Analog 3 Calibration	text	Calibration parameters for Analog 3. Refer to user guide.	30 chars		output1.cal
Unit	text	The unit of measure associated with the calibration. Examples: Litres/min, RPM, Volts			output1.unit
Warning	text	Warning thresholds. Refer to user guide.			output1.warning
Alarm	text	Alarm thresholds. Refer to user guide.			output1.alarm
Alarm/Warning Hysteresis	decimal	Once the input is in a certain state, hysteresis is the amount by which the input has to change before moving to the other state.			output1.hysteresis
Thermocouple 1					
Name	text	A name for the input that is meaningful to the user.	25 chars		tc1.name
Interval	integer	The number of base intervals after which the thermocouple is measured and events are checked. A value of 1 means that the input is collected every base interval. Set to 0 to disable.	0 to 10000		tc1.interval
Hysteresis	decimal	The amount by which the measured value has to drop below the threshold to re-enable the event.	-1000 to 1000	°C	tc1.hysteresis
Type	text	Determines the type of thermocouple connected. Valid values are: K, J, T, N, S, E, B and R	1 chars		tc1.type
Warning	text	Warning thresholds. Refer to user guide.	-1000 to 1000	°C	tc1.warning
Alarm	text	Alarm thresholds. Refer to user guide.	-1000 to 1000	°C	tc1.alarm
CAN 1					
Name	text	A name that is meaningful to the user.	25 chars		can1.name
Interval	integer	The number of base intervals after which the CAN module is turned on. Set to 0 to disable.	0 to 10000		can1.interval
Nominal Baud Rate	integer	Baud rate for CAN communication. Supported values are: 125, 250, 500, 1000		kbit/s	can1.nominal_baud
Capture Time	integer	The device will capture matching messages for this length of time.		Seconds	can1.capture_time
TX Enable	boolean	Allows the device to transmit and acknowledge messages on the CAN bus.			can1.tx_enable
ID Capture List	text	List of IDs to be captured in HEX format, separated by a comma eg: 18FEE60A. Leave blank to capture all.	200 chars		can1.id_list
Send Raw Data	boolean	If ticked, all captured messages will be added to the data message.			
Current Loop 1					
Name	text	A name for the input that is meaningful to the user.	25 chars		current1.name

Interval	integer	The number of base intervals after which the input is sampled. A value of 1 means that the input is collected every base interval. Set to 0 to disable.	0 to 10000		current1.interval
Mode	preset	Specifies the function of the SRC1 terminal.			current1.mode
Always On	boolean	Determines if Switched Power is to be enabled permanently.			current1.always_on
Start Time	decimal	Time in seconds that the output is turned on before measurements are taken. Allows an external device to stabilise.	0 to 3600	Seconds	current1.start_time
Digital Change Alert	boolean	Sets whether a change in digital state generates an alert. (Digital Mode Only)			current1.digital.alert.enable
Current 1 Calibration	text	Calibration parameters for Current 1. Refer to user guide.	30 chars		current1.cal
Unit	text	The unit of measure associated with the calibration. Examples: Percent, Pascals, Meters			current1.unit
Warning	text	Warning thresholds. Refer to user guide.			current1.warning
Alarm	text	Alarm thresholds. Refer to user guide.			current1.alarm
Alarm/Warning Hysteresis	decimal	The amount by which the calibrated current value has to drop below the threshold to re-enable the event.			current1.hysteresis
Current Loop 2					
Name	text	A name for the input that is meaningful to the user.	25 chars		current2.name
Interval	integer	The number of base intervals after which the input is sampled. A value of 1 means that the input is collected every base interval. Set to 0 to disable.	0 to 10000		current2.interval
Mode	preset	Specifies the function of the SRC2 terminal.			current2.mode
Always On	boolean	Determines if Switched Power is to be enabled permanently.			current2.always_on
Start Time	decimal	Time in seconds that the output is turned on before measurements are taken. Allows an external device to stabilise.	0 to 3600	Seconds	current2.start_time
Digital Change Alert	boolean	Sets whether a change in digital state generates an alert. (Digital Mode Only)			current2.digital.alert.enable
Current 2 Calibration	text	Calibration parameters for Current 2. Refer to user guide.	30 chars		current2.cal
Unit	text	The unit of measure associated with the calibration. Examples: Percent, Pascals, Meters			current2.unit
Warning	text	Warning thresholds. Refer to user guide.			current2.warning
Alarm	text	Alarm thresholds. Refer to user guide.			current2.alarm

Alarm/Warning Hysteresis	decimal	The amount by which the calibrated current value has to drop below the threshold to re-enable the event.			current2.hysteresis
Serial 1					
Name	text	A name for the input that is meaningful to the user.	25 chars		serial1.name
Interval	integer	The number of base intervals after which the serial port is turned on. Set to 0 to disable.	0 to 10000		serial1.interval
Type	preset	The electrical interface type.			serial1.type
Termination Resistor	boolean	This parameter enables the integrated termination resistor.			serial1.termination
Mode	preset	Describes how the serial port is to be handled. CAPTURE: serial data is captured between start and end characters. MODBUS: serial data is treated according to MODBUS RTU standard			serial1.mode
Baud Rate	integer	Baud rate for serial communication. Common values are: 4800, 9600, 19200, 38400, 57600, 115200			serial1.baud
Settings	text	A string describing the number of bytes: 7,8,9. Parity type: N(none), E(even), O(odd). Number of stop bits: 1 or 2. Typically: 8N1			serial1.settings
Capture					
Start String	text	The serial port starts reading data when it detects these characters. Example: $GPGGA, serial data will be ignored until $GPGGA is received after which data will be captured. If nothing is specified, the serial port will capture all data until the timeout period is reached.	32 chars		serial1.capture.start
Idle Time Before Start	integer	For a valid start condition, there must be this amount of idle time before receiving serial data. Additionally, the captured data will restarted if the serial port is idle for this time. Set to 0 to disable.	0 to 60000	Milliseconds	serial1.capture.start_idle_time
End String	text	Once capturing, if these characters are received, the serial port will stop capturing and will return to sleep. For binary data or escape sequences refer to the User Guide.	32 chars		serial1.capture.end
Request String	text	This string will be sent when the serial port is first turned on. Use this function to request data from a remote module.	32 chars		serial1.capture.request
Max Time	integer	The device will wait this length of time for a valid capture.		Seconds	serial1.capture.maxtime
Max Chars	integer	Maximum number of characters to be captured before the serial port goes back to sleep.			serial1.capture.maxchars

Alert on Capture	boolean	If checked an alert will be raised on any successful serial capture.			serial1.capture.alert
MODBUS RTU					
Slave Timeout	decimal	How long to wait for a response from each slave device.	0 to 10	Seconds	serial1.modbus.timeout
MODBUS 1					
Modbus 1 Name	text	A meaningful name for Modbus Channel 1.	25 chars		mod1.name
Modbus 1 Settings	text	Settings for Modbus Channel 1. Refer to user guide.	18 chars		mod1.settings
Modbus 1 Calibration	text	Calibration paramters for Modbus Channel 1. Refer to user guide.	30 chars		mod1.cal
Modbus 1 Unit	text	The unit of measure associated with the calibration. Examples: Percent, L/hr, Meters			mod1.unit
Warning	text	Warning thresholds. Refer to user guide.			mod1.warning
Alarm	text	Alarm thresholds. Refer to user guide.			mod1.alarm
MODBUS 2					
Modbus 2 Name	text	A meaningful name for Modbus Channel 2.	25 chars		mod2.name
Modbus 2 Settings	text	Settings for Modbus Channel 2. Refer to user guide.	18 chars		mod2.settings
Modbus 2 Calibration	text	Calibration paramters for Modbus Channel 2. Refer to user guide.	30 chars		mod2.cal
Modbus 2 Unit	text	The unit of measure associated with the calibration. Examples: Percent, L/hr, Meters			mod2.unit
Warning	text	Warning thresholds. Refer to user guide.			mod2.warning
Alarm	text	Alarm thresholds. Refer to user guide.			mod2.alarm
MODBUS 3					
Modbus 3 Name	text	A meaningful name for Modbus Channel 3.	25 chars		mod3.name
Modbus 3 Settings	text	Settings for Modbus Channel 3. Refer to user guide.	18 chars		mod3.settings
Modbus 3 Calibration	text	Calibration paramters for Modbus Channel 3. Refer to user guide.	30 chars		mod3.cal
Modbus 3 Unit	text	The unit of measure associated with the calibration. Examples: Percent, L/hr, Meters			mod3.unit
Warning	text	Warning thresholds. Refer to user guide.			mod3.warning
Alarm	text	Alarm thresholds. Refer to user guide.			mod3.alarm
MODBUS 4					
Modbus 4 Name	text	A meaningful name for Modbus Channel 4.	25 chars		mod4.name
Modbus 4 Settings	text	Settings for Modbus Channel 4. Refer to user guide.	18 chars		mod4.settings
Modbus 4 Calibration	text	Calibration paramters for Modbus Channel 4. Refer to user guide.	30 chars		mod4.cal

Modbus 4 Unit	text	The unit of measure associated with the calibration. Examples: Percent, L/hr, Meters			mod4.unit
Warning	text	Warning thresholds. Refer to user guide.			mod4.warning
Alarm	text	Alarm thresholds. Refer to user guide.			mod4.alarm
MODBUS 5					
Modbus 5 Name	text	A meaningful name for Modbus Channel 5.	25 chars		mod5.name
Modbus 5 Settings	text	Settings for Modbus Channel 5. Refer to user guide.	18 chars		mod5.settings
Modbus 5 Calibration	text	Calibration paramters for Modbus Channel 5. Refer to user guide.	30 chars		mod5.cal
Modbus 5 Unit	text	The unit of measure associated with the calibration. Examples: Percent, L/hr, Meters			mod5.unit
Warning	text	Warning thresholds. Refer to user guide.			mod5.warning
Alarm	text	Alarm thresholds. Refer to user guide.			mod5.alarm
MODBUS 6					
Modbus 6 Settings	text	Settings for Modbus Channel 6. Refer to user guide.	18 chars		mod6.settings
Modbus 6 Calibration	text	Calibration paramters for Modbus Channel 6. Refer to user guide.	30 chars		mod6.cal
MODBUS 7					
Modbus 7 Settings	text	Settings for Modbus Channel 7. Refer to user guide.	18 chars		mod7.settings
Modbus 7 Calibration	text	Calibration paramters for Modbus Channel 7. Refer to user guide.	30 chars		mod7.cal
MODBUS 8					
Modbus 8 Settings	text	Settings for Modbus Channel 8. Refer to user guide.	18 chars		mod8.settings
Modbus 8 Calibration	text	Calibration paramters for Modbus Channel 8. Refer to user guide.	30 chars		mod8.cal
MODBUS 9					
Modbus 9 Settings	text	Settings for Modbus Channel 9. Refer to user guide.	18 chars		mod9.settings
Modbus 9 Calibration	text	Calibration paramters for Modbus Channel 9. Refer to user guide.	30 chars		mod9.cal
MODBUS 10					
Modbus 10 Settings	text	Settings for Modbus Channel 10. Refer to user guide.	18 chars		mod10.settings
Modbus 10 Calibration	text	Calibration paramters for Modbus Channel 10. Refer to user guide.	30 chars		mod10.cal

Chapter 7

Network Connection

The ORB can communicate with the Senquip Portal or a remote server via Wi-Fi or 4G LTE. Where both Wi-Fi and 4G LTE networks are selected, the ORB will first attempt to connect via Wi-Fi and if that is unsuccessful, the ORB will then attempt to connect via 4G LTE. In the event that neither Wi-Fi or 4G LTE networks can be found, the ORB can be set to log data to internal memory and then upload it when a network becomes available (see *Endpoint* settings).

7.1 Wi-Fi Specification

Wi-Fi on the ORB is used to transmit data, to allow settings to be remotely updated, to allow in-field software updates and also to enable setup via an integrated web-server that can be accessed in setup mode via a mobile phone or other Wi-Fi device.

The ORB Wi-Fi implementation supports Wi-Fi 802.11 b/g/n. The Wi-Fi antenna is integrated into the ORB. In typical applications, the range achievable with Wi-Fi is 500m.

7.2 4G LTE Specification

4G LTE on the ORB is used to transmit data, to allow settings to be remotely updated and to allow in-field software updates.

The ORB 4G LTE implementation is designed for global use and supports Cat-M1 and CAT-1 in the following bands:

Device	LTE Category	Bands
ORB-xx-G	CAT-M1 EGPRS	B1/B2/B3/B4/B5/B8/B12/B13/B18/B19/B20/B26/B28/B39 850/900/1800/1900MHz
ORB-xx-H	CAT-1 GSM / EDGE	B1/B3/B7/B8/B20/B28 B3/B8

The 4G LTE antenna is integrated into the ORB.

7.3 Connecting to a Wi-Fi Network

Once in setup mode, use the Network page to connect the ORB to a Wi-Fi network.

On the Network page, press the Scan for Wi-Fi Networks button. After a few seconds, a list of SSIDs for visible Wi-Fi networks will be shown. Select the Wi-Fi network to which you would like to connect by selecting the SSID from the list. The SSID will automatically be copied to the Wi-Fi SSID field and you will be prompted for the network password. After entering the password, press Save Settings. You will be prompted to restart the device; settings will only be applied after a restart. To continue

with setup, press *CANCEL* or to restart and apply your settings, press *OK*.

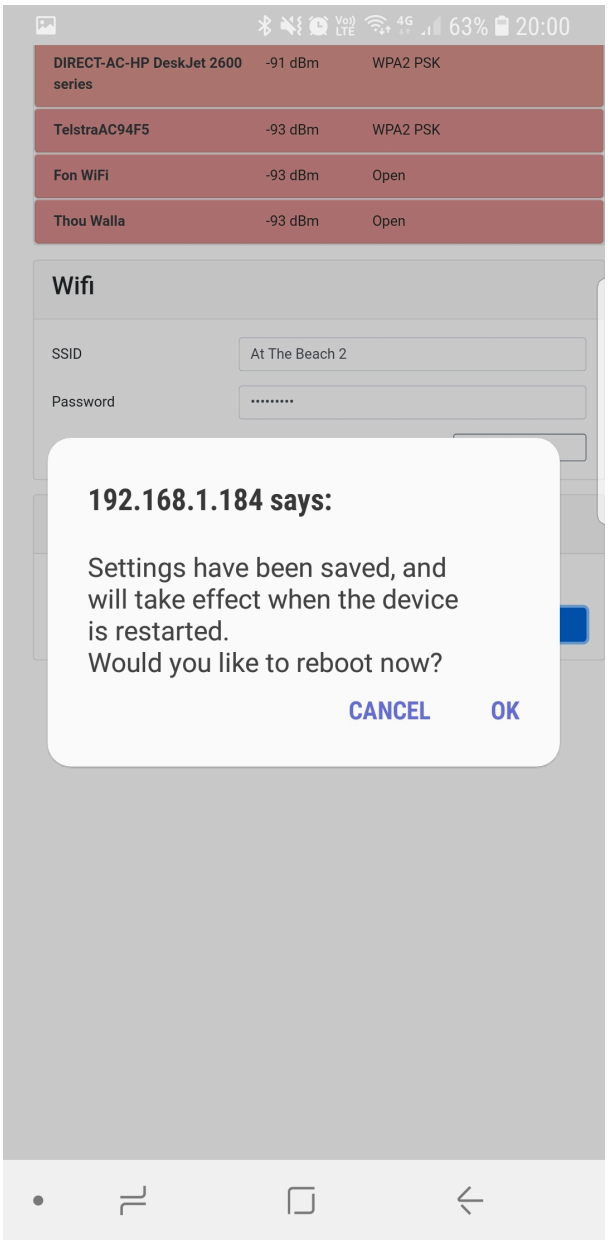

Figure 7.1. Save changes and reboot

After a reboot, the ORB will attempt to connect to the specified Wi-Fi network. You can check if the ORB has successfully connected to the chosen network by placing the ORB in setup mode and returning to the Network page. At the top of the page, the current network status will be shown. Note the IP address that your Wi-Fi modem has allocated to the ORB; you can use this address to access the ORB directly on your WiFI network.

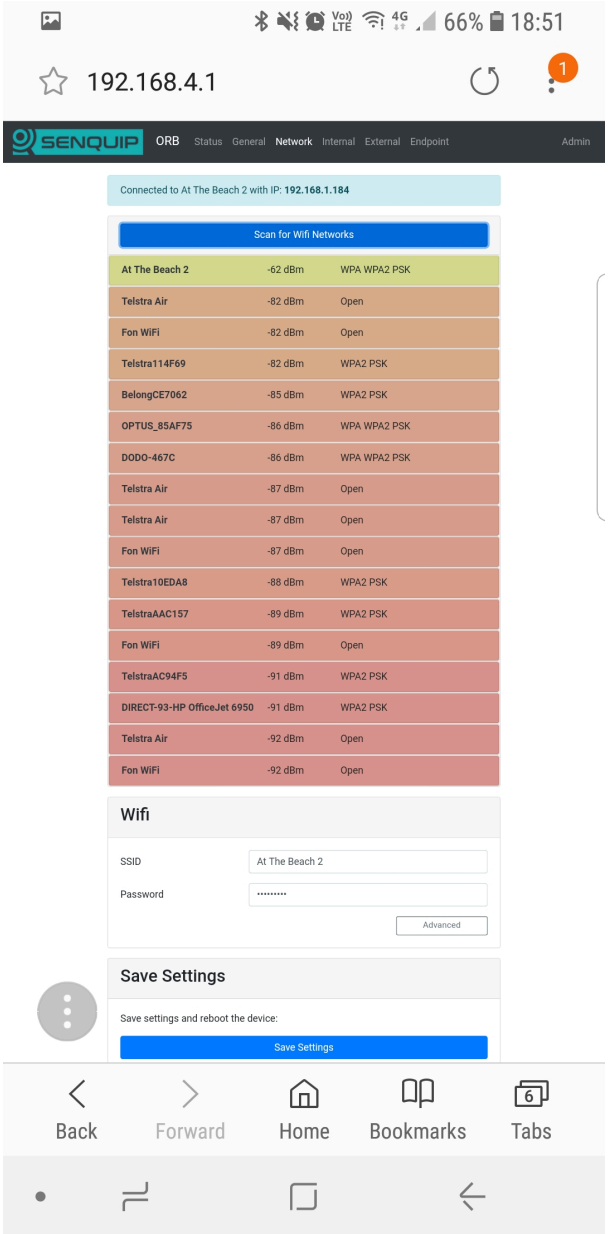

Figure 7.2. Note the IP address on your network

Further Wi-Fi settings are available by selecting the Advanced option. Once selected, a static IP address, netmask, gateway and DNS server can be specified.

The integrated web-server is normally only active in setup mode; it can however be made to be always on by setting the web setting to ON. This may be an advantage in systems where permanent power is available and the user wants to be able to make remote changes directly on the ORB without having to access the Senquip Portal. Keeping the web-server active will require that the ORB remain awake at all times but does mean that the user can make instant changes to settings and see the latest measured data.

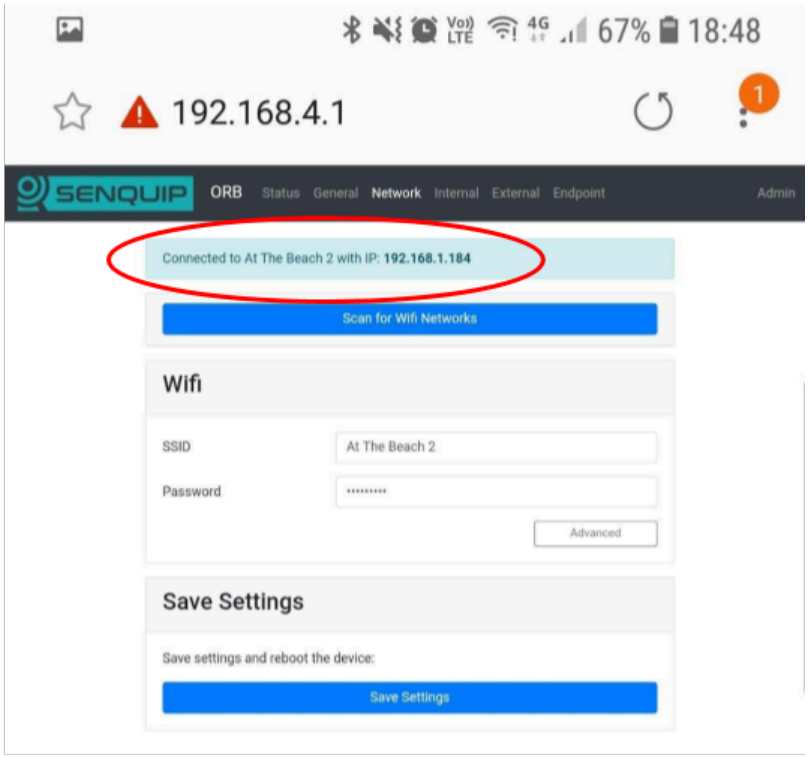

Figure 7.3. Access via local IP

When connected to a Wi-Fi network, the ORB may need to be able to make outgoing connections to remote services. To allow the ORB to make connections, some ports need to be enabled for outgoing connections on your Wi-Fi network.

Function	Port Number	Description
NTP Time	123	To be able to correctly timestamp measured data and for certain encryption functions the ORB needs to know time accurately. Time is accessed by connecting to an NTP server on this port.
MQTT to Senquip Portal	8883	Secure communications with the Senquip Portal are established on this port.
OTA update	80, 443	Over the Air (OTA) is a method by which the ORB software can be remotely updated. To enable remote software upgrades of the ORB software, outgoing connections need to be enabled on this port.

7.3.1 Wi-Fi Settings

A full list of Wi-Fi settings is given in the table at the end of the chapter.

7.4 Connecting to a 4G LTE Network

Once in setup mode, use the Network page to connect the ORB to a 4G LTE network.

In most cases only a 4G LTE network name and APN will be required to establish a 4G LTE connection. Some service providers will require a username and password and some SIM cards will require a pin. If these are not needed, leave them blank.

Once configured, press the check network button. If a connection is successful, the signal strength of

the 4G LTE connection will be shown. Use the signal strength to optimise the mounting position.

RSSI	Signal Strength	Meaning
0	-113dBm or less	Signal strength poor
1	-111dBm	Signal strength poor
2...30	-109... -53dBm	Medium signal strength
31	-51dBm or greater	Signal strength excellent

7.4.1 4G LTE Settings

A full list of 4G LTE settings is given in the table at the end of the chapter.

7.5 Network Settings

A full list of network settings is given in the table below.

Name	Item	Function	Internal Reference
Wi-Fi			
Wifi	boolean	Connect to existing Wifi connection specified below.	wifi.sta.enable
SSID	text	Wifi SSID to connect to.	wifi.sta.ssid
Password	password	Wifi password to use for connection.	wifi.sta.pass
Static IP Address	text	Leave blank if assigned by DHCP.	wifi.sta.ip
Static Netmask	text	Leave blank if assigned by DHCP.	wifi.sta.netmask
Static Gateway	text	Leave blank if assigned by DHCP.	wifi.sta.gw
DNS Server	text	Leave blank if assigned by DHCP.	wifi.sta.nameserver
GSM			
GSM	boolean	Enable the GSM connection.	gsm.enable
APN	text	Access Point Name of mobile operator	gsm.apn
Username	text	Username for data connection. Leave blank if not specified	gsm.user
Password	text	Password for data connection. Leave blank if not specified	gsm.pass

Chapter 8

Endpoint Setup

When connected via Wi-Fi or 4G LTE, data measured by a Senquip ORB can be sent to the Senquip Portal or a remote server or SCADA system, using UDP, HTTP, HTTPS, MQTT and MQTTS. The endpoint settings allow for configuration of the end server detail and the protocol used to communicate with that server.

8.1 Data Security

Devices that connect to company networks and the internet need to be properly secured to mitigate risks and protect organisations from malicious cyber-attacks. Senquip takes the challenge of cyber-security seriously and utilises public-key-infrastructure as a part of their security solution to create a unique, trusted and protected identity for every ORB.

Public Key Infrastructure certificates are an important part of developing a complete security solution. By authenticating devices, encrypting confidential data, and maintaining data and system integrity, certificates establish online trust and reliable security.

Authentication: Certificates for devices validate identities to make sure only authorized users, messages, or other types of servers have access to the device.

Encryption: A certificate creates an encrypted link and allows information to be transmitted privately.

Integrity: Certificates make sure that any messages or data transferred to and from ORBs are not altered.

To ensure the highest levels of each of the three levels of trust, Senquip uses a NIST validated, ultra-secure hardware crypto-element for key and certificate storage and cryptographic processing. The crypto-element is pre-loaded with certificates for Amazon Web Services (AWS), allowing for immediate, out-of-the box, secure communication with the Senquip Portal. Users can load additional certificates to allow secure communications with other servers, using the Senquip Portal.

Note For volume applications, Senquip can supply the ORB pre-loaded with additional certificates.

8.2 Data Format

Data that is transmitted by the ORB to a remote server is formatted in JSON format. JSON (JavaScript Object Notation) is a lightweight data-interchange format. It is easy for humans to read and write and it is easy for machines to parse and generate. It is based on a subset of the JavaScript Programming Language, Standard ECMA-262 3rd Edition - December 1999. JSON is a text format that is completely language independent but uses conventions that are familiar to programmers of the C-family of languages, including C, C++, C#, Java, JavaScript, Perl, Python, and many others. These properties make JSON an ideal data-interchange language.

JSON is built on two structures:

- A collection of name/value pairs. In various languages, this is realized as an object, record, struct, dictionary, hash table, keyed list, or associative array.
- An ordered list of values. In most languages, this is realized as an array, vector, list, or sequence.

An example data JSON packet as sent by the ORB is shown below:


```
{
 "deviceid": "4299A5340",
 "humidity": 70.51,
 "vlipo": 4.13,
 "vbat": 2.17,
 "vin": 20.09,
 "analog1": 4.08,
 "digital2": 0,
 "roll": 37.57,
 "pitch": -89.28,
 "angle": 37.57,
 "pressure": 100.4,
 "ambient": 30.4,
 "alarms": {
  "pitch": [
   "Low"
  ],
  "tc1": [
   "Out of Range"
  ]
 },
 "ts": 1544665316.3,
 "tsformat": "13/12/2018 01:41:56"
}
```


Figure 8.1. Example JSON data packet

Users of the Senquip Portal do not need to understand the data format; data can be viewed on the Senquip Portal numerically or graphically or can be downloaded in spreadsheet format.

For users who are sending data to third party servers that require data in a format other that JSON, arbitrary data formats can be scripted on the Senquip device. Application notes are provided that detail the scripting of custom data packet formats for connection to common third party platforms. Further information on scripting for Senquip devices can be found in the Senquip Scripting Guide.

8.3 Data Buffer

Where neither Wi-Fi or 4G LTE networks can be found, the Senquip ORB can store up to 1 MByte of messages for devices running SFW001 firmware and 2MByte for devices running SFW002 firmware, to internal memory for later transmission when a network becomes available. When the internal memory is full, the device stop logging. Once network connectivity is established, the most recently stored data will be transmitted first.

8.4 UDP

Data can be sent via raw UDP to a fixed IP address and port. This method is only suitable for a local network Wi-Fi connection as the data is not encrypted and there is no authentication. Raw UDP also provides no acknowledgment that data was received.

8.5 HTTP

An HTTP session is a sequence of network request-response transactions. The ORB initiates a request by establishing a HTTP connection on a particular port on a client server (typically port 80, occasionally port 8080).

8.6 HTTPS

HTTPS is the secure version of HTTP and is sometimes referred to HTTP over TLS. The 'S' at the end of HTTPS stands for 'Secure'. It means all communications between your browser and the website are encrypted. Wherever possible, HTTPS should be used as an alternative to HTTP.

HTTPS requires that the certificate-authority (CA) certificate of the destination be loaded onto the ORB.

Note for volume applications, the ORB can be pre-configured with CA certificates to allow secure communications with a customer server.

8.7 MQTT

MQTT is a secure machine-to-machine (M2M) Internet of Things connectivity protocol specifically designed for low data-rate applications and is perfect for implementation on the ORB. MQTT is the protocol used when the ORB communicates with the Senquip Portal and is also supported by many open source IoT platforms such as Thingsboard.

Note The ORB can maintain concurrent MQTT connections to the Senquip portal and a customer server or SCADA system.

Consideration must be given to data security on open networks. In applications where data security is critical, the use of MQTTS with encryption and authentication should be considered.

8.8 MQTT over TLS

MQTT over TLS (MQTTS) adds enhanced security as all data is encrypted and secured with SSL certificates. Most business grade IoT platforms such as AWS (Amazon Web Services) offer MQTTS.

MQTTS is recommended by Senquip as the preferred protocol for use with the ORB as it offers a low power, reliable, secure connection. The ORB is pre-loaded with certificates allowing secure communication with the Senquip Portal.

Note For volume applications, the ORB can be pre-configured with additional certificates to allow secure communications with a customer server or SCADA system.

8.9 Settings

UDP, *TCP* and *HTTP* connections require an IP address of the host server and a port on which the host server is listening. Secure protocols like *MQTTS* and *HTTPS* require certificates to be loaded on the ORB. The ORB is pre-loaded with certificates that allow connection to the Senquip Portal that is hosted on Amazon Web Services. Certificates for customer servers can be uploaded using the Senquip Portal.

All messages are time-stamped using the UNIX time standard. Unix time (also known as POSIX time or UNIX Epoch time) is a system for describing a point in time, defined as the number of seconds that have elapsed since 00:00:00, Thursday, 1 January 1970. Every day is treated as if it contains exactly 86400 seconds, so leap seconds are not applied. UNIX time is used to timestamp messages as it is used widely in Unix-like and many other operating systems and file formats.

The ORB automatically updates time by accessing a Network Time Protocol (NTP) server. By default the device will get the time via NTP from pool.ntp.org, on whatever network connection is available (Wi-Fi or 4G LTE). It does this if the time is not valid, for instance, after a reset, and then every 12 hours thereafter. Between updates, time is kept with a high precision real-time clock that is powered by the internal LiPo battery.

Although UNIX time is easy for computer systems to use, it is not easily human readable. If a human readable time-stamp is required, set the *timestamp* setting to ON, in which case, the ORB will insert an additional time and date field, formatted in human readable format, as below:

DD/MM/YYYY, hh:mm:ss for example: 27/06/2018, 17:30:15

Time is UTC (coordinated universal time); no offsets are applied for local time-zones on the ORB. The Senquip Portal will apply local time offsets as specified by the settings on your computer.

The Senquip Portal can be used to update settings on the ORB remotely. Each time the ORB makes contact with the Senquip Portal (for example to transmit measurements), the ORB will check for any settings changes. If there are changes to settings, these will be downloaded and applied. Pending configuration changes are listed on the settings pages on the Senquip Portal.

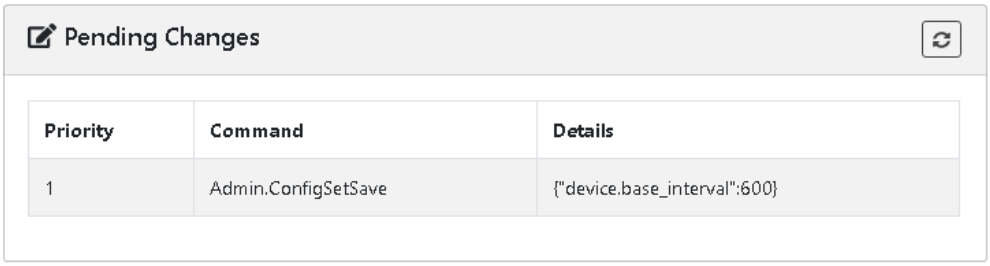

Figure 8.2. Pending change where the base interval has been changed to 600 seconds

If the ORB is configured to send data to a 3rd party server, the ORB will by default contact the Senquip Portal to check for settings updates once a day. Set the *Configuration via Senquip Portal* to OFF to prevent the ORB from contacting the Senquip Portal to check for settings. This setting may be used where power consumption is critical such as when AA batteries are being used an a very long battery life is required.

> **Warning** Disabling *Configuration via Senquip Portal* will mean that no settings or firmware updates will be able to be performed remotely using the Senquip Portal.

A full list of endpoint settings is given in the table below.

Name	Item	Function	Internal Reference
Data Endpoints			
Configuration via Senquip Portal	boolean	Enables connection to Senquip Portal for remote configuration.	endpoint.config_to_portal
Send Data to Senquip Portal	boolean	Enables data from the device to be sent to the Senquip Portal.	endpoint.data_to_portal
Offline Buffer	boolean	Save data if device is offline, and send when network is available.	endpoint.buffer_enable
Add Formatted Time	boolean	This option adds a human readable time/date format to the data output.	endpoint.addtimedate
Report Network Info	boolean	Add network details and signal strength to data output.	endpoint.network_report
UDP			
UDP	boolean	Enables sending data over UDP to specified address below.	endpoint.udp.enable
UDP Address	text	Address and port to send data to.	endpoint.udp.address
HTTP			
HTTP POST	boolean	Enables sending data via a HTTP POST request to address below.	endpoint.http.enable
HTTP Address	text	Destination address and port for HTTP POST request.	endpoint.http.address
MQTT			
MQTT	boolean	Enables sending data to a MQTT broker.	endpoint.mqtt.enable
Broker Address	text	MQTT Broker Address and Port.	endpoint.mqtt.server
Client ID	text	Client ID to send to the broker. Defaults to device.id if left blank.	endpoint.mqtt.client_id
Username	text	Username for MQTT authentication with username/password. (Optional)	endpoint.mqtt.user
Password	text	Password for MQTT authentication with username/password. (Optional)	endpoint.mqtt.pass

Chapter 9

Senquip Portal

The Senquip Portal is Senquip's secure cloud solution that is powered by Amazon Web Services (AWS). The portal allows for:

- numerical and graphical viewing of current data,
- long term data storage,
- remote modification of settings,
- remote updates to firmware,
- event forwarding,
- user account management.

By default, access to the Senquip Portal is enabled; it is highly recommended that users retain this setting. If disabled, device settings may not be able to be changed remotely and important firmware changes will not be able to be performed. Two instances where access to the portal may disabled are in very power battery operated applications and where the device is connected to an alternate server.

Warning Disabling communication with the Senquip Portal will mean that no settings or firmware updates will be able to be performed remotely using the Senquip Portal.

Connection with the Senquip Portal is achieved using an MQTT connection. To ensure the highest levels data security, Senquip uses a NIST validated, ultra-secure hardware crypto-element for key and certificate storage and cryptographic processing. The crypto-element is pre-loaded with certificates for AWS, allowing for immediate, out-of-the box, secure communication with the Senquip Portal.

9.1 Using the Senquip Portal

This section describes the various features of the Senquip Portal and how to use them.

9.1.1 Login to the Senquip Portal

The Senquip Portal can be accessed at: https://portal.senquip.com/. At the welcome page, you will need to *Login* or *Sign Up* to access the portal. If you choose sign-up, you will be asked for your email address, name and a password.

Note Password must be at least 8 characters and contain uppercase letters, lowercase letters and numbers.

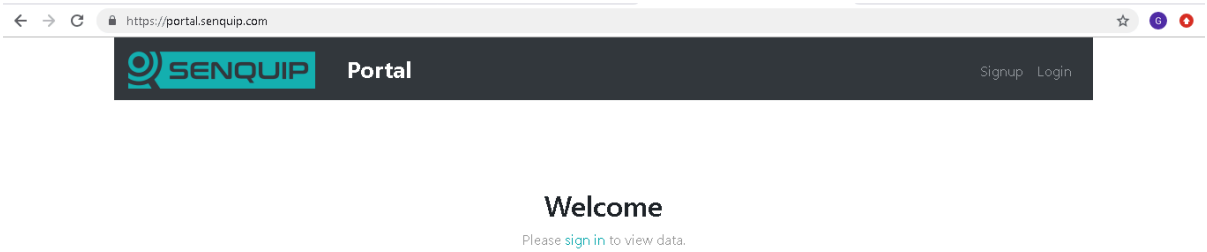

Figure 9.1. Welcome to the Senquip Portal

9.1.2 Device summary

Once logged-in, on the summary page, a list of all devices associated with your account is shown. From the summary page, new devices can be added to your account, and can be grouped into logical categories. Where GNSS on a device is enabled, that device will be shown on a map below the list of devices. Note that where exceptions are present, they will be shown in the *Events* column; to see detail on the exceptions, select the device. In the *Contact* column, the time since last successful contact is shown; use this column to check that all devices are communicating as expected.

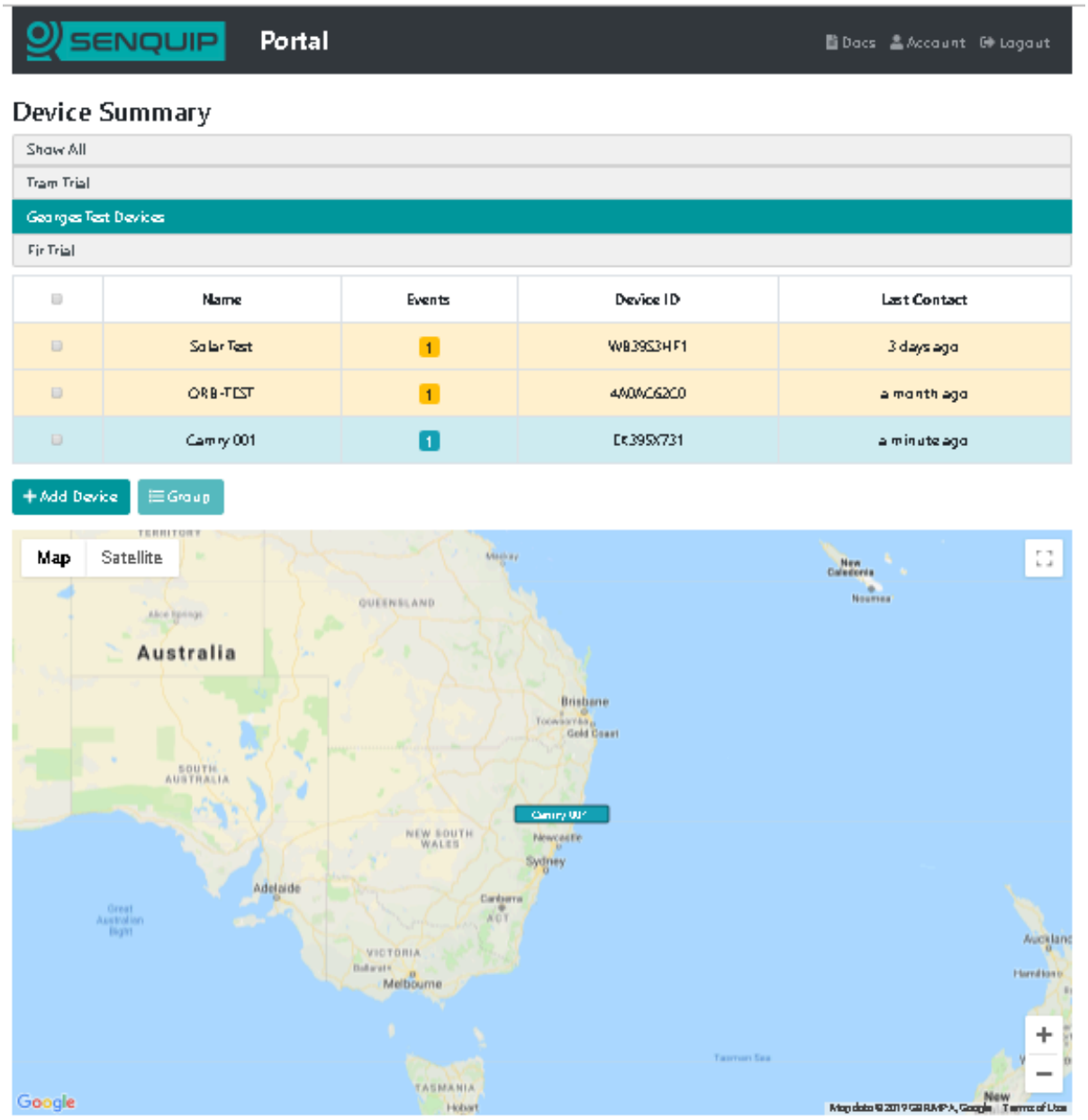

Figure 9.2. View or add Senquip devices

To add a device, click on the *+Add Device* button. You will be asked for the ID and password associated with the Senquip device. Enter the details and press *Submit*. The device will be added to the list of devices available on your user.

Note The Device ID should look something like 7DA540190.

9.1.3 View device data

View the data associated with a Senquip device by clicking on the device *Name* or *Device-ID*. After a few seconds, a dashboard associated with the selected device will appear. The dashboard is user customisable in the following ways:

- Widgets can be turned off so that they do not show on the dashboard.
- Widgets can be re-ordered to change the order in which they are displayed.