Wireless webcam

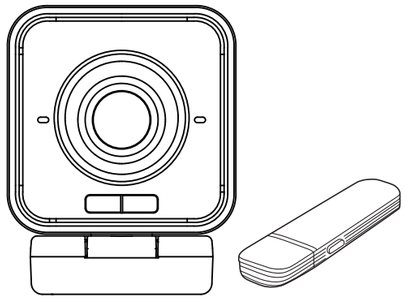

Thank you for purchasing the wireless Webcam "The product" (here in after referred to as "this product"). This user manual describes how to use this product and precautions for safe handling. Please read carefully before use. Please keep this user manual in a safe place even after reading it.

Please check first

Before using, please make sure that you have all the stuff in the pack list. If you find something missing, please contact the store where you purchased it.

Pack List

1.Wireless Webcam x 1pc
2. Charging cable x 1pc
3.USB Receiver x 1pc
4. User manual x1 pc

The contents of this user manual are subject to change without notice. Design and specifications for improvement are subject to change without notice

Warranty provisions

1, We guarantee the quality only when the product is used under normal conditions within the warranty period. In the unlikely event that there is a failure within the warranty period, we will repair it free of charge by the method prescribed by us, so please bring the warranty card with the prod uct to where you purchased it.
2, In the following cases repairs will be charged even within the warranty period.
(1) If you cannot show the warranty card
(2) If you cannot fill in the specified items, or if the words are rewritten.
(3) When the cause of the failure is careless handling.
(4) When the cause of the failure is an impact during transportation or movement by the customer.
(5) In the case of natural disaster, failure or damage due to pollution, abnormal voltage or other external factors.
(6) When purchased by transfer, second-hand sales, auction, resale, etc.
3, If it is determined that the customer has made any modifications or repairs, we will not be able to accept repairs within the warranty period.
4, We shall not be liable for any direct or indirect damage caused by the failure of this product or its use.
5, We cannot compensate for the loss or damage of data or programs that occur while using this product.
6) This product is incorporated and used in medical equipment, nuclear equipment, aerospace equipment, transportation equipment, and other life-threatening equipment, as well as equipment and systems that require a high degree of reliability. Is not intended. We are not responsible for any personal injury or social injury caused by using this product for these purposes.
7) Customers are responsible for all costs associated with mailing or bringing the repair request.
8) The warranty card will not be re-issued, so please keep it in a safe place.

Meaning of icon

⚠ **Warning**	Details of harm that may cause death or serious injury to the person
⚠ **Attention**	Contents that may cause injury or property damage to people! Contents that you should be careful about
! Please pay attention to the content	

Precautions for safe use (be sure to observe)

⚠ Warning

● This product is incorporated and used in medical equipment, nuclear equipment, aerospace equipment, transportation equipment, and other life-threatening equipment, as well as equipment and systems that require a high degree of reliability. Is not intended. We are not responsible for any personal injury or social injury caused by using this product for these purposes.
● Do not touch the product or cables while thundering.
▲ There is a risk of electric shock due to a lightning strike.
● Since this product is powered by electricity, there is a risk of ignition. If smoke or a strange odor is emitted, turn off the power of this product and the connected PC or device, and contact the store where you purchased the product or us.
▲ It may cause a fire depending on the environment in which this product is installed.
● Do not step on the cable of this product with furniture or pinch it with a door. Also, do not pull or bend the cable.
▲ It may cause a fire or malfunction.

⚠ Attention

● Please be careful not to put this product to children's mouth.
▲ It may cause injury to children or malfunction of this product.
● Do not open or disassemble the cover of this product.
▲ It may cause a malfunction or electric shock.
● Do not touch the product or cable with wet hands.
▲ There is a risk of electric shock when this product is connecting to a computer.
● Do not allow foreign substances such as liquids and metals to get inside the product.
▲ It may cause electric shock, fire or malfunction.
● Do not install or store this product in a place with high humidity or humidity, in direct sunlight, in a place with a lot of dust or oily smoke, in a car or near a heater, or in a hot place.
▲ It may cause a malfunction or electric shock.
● Avoid this product to strong vibration or impact.
▲It may cause malfunction or damage.
● Do not stack this product on top of each other or place heavy objects on top of this product.
▲It may cause a fire or malfunction.
● Do not install or store this product in an unstable place.
▲Dropping may cause malfunction or damage.
● When connecting or disconnecting the cable of this product, be sure to hold the connector part and do not apply excessive force.
▲It may cause malfunction or damage.
● Before cleaning this product, disconnect the cable of this product from your Power source.
▲It may cause electric shock or malfunction.
● When cleaning this product, do not use it that contains volatile organic solvents such as benzine and thinner.
▲It may damage the paint or cause a malfunction. Wipe dry with a soft, dry cloth.
(1) It is prohibited to copy or reprint a part or all of this manual without permission.
(2) The Company shall not be liable for any direct or indirect damage caused by the failure of this product or its use. Please note.
(3) We do not guarantee the loss or damage of data or programs that occur while using this product. Please note that. Take measures such as taking regular backups.
(4) This product is made for only in our self country. We are not responsible for any use outside of our country.
(5) The images on the screen described in this manual may differ from the actual ones.
(6) If you find any suspicious points, mistakes, omissions, etc. regarding the contents of this manual, please contact the store where you purchased the product or us.

1. Features

- It is a 2.4GHz wireless Webcam that does not require a cable connection.
- It can be used even at a distance of about 20m in a straight line.
- The range of use varies greatly depending on the environment.
- It has a built-in lithium-ion battery and can be used continuously for about 3 hours on a single charge.
- It can be used while charging with a small charging cable, so there is no need to worry about running out of battery.
- It supports USB video class (UVC), so no driver is required. All you have to do is connect the receiver to your computer and it will work.
- Built-in tripod hole for camera. It can be attached to a commercially available camera tripod.
- Video works smoothly with USB 2.0 support.
- It supports various video chats such as Zoom, Microsoft Teams, and Skype.

!
- If you use a router or firewall to connect to the Internet, you may not be able to use Internet-based functions such as video chat.
- We only supply the Webcam itself. We do not supply any video conference software such as Zoom, Microsoft Teams, or Skype.

2. Product Specification

Imaging Sensor	1/2.9 inch CMOS Sensor
Total Pixels	2.0 million pixels
Output Image Format	MJPG，H264，YUY2
Focal Length	f=3.9±5% mm
Minimum Illumination	0.5Lux
Focus Mode	Fixed Focus
Image Color	24Bit
Aperture Pattern	Fixed
Picture Adjustment	None
Field of View	Diagonal:81.3°，Horizontal：68.9º
Resolution	1920*1080@30fps,1280*720@30fps
Video Interface	USB2.0
Mic quantity	1
MIC ArrayForm	Electret microphone
SNR	58dB
Sensitivity	-42dB
Far-field Distance	0-3 meters
Horizontal Voice pickup	Horizontal 180°
Input Voltage	USB 5V
Working Current	450mA-800mA
Storage Temperature and	-10℃~+60℃/20%-95% Humidity
Working Temperature and	-10℃~+50℃/20%-80% Humidity
Operating Enviroment	Indoor
OS	Win / Vista / Linux / MAC / Android
Size	75 x 62 x 79 mm
Weight	100g

■ Supported OS

Windows 11/10/8.1/8
Mac OS 12/11
Mac OS 10.12~10.15

■ System requirements

The following conditions are required for using this device.

- Intels@CoreTM i3 1.2GHz or above 2GB or above
- Memory 2GB or above
- 3.Hard disk 2GB or above
- 4.One free space USB port

3. Names and functions of each part

(1). Wireless Webcam

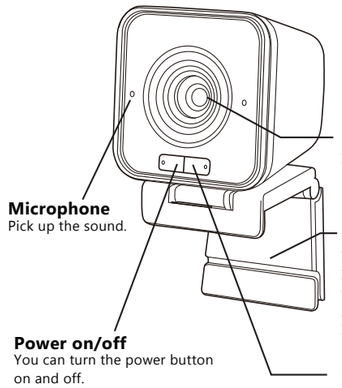

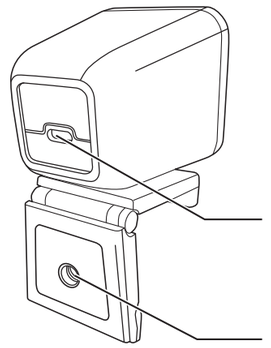

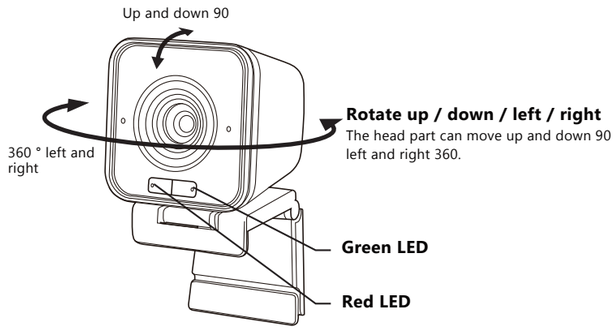

(2). USB Receiver

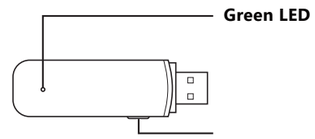

Wireless Webcam

	Camera(TX modules)		USB Unit(RX Modules)
	Red LED	Green LED	Green LED
Lighting	Charging	Connected	Connected
Slowly flash	Low battery	Disconnected	Disconnected
Fastly flash	—	Pairing	Pairing

Below is the contents of how to use the device

4. How to use

1 Charge

- When using for the first time, charge until the red LED turns off.
- Be sure to charge with the included USB cable for charging.

❶ Connect the charging USB cable to the charging port of the Webcam as shown on the right.

❷ Connect the USB cable for charging (A connector) to your computer or AC charger-adapter. LED light turns ON during chargering.

❸ Charging time is about 3 hours. When the battery is full charged , the red LED light turns OFF

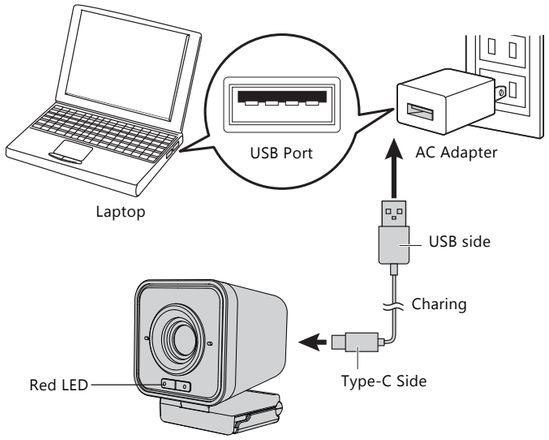

2 2 Install the camera

2 Install the camera

❶ Place this product on the monitor of laptop/PC

❷ Adjust the mount as per the thickness of a laptop/PC/Screen

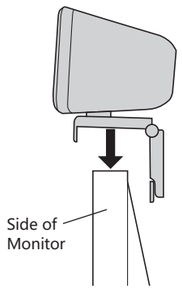

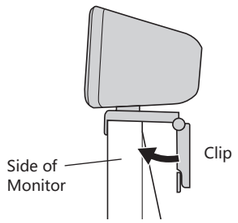

※ When installing on a laptop,please take care not to damage the monitor

How to install on a tripod * Tripod is not included

Attach the camera screw of the tripod to the tripod hole on the back of the stand.

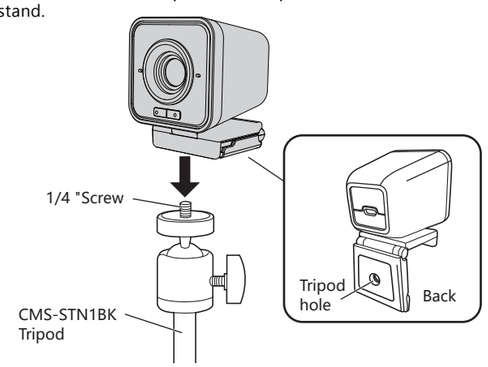

3 Connect the camera

Before installation

This product is a high power device.
Do not connect to USB hub without AC adpater
※ It does not work properly.
Connect it directly to your computer or to a USB hub with an AC adapter.

With the camera turned on, press and hold the power button, the power of camera will be turned off.

Connect the USB connector of the receiver to the USB port of your computer.
The driver will be installed automatically.
The installation status is displayed in the task tray during installation.

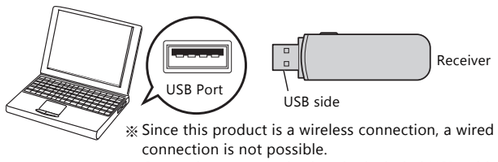

※ Since this product is a wireless connection, a wired connection is not possible.
Cannot be connected using the included USB cable

4 Turn on the camera

❶ After connecting the receiver to your computer, press the power button on the camera body.

❷ The green LED on the camera body and the green LED on the receiver will light up.
The camera is now ready for use.

❸ With the camera turned on Press and hold the power button The power of the camera will be turned off.

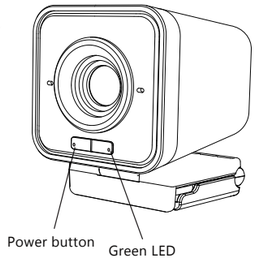

- If the green LED on the camera body and the green LED on the receiver are blinking, the receiver may not be connected properly or may not be paired.
  Make sure the receiver is connected to your computer.
- Pairing is completed at the time of shipment from the factory. If the pairing of the camera is broken, please reconnect from "6. How to reconnect ".

<Camera automatic power off function>
If you turn off your computer while the camera is on, the camera will automatically turn off.
If the charging cable is connected to the camera and power is supplied, the camera will not turn off.

5. How to check if this product is recognized correctly

For Windows 11

1. From Windows start
   Select all apps

2. Click Camera

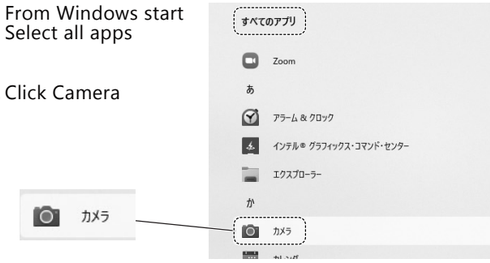

For Windows 10

1. Click Windows Start and click "Camera"The image of the WEB camera is projected.

2. When multiple cameras are connected and the image of this product is not displayed Click "Switch Camera" to change the camera.

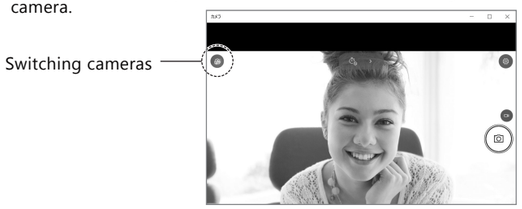

Switching cameras For Windows 8.1-8

1. Click Windows Start to display the Start screen.

2-1.The screen on the right is displayed Click the camera icon. If the icon is not displayed, click the arrow icon to display the list of apps.

2-2. Click the camera icon from the app list

3. The image of the WEB camera is projected.
If multiple cameras are connected and the image of this product is not displayed, Right-click the screen to display the setting screen.
Click "Switch Camera" to change the camera.

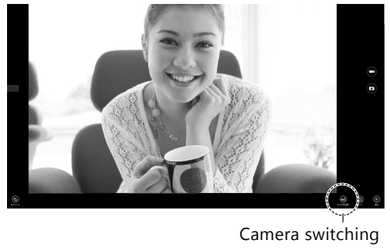

For Mac

1. Start 1.0S and in the application folder Launch Face Time!

2. From "Video", "choose the webcam model of this product

3. The image taken with this product is displayed on the preview screen.

6. How to reconnect

The pairing was completed at the factory, but if the camera is out of pairing, you can reconnect it.

1. turn on the power of the camera
The green LED on the camera body flashes slowly. (If it is lit, which means it is already paired)
2. Press the pairing button on the camera body. The green LED flashes quickly.
3. Connect the receiver to your computer. Make sure the green LED on the receiver is blinking and press the pairing button on the receiver
4. Green LED on the camera body and receiver Green LED lights up

This completes the pairing.

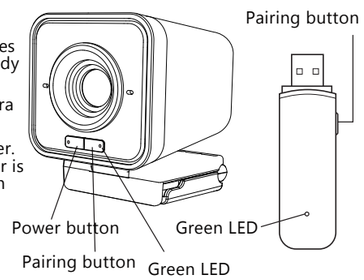

7. FAQ

Q1: Is it compatible with Zoom, Microsoft Teams and Skype?
A1: Compatible.

Q2: I want to use it for video conferences at my company.
A2: Many companies use firewalls when connecting to the Internet, so they may not be available for video conferences. Please contact the server administrator for details.

Q3: The image does not move smoothly, it does not move smoothly.
A3: It depends on the performance of your computer and the speed of your internet connection.

Q4: I want to test whether the camera is working.
A4: Please refer to "5. How to check if this product is recognized correctly".

This device complies with part 15 of the FCC Rules. Operation is subject to the following two conditions: (1) This device may not cause harmful interference, and (2) this device must accept any interference received, including interference that may cause undesired operation.

Any Changes or modifications not expressly approved by the party responsible for compliance could void the user's authority to operate the equipment.

Note: This equipment has been tested and found to comply with the limits for a Class B digital device, pursuant to part 15 of the FCC Rules. These limits are designed to provide reasonable protection against harmful interference in a residential installation. This equipment generates uses and can radiate radio frequency energy and, if not installed and used in accordance with the instructions, may cause harmful interference to radio communications. However, there is no guarantee that interference will not occur in a particular installation. If this equipment does cause harmful interference to radio or television reception, which can be determined by turning the equipment off and on, the user is encouraged to try to correct the interference by one or more of the following measures:
-Reorient or relocate the receiving antenna.
-Increase the separation between the equipment and receiver.
-Connect the equipment into an outlet on a circuit different from that to which the receiver is connected.
-Consult the dealer or an experienced radio/TV technician for help.

This equipment complies with FCC radiation exposure limits set forth for an uncontrolled environment. This equipment should be installed and operated with minimum distance 20cm between the radiator & your body.