DOG TRAINING COLLAR

Model
ES-TC01

User Manual

Product Specification

Model	ES-TC01
Receiver's Casing	IPX7 waterproof
Remote's Casing	IPX4 waterproof
Remote/ Receiver's Battery	300mAh
Remote/Receiver Charging Time	Full Charger 2hr
Remote/Receiver Standby Time	Remote 45 days Receiver 25 days
Remote to Receiver's Signal Range Distance	2000-3000FT
Maximum Supported Quantity	4 receivers

Main Features:

3-Mode Safety Lock Switch: Prevents accidental operations caused by inadvertent touches.

Flashlight Function: Equipped with a flashlight, making it convenient for use during nighttime or in dark areas.

3 Training Modes: Vibration, sound, and electric shock, allowing you to choose the appropriate training method based on your needs.

Adjustable Vibration/Sound Intensity: Provides 6 levels (L1-L6) of vibration and sound intensity adjustment.

Adjustable Electric Shock Intensity: Offers 99 levels (00-99) of electric shock intensity adjustment.

IPX7 Waterproof Receiver: Ensures it can be used in moist environments without damage, and IPX4 Waterproof Remote.

2000-3000FT Remote Range: Enables remote training, providing greater flexibility.

2 Hour Fast-Charging Lithium Polymer Battery: Rapid charging to extend usage time.

Large Digital Display Screen: Shows vibration/sound intensity levels, battery status.

Support 4 Receiver Collars with One Remote: Suitable for multi-pet households.

Magnetic Charging Port/Type-C Charging Port: Convenient charging methods.

Components

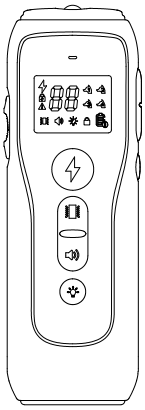

❶ Remote Transmitter

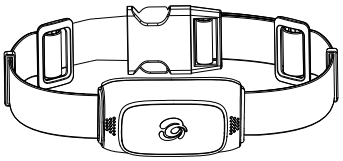

❷ Receiver Collar

❸ Magnetic Charging Cable

❹ Type-C Charging Cable

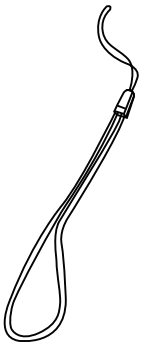

❺ Wrist Strap

❻ User Manual

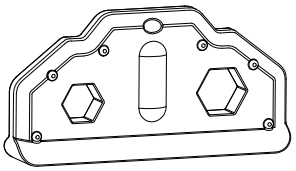

❼ Test Light Tool

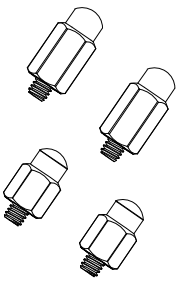

❽ Contact Points

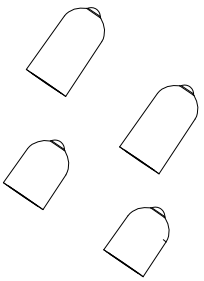

❾ Conductive Silicone Caps

Important Safety Information

⚠ CAUTION

❶ Set appropriate intensity: Always start with the lowest intensity and gradually increase it, ensuring that it does not cause excessive fright or pain to the dog.
❷ Avoid over-punishment: Over-punishment can lead to negative emotions and may even make the dog fearful of the dog training collar.
❸ Respect the dog: Respect the dog's feelings and needs.Understand the dog's body language and behavior, ensuring that they remain comfortable and happy during the training process.

⚠ CAUTION

- Please read the user manual carefully before use to avoid any harm caused by improper use. Proper installation of the collar is crucial. Prolonged or overly tight wearing of the collar on the pet's neck may lead to skin damage, ranging from redness and swelling to pressure sores, commonly known as bedsores.

❶ Avoid having your pet wear the receiver for more than 12 hours each day.
❷ Re-adjust the position of the receiver on the pet's neck every 1-2 hours if possible, and check for tightness.Never attach the leash to the electronic collar, as it may exert excessive pressure on the contact points.
❸ Use a separate collar for leash walking your pet, and do not put pressure on the electronic collar.
❹ Clean the dog's neck and the collar's contact points with a damp cloth weekly to keep them clean.
❺ Check the contact area daily for any signs of rash or discomfort. If you notice any rashes or pain, immediately stop using the collar until the skin heals.
❻ Do not use an adapter with an output greater than 5V1A for charging.
❼ Avoid contact with other metals while charging to prevent short circuits.

⚠ WARNING

Not suitable for aggressive dogs. If your dog is aggressive or prone to aggressive behavior, do not use this product. Aggressive dogs may cause serious harm or even death to their owners and others. If any doubts, please consult a veterinarian or a certified trainer.

Product Description

Remote Transmitter

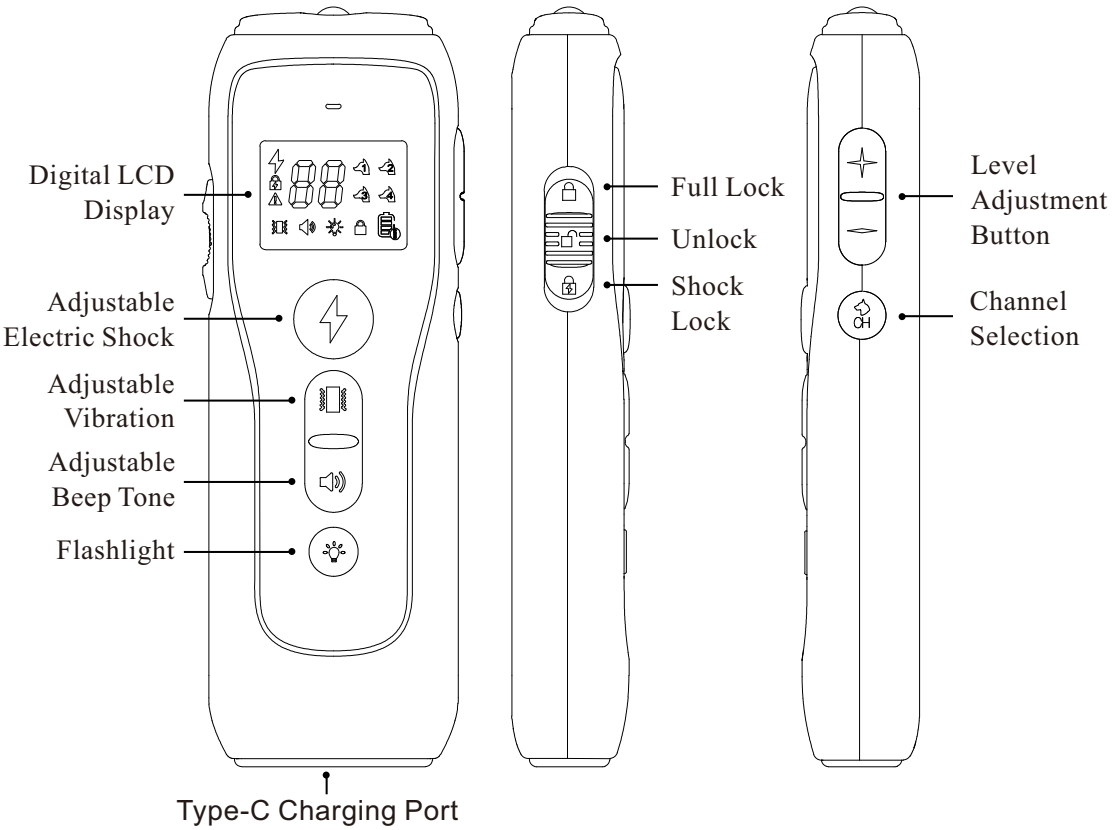

Screen Content

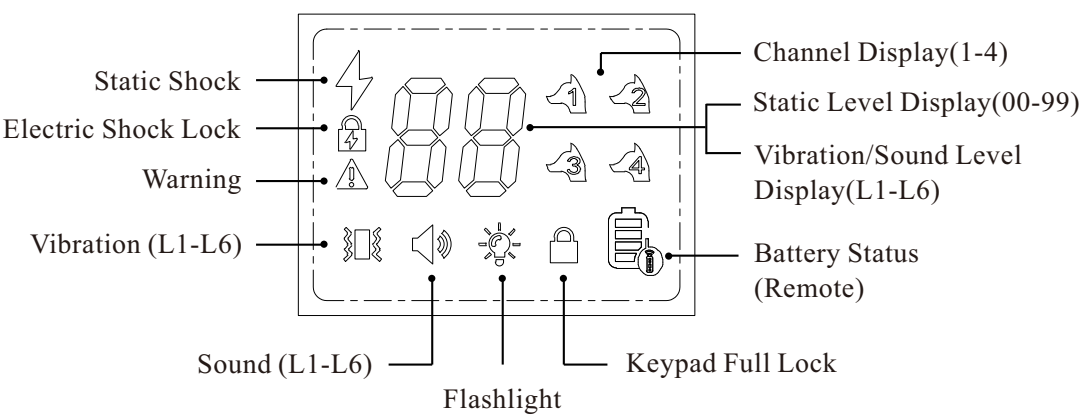

Product Description

Receiver Collar

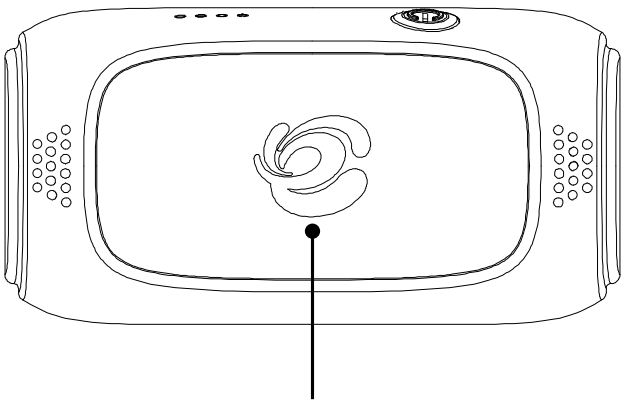

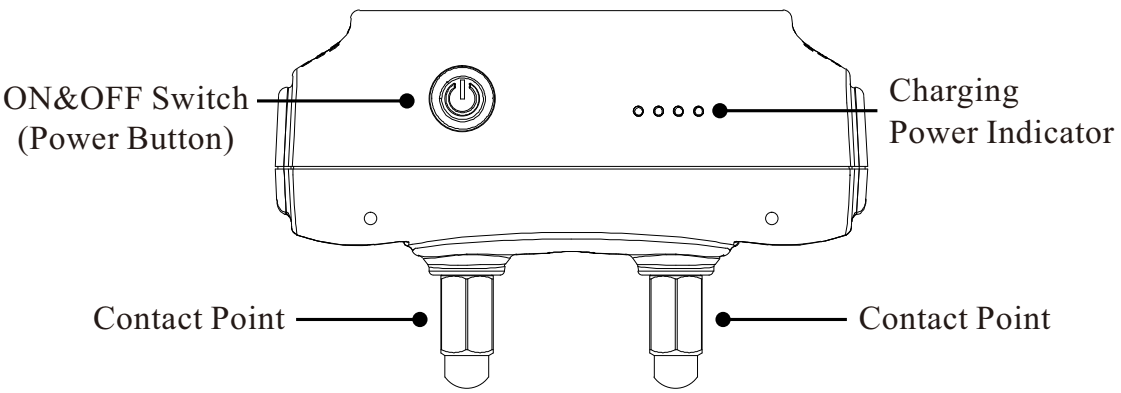

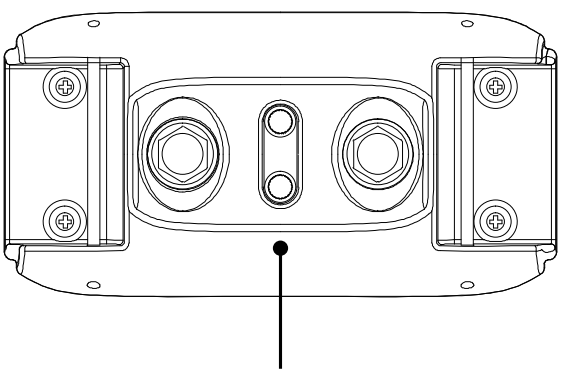

Introduction to The Power on/off Buttons of The Receiver:

- Power On: Press and hold the power button for 1 second. The battery charging power indicator and LED status Light will illuminate.
- Power Off: Press and hold the power button for 1 second.
  The product will vibrate with decreasing intensity, and the battery indicator light will immediately light up and then turn off.
- Pairing Mode: When the receiver is powered off, press and hold the power button continuously for about 4 seconds (do not release it midway). The receiver will emit a soft sound, and the logo indicator light will start flashing. This indicates that the receiver has entered pairing mode.（**NOTE**: After the pairing time lasts for 15 seconds, the pairing mechanism will automatically close.)

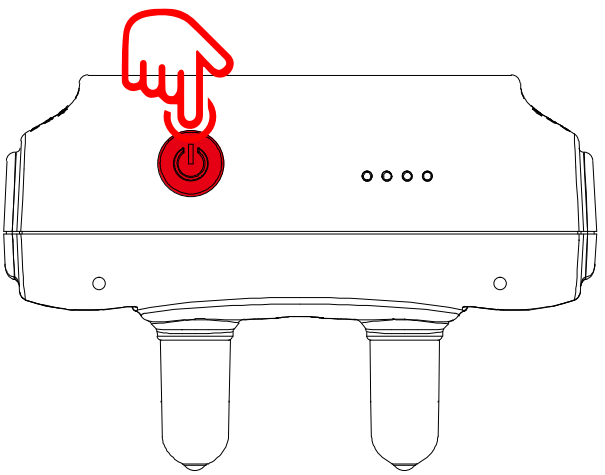

Introduction to The Security Keypad of The Transmitter:

- **Full Lock:** All functions are locked except flashlight function.
- **Unlock:** Functions normal.
- **Electric Shock Lock:**
  Only electric shock function is locked.

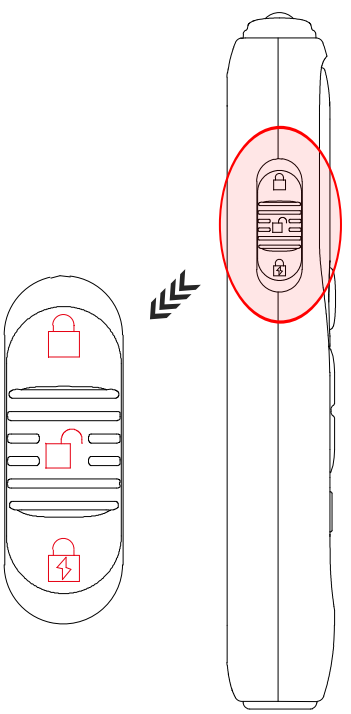

Pairing Instructions:

（**Note**: You can skip this step as the devices are already paired at the factory.）

How to Pair The Remote with The Receiver:

1、Ensure the receiver is turned off.

2、Press and hold the receiver's power button for 4 seconds until the logo indicator shows a rapid green flashing light.

3、Press any function button on the remote to pair it with the receiver.

4、Successful Pairing: The receiver will emit a slightly longer "beep" sound.

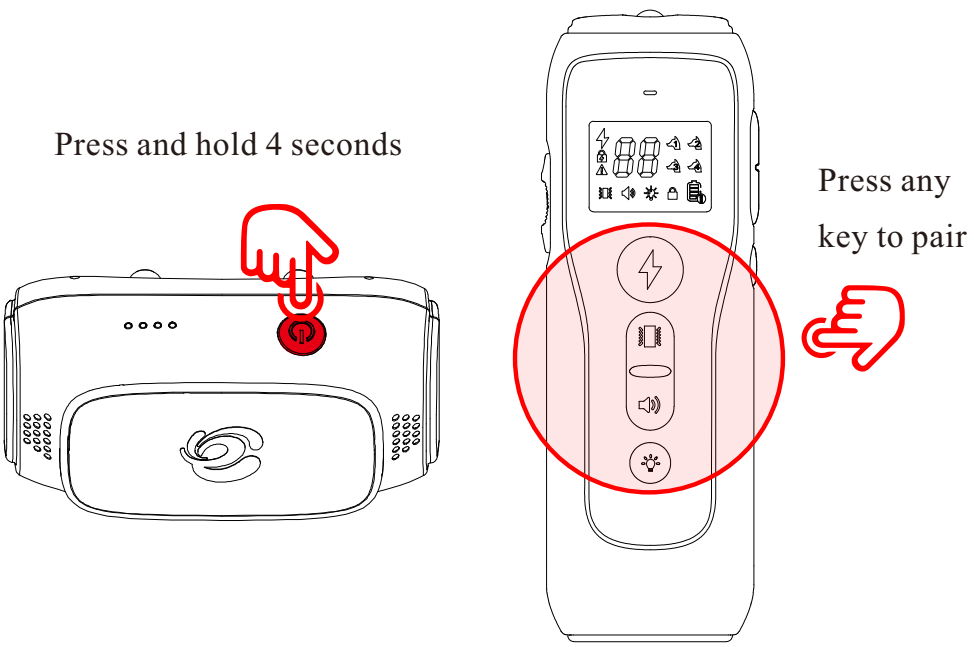

(**Note**: If you are only using one receiver, you can skip this step. The following setup is for controlling multiple receivers with one remote.)

Part: Pairing a 2nd, 3rd or 4th Receiver

1、Ensure the receiver is turned off.

2、Press and hold the receiver's power button for 4 seconds until the logo indicator shows a rapid green flashing light.

3、Press the channel selection key to choose your desired channel number.

4、Press any function button on the remote to pair it with the receiver.

5、Successful Pairing: The receiver will emit a slightly longer "beep" sound.

The Voice Commands:
(How to Adjust The Volume Level?)

Long-press the sound button (do not release it midway), and then adjust the volume level (L1 to L6) by simultaneously using the side "+" and "-" buttons.

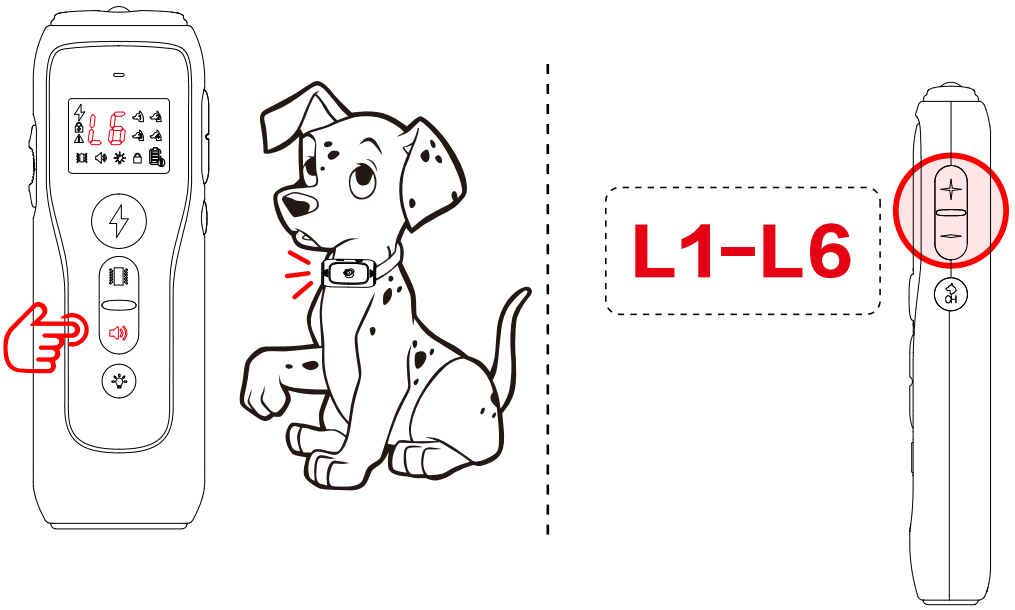

The Vibration Commands:
(How to Adjust The Vibration Level?)

Long-press the vibration button (do not release it midway), and then adjust the vibration level (L1 to L6) by simultaneously using the side "+" and "-" buttons.

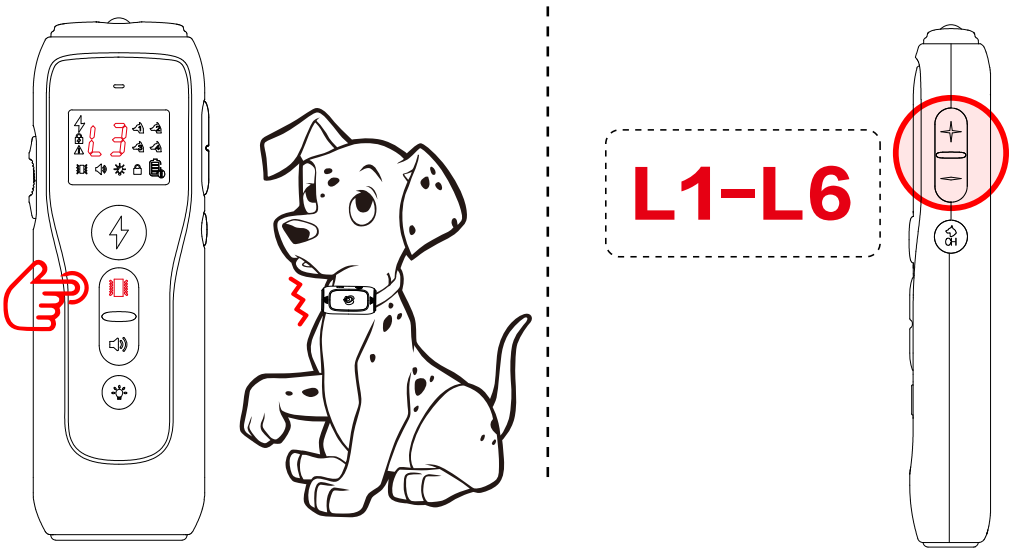

The Electric Shock Commands:
(How to Adjust The Static Level?)

Simply adjust it by using the side "+" and "-" buttons (from 00 to 99).

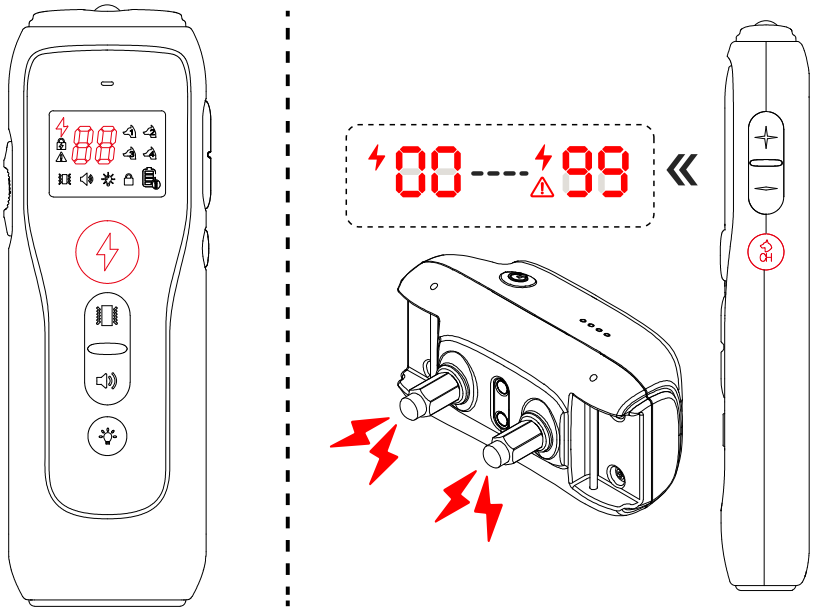

Channel Selection:

lt is possible to train 4 dogs at the same time, or switch the paired channel to control a specific dog separately.

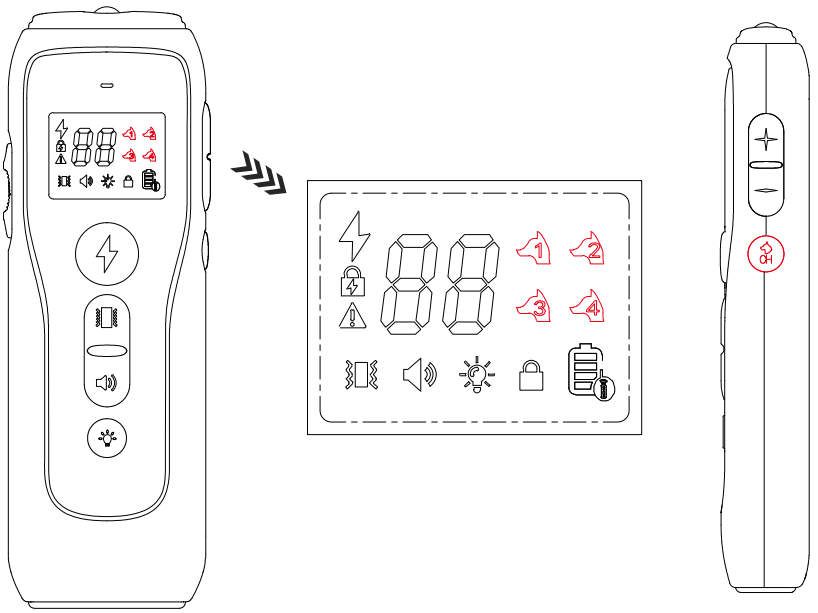

Operating Guide

1 Charging Instructions (Approximately 2 Hours Charging Time):

When charging is complete, the green indicator light will turn on.

Both the remote control and the receiver will take about 2 hours to fully charge.

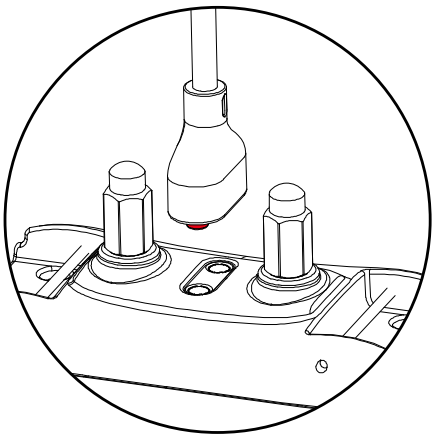

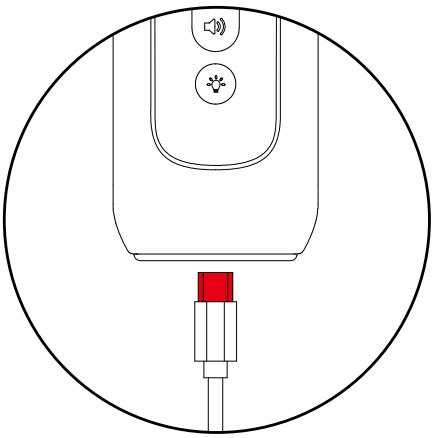

2 Wearing Instructions:

Note: The contact point of the collar on the dog's neck must directly touch the skin on the underside of the dog's neck. You can check the tightness of the collar by inserting one finger snugly between the collar and the neck.

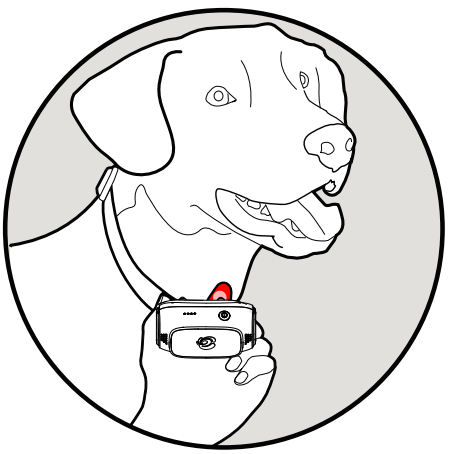

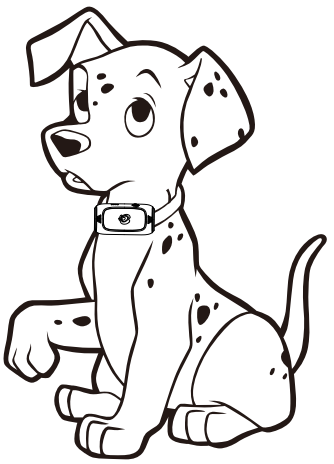

Training Tips:

❶ Reward your dog with food or treats to achieve the best training results.

❷ Avoid using the device on dogs below 6 months old, pregnant dogs, easily frightened dogs, aggressive dogs, dogs in heat, or dogs in poor health conditions.

❸ Begin with verbal commands and only use corrective stimuli when necessary. Be consistent with your verbal commands, using the same words every time. Work on one behavior at a time to avoid confusion and frustration.

❹ Use the minimum amount of stimulus required and only use it to reinforce verbal commands when needed. Avoid over-correcting your dog.

❺ For example, use the beep sound as a warning by pressing the beep button. Your dog will become conditioned to the beep preceding the corrective stimulus and will soon learn to recognize the beep as a warning along with your verbal command.

❻ Don't rely solely on this product to train your dog. Some dogs may not respond to this product, and we cannot guarantee its effectiveness on every dog. If your dog shows signs of growling, biting, or aggression while using the collar, discontinue use immediately and seek advice from a professional trainer.

❼ It is recommended to train one dog at a time in a distraction-free environment to increase efficiency and avoid temptation or distraction from other dogs.

Troubleshooting

❶ Remote/ Receiver Does Not Response.

1、Verify if the Receiver Collar is on.

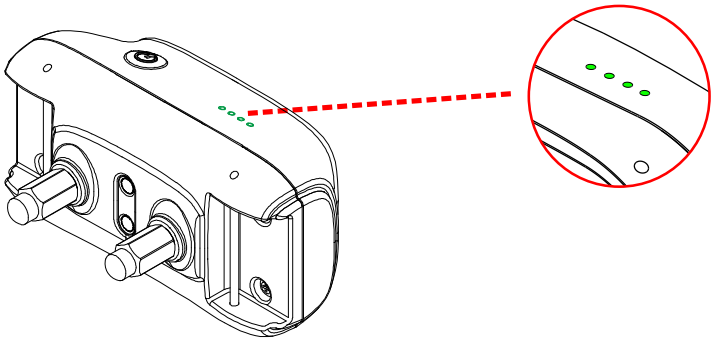

2、Verify if the battery of the Transmitter is fully charged.

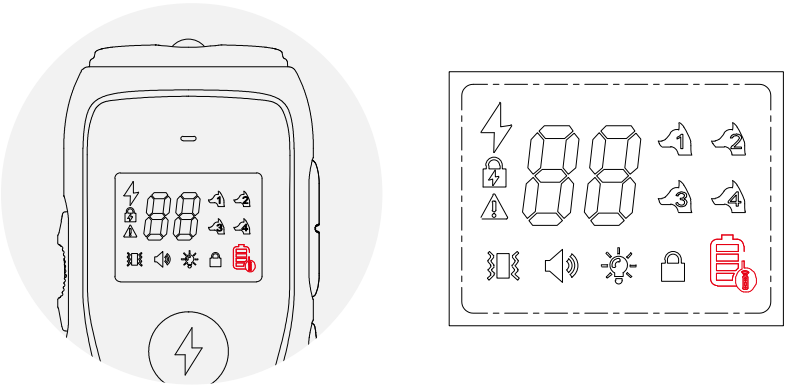

3、Verify if the Receiver Collar has been paired.

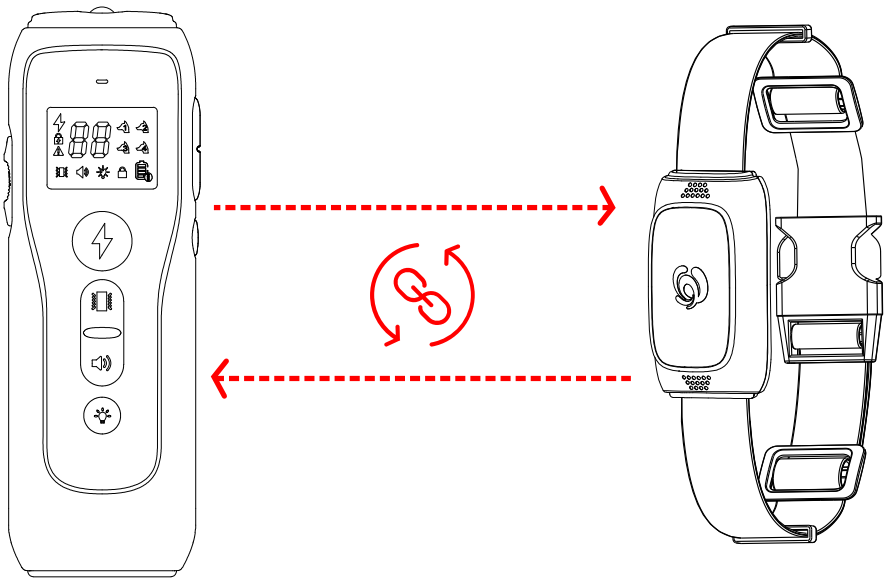

❷ Fail to Match Receiver with Remote.

• Ensure the receiver is connected to a power source (charging mode can only be activated while charging).Must Press and hold the receiver's power button for 4 seconds, if not, matching will fail. lf the problem persists after attempting as above, please contact us to confirm whether the receiver and the remote are of the same version.

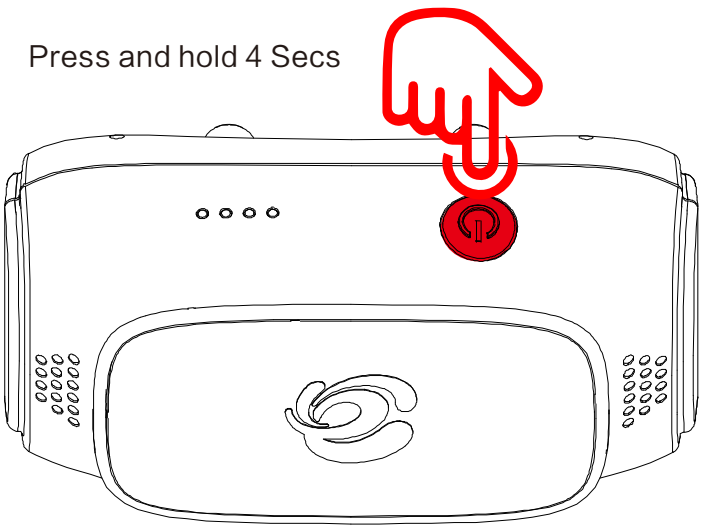

❸ My Pet is Not Responding When I Press a Beep/Vibration or Electric Shock Button.

1、Check the Receiver Collar if it is On.

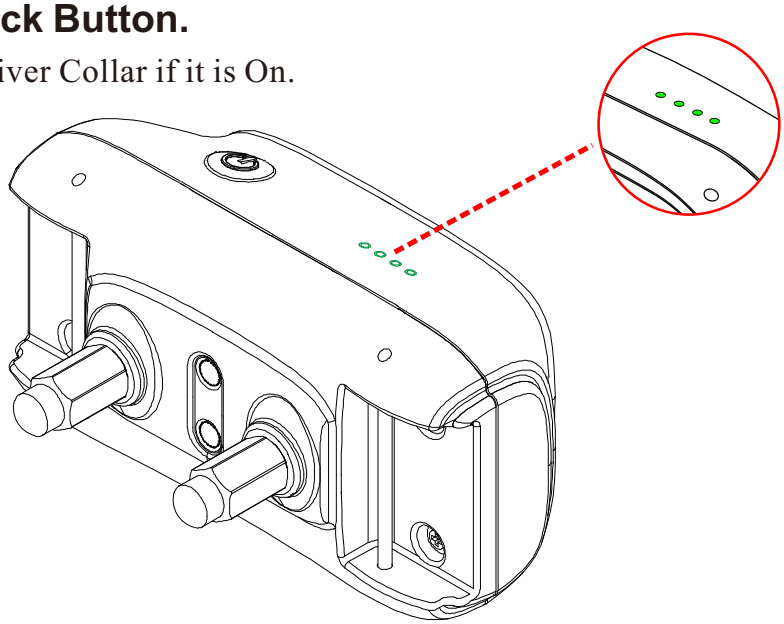

2、Please check if the battery is low in either the Remote Transmitter or Receiver Collar.

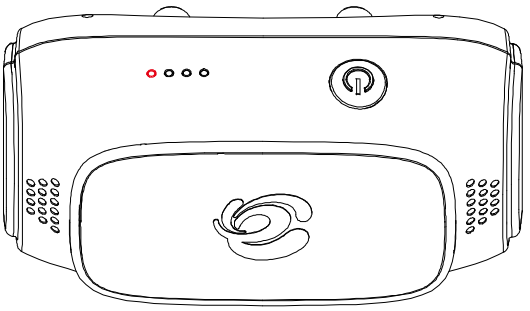

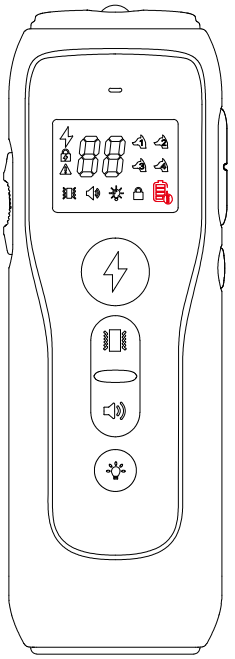

3、Test the Receiver with the Test Light to confirm if shock functions normally.

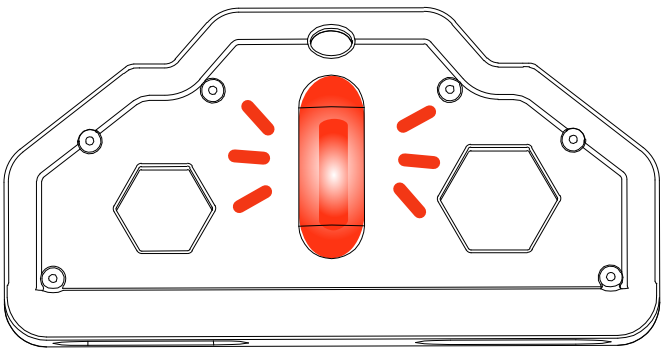

4、Increase the correction level. Refer to “Find the Best Stimulation Level For Your dog”.

5、Make sure the Receiver Collar's Contact Points are placed snugly against your pet's skin.

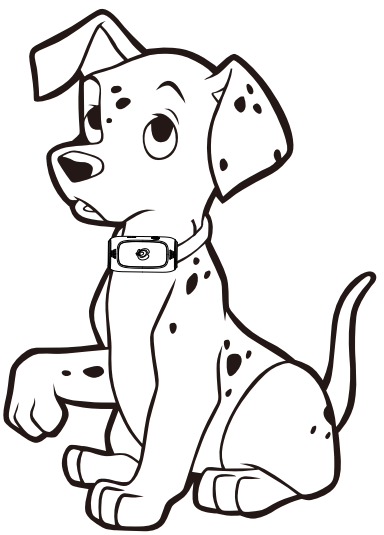

Use of The Test Light Tool

A : Electric Shock Test

1. Make sure the Remote and Receiver Collar on.
2. Hold the Test Light tool contacts to the Contact Points.
3. Press a Static button on the Remote Transmitter.
   The Test Light will be lighted.

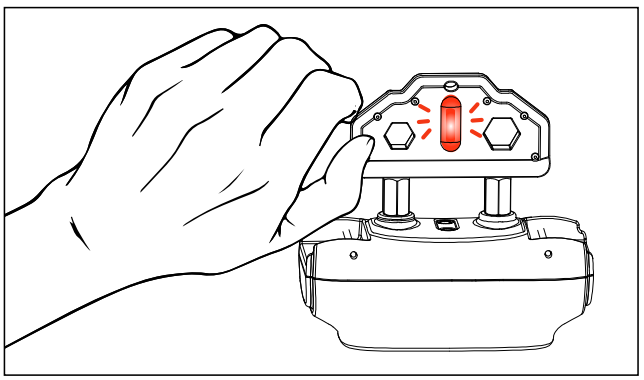

B: As a Tool to Tighten or Loosen The Contact Points

- For dog with shorter coats, use 2pcs shorter contact points.
- For dog with thicker coats, use 2pcs longer contact points.
- Install the conductive Silicone onto the contact point to make it softer.
  lt may better to your dog's skin.

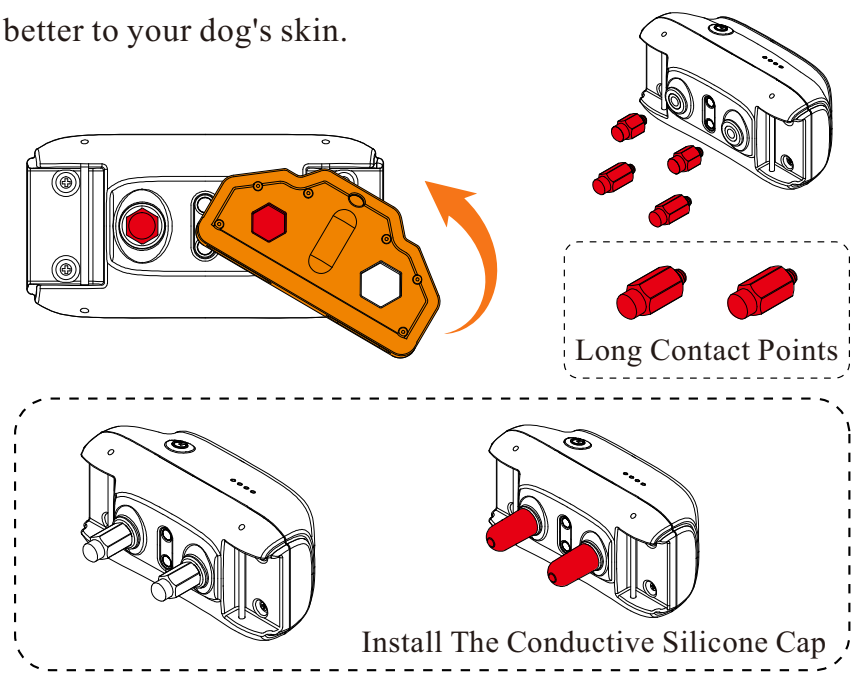

Question & Answer

Q: How to Change The Longer Prongs for This Collar? Don't Think They Are Getting Through My Labs Thick Hair.

A: Just part the hair or trim it a bit. I have a dog with very thick neck of hair. I parted it with my hands. Just be sure remote is off then start on low setting and work your way up. lf no response repeat steps of working prongs thru hair remember to turn off or lock remote.

Q: Is The Vibration/ Shock Safe for My Pet?

A: While the Vibration/Shock is unpleasant, it is harmless to your pet. Electronic training devices require interaction and training from the owner to achieve desired results.

Q: Can I Pair Two Collars to One Remote At The Same Time?

A: 1. Ensure the two Receivers are turned off.

Press and hold the two Receivers' Power Buttons for 4 seconds until the Logo Indicator Light shows a rapid green flashing light.

2. Press the Channel Selection key to choose the same channel number.

3. Press any function button on the Remote to pair it with the two Receivers.

4. Successful Pairing: The two Receivers will emit a slightly longer "beep" sound.

Q: Can I Train 3 Dogs Together?

A: Yes, it can support 4 Receiver Collars with one Remote, very suitable for multi-pet households.

Steps for Replacing The Collar Receiver's Strap:

If the strap of the receiver is damaged, it can be replaced.

The Steps:

1. Use scissors or other tools to cut off the old strap.

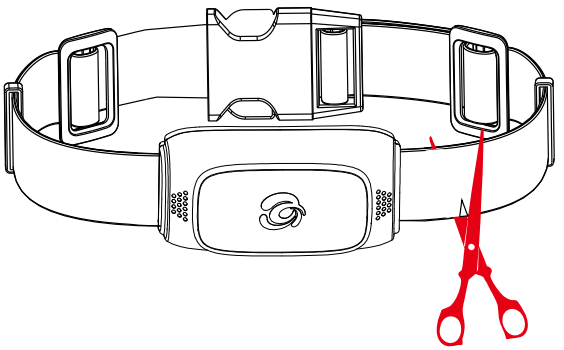

2. Install the new strap and nuts on the receiver, and tighten the bolts by hand first.

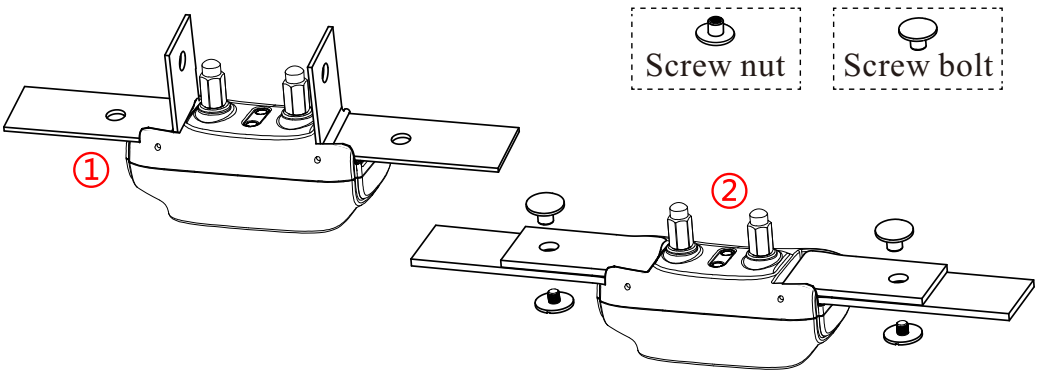

3. Finally, use a hammer to secure the nuts, ensuring that the rivets will not come off.

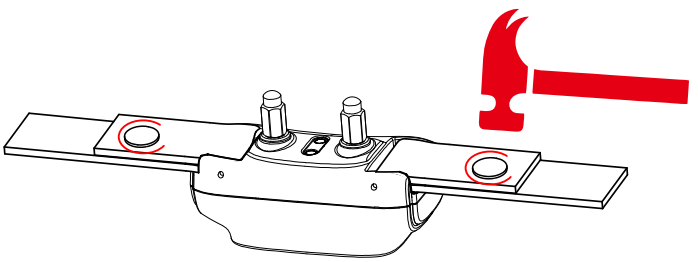

Operating Environment & Maintenance

Please Do Not Use The Product In The Following Circumstances:

1. Do not operate the devices in temperatures of 104°F and above. Using them in such high temperatures can decrease the performance of the batteries.
2. Avoid using the devices in places with strong electromagnetic interference, as it will greatly compromise the product's performance.
3. Avoid dropping the devices on hard surfaces or inflicting excessive force on them.
4. Refrain from using the devices in environments flooded with corrosive chemicals, as this may lead to color degradation, deformation, or cracking of the exterior.

Maintenance:

1. When not in use, please clean both the Remote and Receiver with a mild detergent. Turn off the Remote, lock the keypad, and put the rubber lid on the Receiver's charging port. Store them in a cool, dry place.
2. During cleaning, use a soft cloth and mild detergent. Do not use hard brushes that may scratch the surface of the device.
3. If the Receiver gets dirty, wipe it clean with a damp cloth. Please do not submerge the Receiver in water for an extended period, even though it is waterproof.

Note: Do not submerge the Receiver into water for long period of time, even though it is waterproof.

4. If you find residues around the charging port's rubber lid, clean them to prevent water from seeping in.
5. If the Remote falls into water, quickly pick it up and turn off the power. Dry it with a cloth as much as possible and let it dry out. It should function normally once the moisture is dried out.

Warranty And Repair Information：

1-YEAR WARRANTY:

• The original purchaser of this unit is provided with a 1-YEAR WARRANTY.

• The warranty begins from the date of purchase and covers both Parts and Labor for warranty repair services during the first year. However, the cost of return postage is the responsibility of the buyer.

• Accessories such as chargers, straps, and batteries are covered for the first year only. After the warranty expires, customers will need to cover the cost of parts and repairs themselves.

Products That Won't Qualify for The 1-YEAR WARRANTY:

❶ Products that have been bought secondhand or as a resold product are not covered by the warranty.

❷ Manual damage or loss is not covered by the warranty.

❸ Any water damage to the Water-Resistant Transmitters and Water-Resistant Receivers of our product series will not be covered.

❹ The warranty is void if the unit has been altered or if an unauthorized person attempts to repair the unit, resulting in damage.

❺ During the warranty period, replacing batteries is not recommended. If the customer chooses to replace the batteries, any damage to the unit during the change-out by the owner will void the warranty.

To Activate The Warranty:

If there is a problem with your product, please send the following information to **eszz.ltd@outlook.com** for after-sale service:

1. Your original order page.
2. Your current shipping address.
3. After confirming the provided information, we will send you the replacement within 5 business days.

Terms of Use & Limitation of Liability

❶ This product is a professional dog training device. It is not recommended for use on clever dogs weighing less than 15 lbs. If you are uncertain whether the product is suitable for your pet dog, please consult a professional handler or contact us.

❷ This product is intended solely for professional dog training purposes and should not be used for other applications. Please ensure compliance with local laws when using this product.

❸ We assume no liability for any direct or indirect losses caused by the use or misuse of this product. All risks associated with using this product shall be borne by the user.

❹ For parts warranty, goods return, or exchange, please contact the dealer. We provide technical support only.

❺ We reserve the right to modify the terms, conditions, and notices related to this product offering.

❻ By using this product, you agree to all the terms and conditions.

Reference Weight for Dogs:

- Large Dog (Body height above 24 inches, Weight above 88 lbs)
- Medium Dog (Height 16-24 inches, Weight 24.2-66 lbs)
- Small Dog (Height 10-16 inches, Weight 8.8-22 lbs)
- Mini Dog (Height under 10 inches, Weight under 8.8 lbs)

FCC Statement

This Device Complies with Part 15 of The Fcc Rules. Operation Is Subject to The Following Two Conditions:

（1) This device may not cause harmful interference.

(2) This device must accept any interference received, including interference that may cause undesired operation.

Warning: Changes or modifications not expressly approved by the party responsible for compliance could void the user's authority to operate the equipment.

NOTE:

This equipment has been tested and found to comply with the limits for a Class B digital device, pursuant to part 15 of the FCC Rules. These limits are designed to provide reasonable protection against harmful interference in a residential installation. This equipment generates, uses, and can radiate radio frequency energy, and if not installed and used in accordance with the instructions, may cause harmful interference to radio communications. However, there is no guarantee that interference will not occur in a specific installation. If interference does occur to radio or television reception, which can be determined by turning the equipment off and on, the user is encouraged to try to correct the interference by one or more of the following measures:

- Increase the separation between the equipment and the receiver.
- Connect the equipment to an outlet on a circuit different from that to which the receiver is connected.
- Consult customer care, the dealer, or an experienced radio/TV technician for help.

Regarding You And The Product:

1. It is strictly prohibited to open the receiver in any situation. Doing so will likely compromise the waterproof function and thus void the product warranty.
2. Please use the remote control and the receiver from the complete set. Do not use other products to pair with the receiver.
3. If you want to test the product, please use professional testing apparatus. Do not test with your hands to avoid accidental injury.
4. If you find water at the charging port, please wipe it dry before charging.
5. Beware of environmental interference, as it can cause the product to not work properly. For example, avoid using the product near high voltage facilities, communication towers, during thunderstorms, near large buildings, and in areas with strong electromagnetic interference.
6. The included collar is a basic accessory and may not be suitable for all types of dog breeds. Any collar that is not wider than 20mm and not thicker than 2mm, made of soft material, can be a replacement for the current collar.

Regarding The Well-being of Your Dog:

1. The receiver collar is not a regular collar and is not recommended to be used with a leash while walking your dog. The protruding electrodes on the receiver may hurt the dog if pulled.
2. Do not leave the collar on your dog for more than 12 hours, as it may cause rashes or discomfort to your dog's skin.
3. Do not allow children or anyone with little or no experience in training dogs to handle this training kit.
4. In order to maintain the waterproof function, always insert the waterproof rubber lid over the charging port.
5. Static stimulation is not a pleasant experience for dogs. Using punishment is a harsh way to train a dog. Instead, using praise and positive reinforcement can encourage good behavior in your dog.

Reference Size for Different Dogs

Size	Neck(in)	Chest Measurement(in)	Back Length(in)
Mini	78-8.6	9.8-11.8	7.5
Small	7.8-9.5	11.4-14.2	9
Medium	9-11	13.7-16.5	11
Large	10.6-12.2	16.2-18.5	12.2
Large	11.8-13.4	18.1-20.8	13.8
Large	13-14.5	20.5-23.2	15.7
Huge	17-18.9	30-33	23.6
	18.5-20.5	34.6-38.2	25.6
	21.6-24.4	36.2-39.3	27.5