15.6”
Cozyla Calendar+ Go

User Manual

Important Notices

Copyright Information

All intellectual property rights in this publication are owned by and protected by applicable copyright laws and international treaty provisions. retains all rights not expressly granted. No part of this publication may be reproduced in any form whatsoever or used to make any derivative work without prior written approval by. Reserves the right to revise this publication, and/or make improvements or changes in the product(s) and/or the program(s) described in this documentation at any time without prior notice. The information in this document is provided in good faith, but without any representation or warranty whatsoever, whether it is accurate,or complete or otherwise, and on express understanding that shall have no liability whatsoever to other parties in any way arising from or relating to the information or its use.

All other trademarks are the property of their respective owners. Other company and brand products and service names are trademarks or registered trademarks of their respective holders.

This device complies with CE and FCC regulations.

1) Do not push objects into holes and ventilation slots.
2) Do not expose this product to moisture or place any objects fil ed with liquids on or near the product.
3) Do not place a naked flame sou ce, such as lighted candles, on or near this product.
4) Do not store or operate the device in environments where the temperature is above 50 degrees celsius or below -10 degrees celsius.
5) Do not intentionally hit the device or place heavy or sharp objects on the device. Only use accessories specified by the manu acturer. Keep the device away from benzene, diluents, and other chemicals.
6) Do not attempt to repair this product yourself. Always use a qualified se vice agent to perform adjustments or repairs.

Cozyla Calendar+ Go

Please make sure all of the following are present when you unpack your Cozyla Calendar+ Go.

Cozyla Calendar+ Go

Power adapter

User manual and support documents

Desk stand

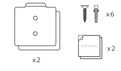

Wall mount

Product Specifications

Specifications vary by model configuration.

System	CPU	Spreadtrum T606 Dual-core A75 1.6Ghz Six-core A55 1.6GHz
	RAM	4G
	Internal memory	64 GB
	Operation system	Android 12
Display	Panel size	15.6" IPS
	Resolution	1920*1080
	Model type	Capacitive touch screen
	Number of points	10-Point
	Color Depth	16.7M
	Aspect ratio	16:9
	Wi-Fi	802.11 a/b/g/n/ac 2.4GHz+5GHz
	Bluetooth	Support
Other	Type_C	For charging only
	Button	Power/Vol+/Vol-
	G-sensor	Support
	Speaker	2W*2
	Microphone	Built in microphone
	Storage temperature	-20℃ --- 60 ℃
	Video playback time(h)	4 hours - 6 hours
	Battery（mAh）	10000mA /3.8V

15.6" Exterior Components

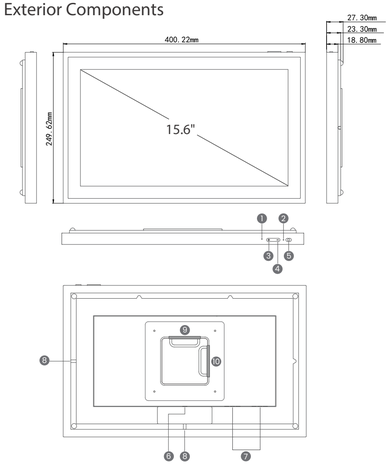

No	Function	No	Function
1	Microphone	6	Type-C port (charging and data only)
2	Reset	7	Speaker
3	Volume +	8	Cable pass-through
4	Volume -	9	Bracket hole (landscape)
5	Power key	10	Bracket hole (portrait)

FCC STATEMENT :

This device complies with Part 15 of the FCC Rules. Operation is subject to the following two conditions:

(1) This device may not cause harmful interference.

(2) This device must accept any interference received, including interference that may cause undesired operation.

Warning: Changes or modifications not expressly approved by the party responsible for compliance could void the user's authority to operate the equipment.

NOTE: This equipment has been tested and found to comply with the limits for a Class B digital device, pursuant to Part 15 of the FCC Rules. These limits are designed to provide reasonable protection against harmful interference in a residential installation. This equipment generates uses and can radiate radio frequency energy and, if not installed and used in accordance with the instructions, may cause harmful interference to radio communications. However, there is no guarantee that interference will not occur in a particular installation. If this equipment does cause harmful interference to radio or television reception, which can be determined by turning the equipment off and on, the user is encouraged to try to correct the interference by one or more of the following measures:

1) Reorient or relocate the receiving antenna.
2) Increase the separation between the equipment and receiver.
3) Connect the equipment into an outlet on a circuit different from that to which the receiver is connected.
4) Consult the dealer or an experienced radio/TV technician for help.

FCC Radiation Exposure Statement:

This equipment complies with FCC radiation exposure limits set forth for an uncontrolled environment. This equipment should be installed and operated with minimum distance 20cm between the radiator & your body.

This symbol on the product or in the instructions means that your electrical and electronic equipment should be disposed of at the end of its life separately from your household waste.There are separate collection systems for recycling in your country. For more information, please contact the local authority or your retailer where you purchased the product.

Cozyla Liability Disclaimer

The Calendar+ Go adhesive mount utilizes 3M adhesive to attach the product to surfaces such as glass, metal, fridge, and cabinets. While the adhesive is designed for secure attachment, prolonged use under various environmental conditions may lead to aging or weakening of the adhesive, which could result in the mount detaching over time. Users are advised to regularly inspect the stability of the mount to prevent accidental detachment. Additionally, adhesive use may cause discoloration or damage to certain surfaces, which can vary based on surface materials and environmental factors.

By using this mounting feature, you expressly acknowledge and accept all inherent risks associated with adhesive use, including but not limited to potential detachment, surface damage, discoloration, personal injury, or damage to property or devices. Cozyla disclaims any liability for any direct, indirect, incidental, or consequential damages to surfaces, property, personal injury, or damage to devices arising from the use or detachment of the adhesive mount. Users agree that they will not hold Cozyla liable for any damages, injuries, or losses resulting from the use, misuse, or failure of the adhesive mount.

By using this product, you agree that Cozyla is not liable for any claims, losses, damages, or injuries arising from the use of the Calendar+ Go adhesive mount and its adhesive, including but not limited to any failure of the mount to adhere properly over time. Your use of this product constitutes acceptance of these terms.

Setup instruction

Cozyla Calendar is recommended for use with Google account and apps. Please scan the QR code below for setup instructions.

Setup instructions

We are ready to support

If you encounter any issues, contact us. Our customer service team will assist you with personalized solutions.

- Customer service: help@cozyla.com
- Live chat: https://www.cozyla.com -> chat with us

NOTE:
Please keep the original packaging materials in case it needs to be returned.

SIZE:148x210MM 材质：**100G** 书写纸黑白印刷， 双面印刷 折页