产品规格承认书

SPECIFICATIONS

客户:

CUSTOMER: _____

产品名称:

DESCRIPTION: Internal Antenna

客户型号:

CUSTOMER PART No: CSA

产品型号:

OUR MODEL NO: **3216MA01**

日期:

DATE: 2019/07/23

确认签字,盖章后请返回承认书一份

PLEASERETRUV TO US ONE COPY OF "SPECIFICATION FOR APPROVAL"

WITY YOUR APPROVED SIGNATURES

核准	高洋	审核	江表强	制作	柯佳烽

客户承认签印	
日期	

UNLESS OTHER SPECIFIED TOLERANCES ON: X=± X.X=± X.XX= ANGLES =± HOLEDIA =±			
SCALE: N/A	UNIT: mm	Shenzhen Famulia Technology Co.,Ltd B 3 floor, Baihua cave Industrial Park, Guangming New District, Shenzhen, China	
DRAWN BY : Sera	CHECKED BY: XD		
DESIGNED BY: Sera	APPROVED BY: XD		
TITLE: CHIP2450-21 Specification		DOCUMENT NO. 3216	SPEC REV. P1

3216MA01 Specification

Operating Temp. : -40℃~+85℃

1. FEATURES:

- Light weight, compact
- Wide bandwidth, low cost
- Built-in antenna with high gain

2. APPLICATIONS:

- Bluetooth, Wireless LAN, Mobile TV
- Home RF system, etc

3. PRODUCT IDENTIFICATION

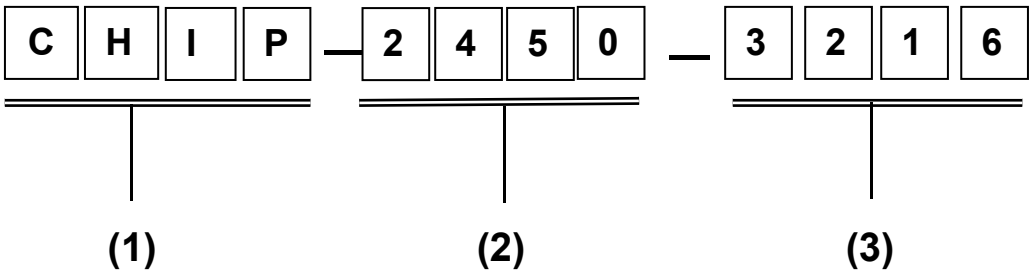

(1) Product type: Multilayer chip Antenna
(2) Center Frequency: 2450MHz
(3) External Dimensions (L×W) (mm): 3.2*1.6

4. SHAPE AND DIMENSIONS:

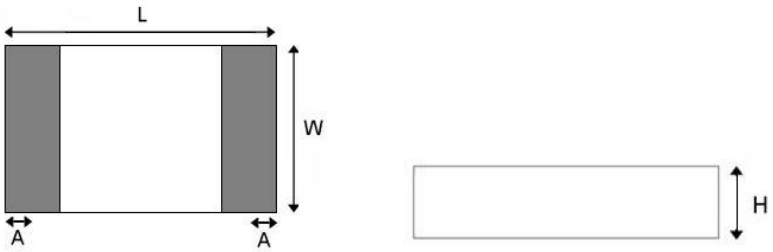

L	W	H	A
3.2±0.3	1.6±0.3	0.52±0.2	0.4±0.25

UNLESS OTHER SPECIFIED TOLERANCES ON: X=± X.X=± X.XX= ANGLES =± HOLEDIA =±				
SCALE: N/A	UNIT: mm	Shenzhen Famulia Technology Co.,Ltd B 3 floor, Baihua cave Industrial Park, Guangming New District, Shenzhen, China		
DRAWN BY : Sera	CHECKED BY: XD			
DESIGNED BY: Sera	APPROVED BY: XD			
TITLE: CHIP2450-21 Specification		DOCUMENT NO.	3216	SPEC REV. P1

mm

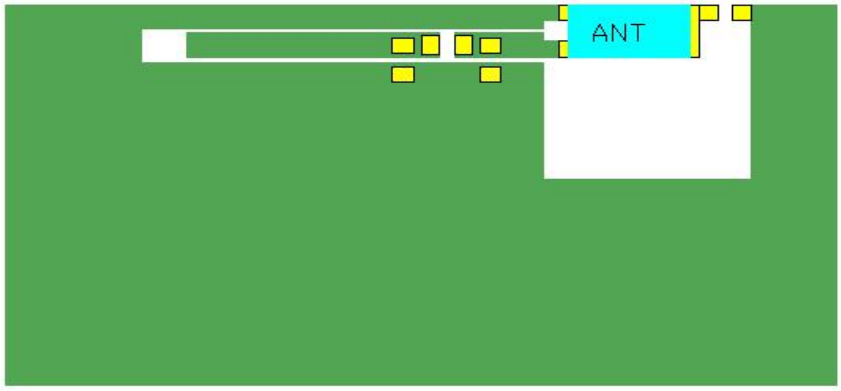

天线
PAD
底层铺铜
顶层铺铜

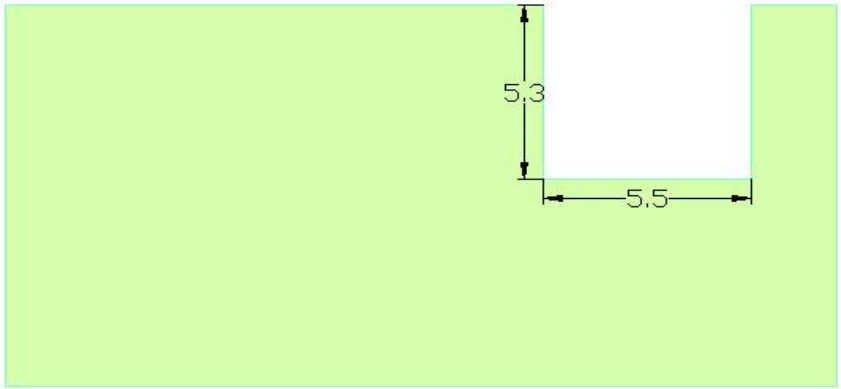

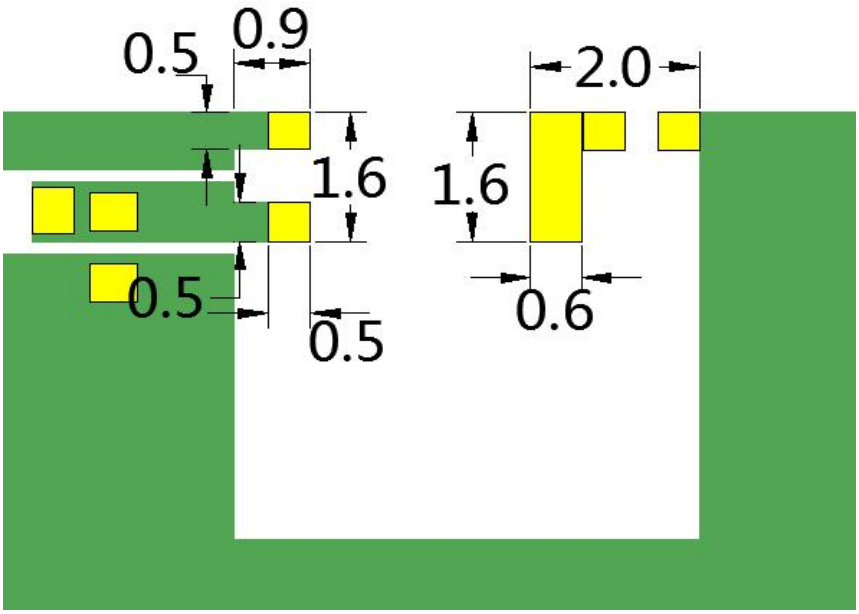

UNLESS OTHER SPECIFIED TOLERANCES ON: X=± X.X=± X.XX= ANGLES =± HOLEDIA =±			
SCALE：N/A	UNIT：mm	Shenzhen Famulia Technology Co.,Ltd B 3 floor, Baihua cave Industrial Park, Guangming New District, Shenzhen, China	
DRAWN BY : Sera	CHECKED BY: XD		
DESIGNED BY: Sera	APPROVED BY: XD		
TITLE：CHIP2450-21 Specification		DOCUMENT NO. 3216	SPEC REV. P1

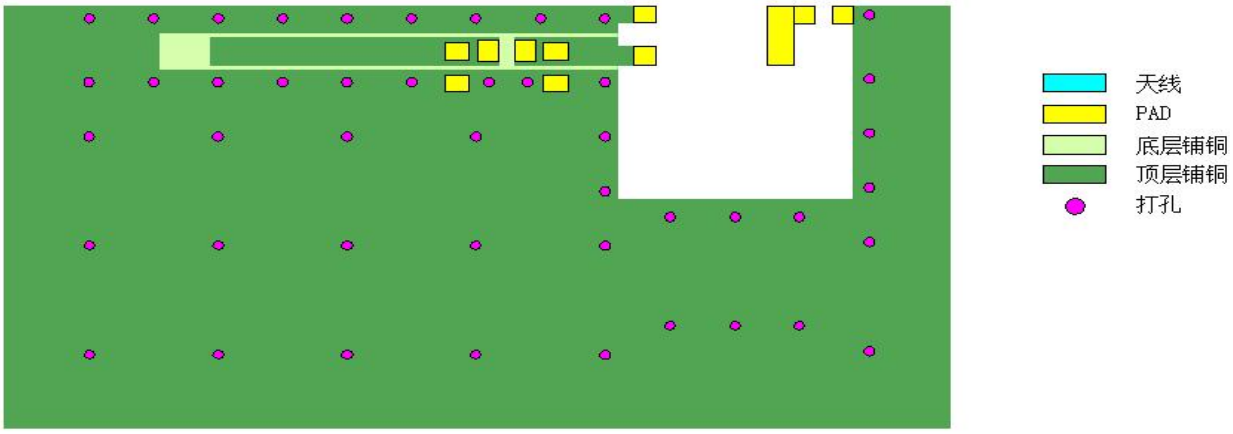

APPLICATION GUIDE

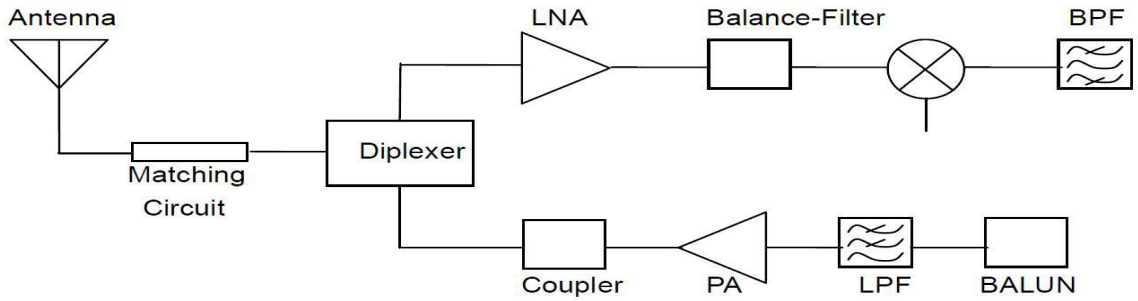

5. SPECIFICATIONS:

Frequency	2.4 – 2.5 GHz
Impedance	50ohm nominal
V.S.W.R	≤1.92
Return loss	≤-10dB
Radiation	Omni-directional
Gain (Peak)	2G: 2.67dBi

* Test condition: Test board size 90*40 mm

Matching circuit: Pi matching circuit will be required

6. Electrical Characteristics :

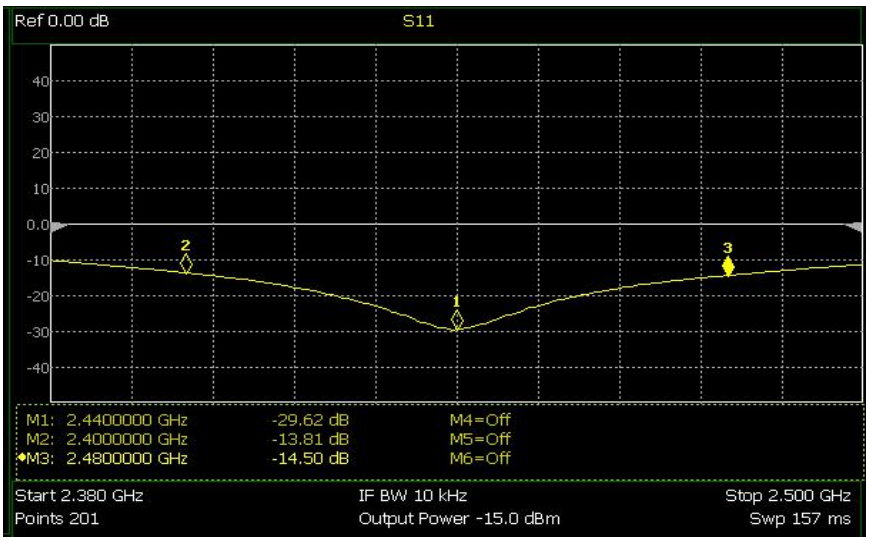

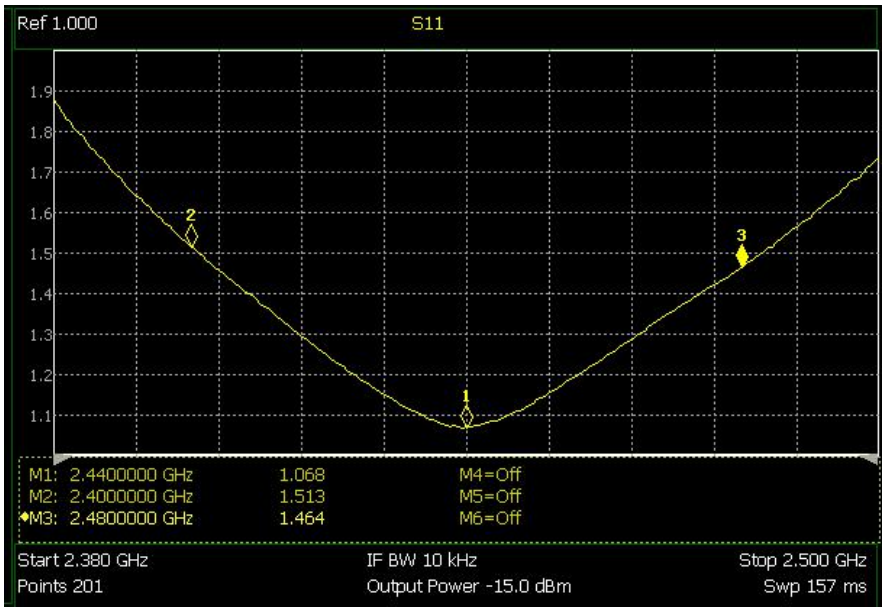

Mark	Frequency	VSWR
1	2400 MHz	1.513
2	2440 MHz	1.068
3	2480 MHz	1.464

Radiation Pattern

The Gain pattern is measured in FAR-field chamber. DUT is placed on the table of rotator,a standard horn antenna and Vector Network Analyzer is used to collect data.

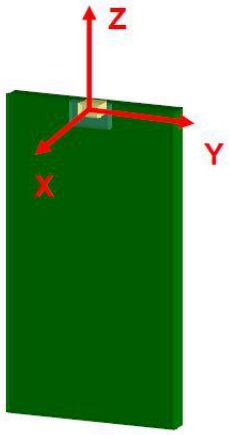

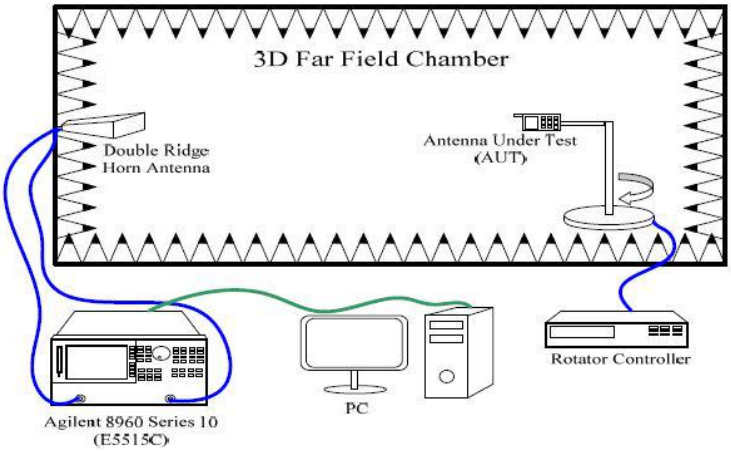

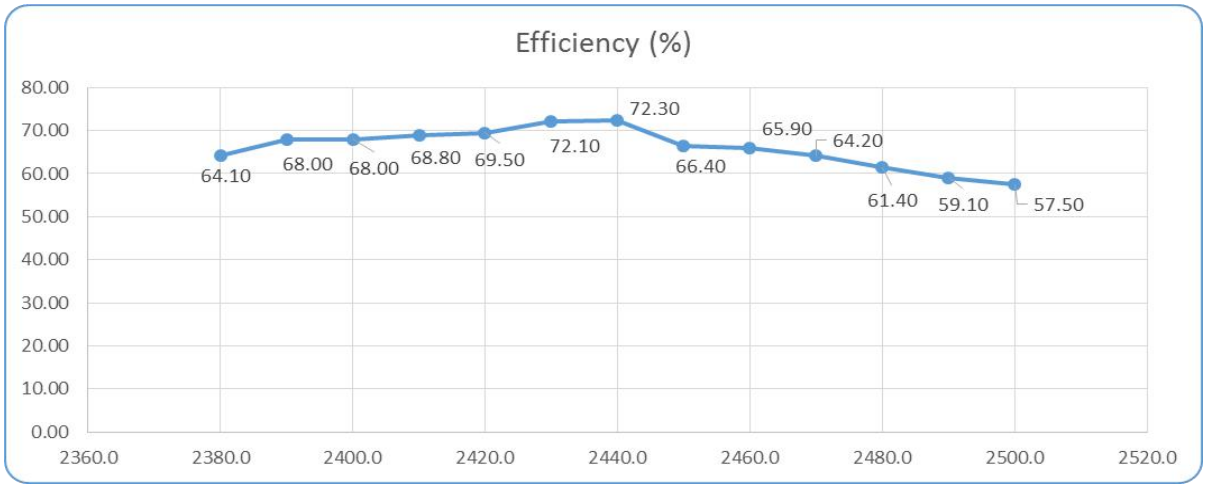

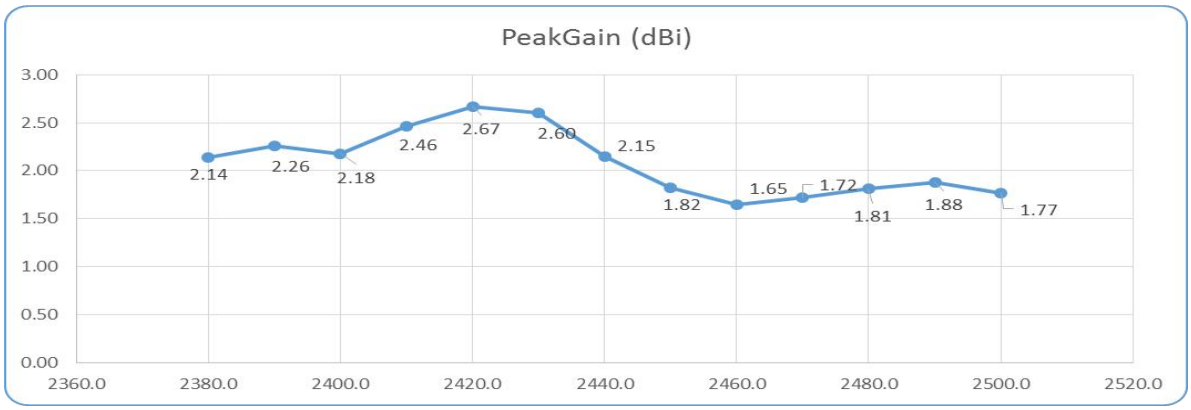

UNLESS OTHER SPECIFIED TOLERANCES ON: X=± X.X=± X.XX= ANGLES =± HOLEDIA =±			
SCALE：N/A	UNIT：mm	Shenzhen Famulia Technology Co.,Ltd B 3 floor, Baihua cave Industrial Park, Guangming New District, Shenzhen, China	
DRAWN BY : Sera	CHECKED BY: XD		
DESIGNED BY: Sera	APPROVED BY: XD		
TITLE：CHIP2450-21 Specification		DOCUMENT NO. 3216	SPEC REV. P1

◎ **3D Gain Pattern (2400 MHz)**

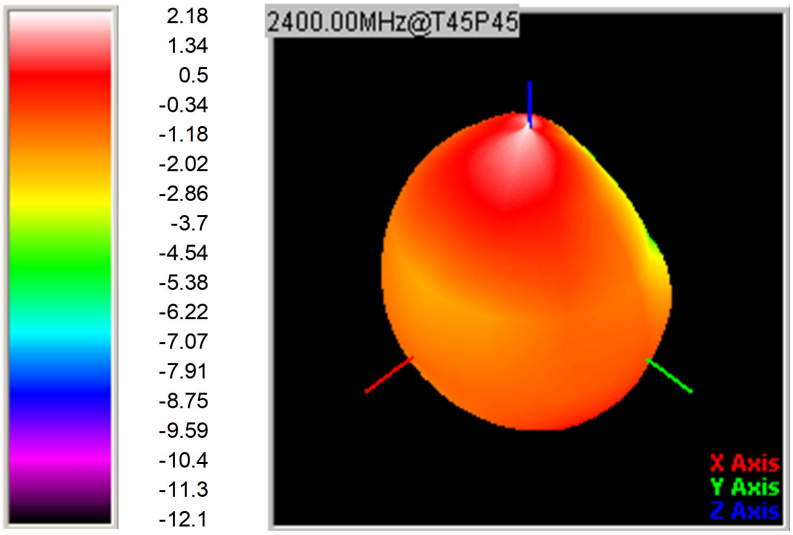

◎ **3D Gain Pattern (2440 MHz)**

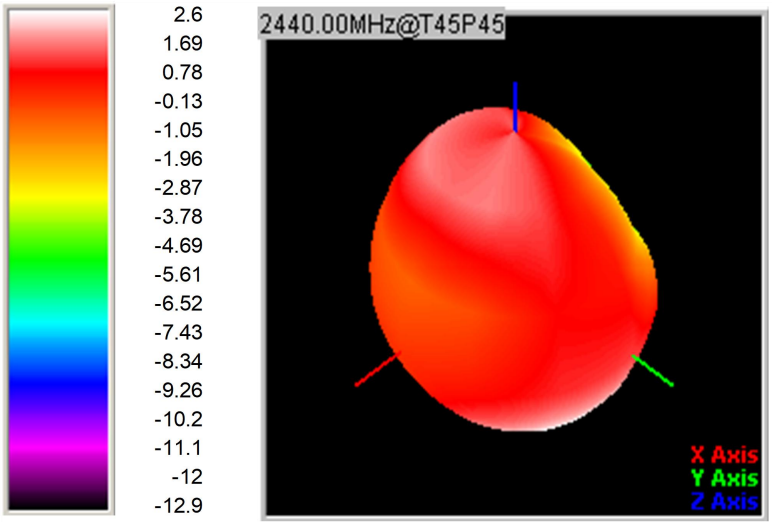

◎ **3D Gain Pattern (2480 MHz)**

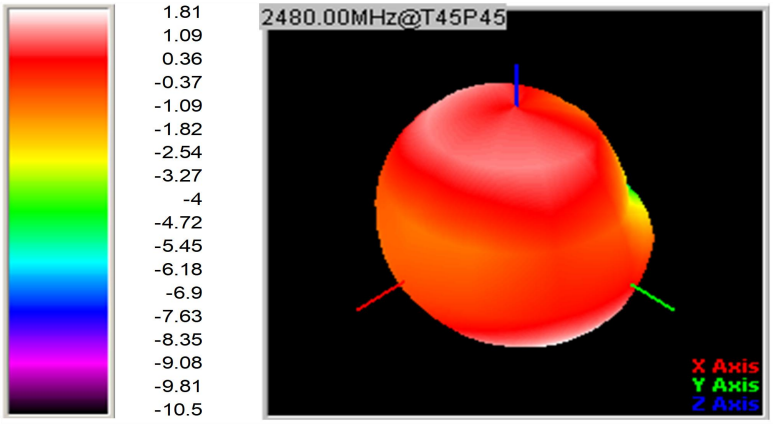

UNLESS OTHER SPECIFIED TOLERANCES ON: X=± X.X=± X.XX= ANGLES =± HOLEDIA =±		
SCALE: N/A	UNIT: mm	Shenzhen Famulia Technology Co.,Ltd B 3 floor, Baihua cave Industrial Park, Guangming New District, Shenzhen, China
DRAWN BY : Sera	CHECKED BY: XD	
DESIGNED BY: Sera	APPROVED BY: XD	

TITLE: CHIP2450-21 Specification	DOCUMENT NO.	3216	SPEC REV. P1

7. Environmental Characteristics

(1) Reliability Test

Item	Condition	Specification
Thermal shock	1. 30±3 minutes at -40° C±5° C, 2. Convert to +105° C (5 minutes) 3. 30±3 minutes at +105° C±5° C, 4. Convert to -40° C (5 minutes) 5. Total 100 continuous cycles	No apparent damage Fulfill the electrical spec. after test.
Humidity resistance	1. Humidity: 85% R.H. 2. Temperature: 85±5° C 3. Time: 1000 hours.	No apparent damage Fulfill the electrical spec. after test.
High temperature resistance	1. Temperature: 150° C±5° C 2. Time: 1000 hours.	No apparent damage Fulfill the electrical spec. after test.
Low temperature resistance	1. Temperature: -40° C±5° C 2. Time: 1000 hours.	No apparent damage Fulfill the electrical spec. after test.
Soldering heat resistance	1. Solder bath temperature : 260±5℃ 2. Bathing time: 10±1 seconds	No apparent damage
Solderability	The dipped surface of the terminal shall be at least 95% covered with solder after dipped in solder bath of 245±5℃ for 3±1 seconds.	No apparent damage

(2) Storage Condition

(a) At warehouse:

The temperature should be within 0 ~ 30℃ and humidity should be less than 60% RH.

The product should be used within 1 year from the time of delivery.

(b) On board:

The temperature should be within -40~85℃ and humidity should be less than 85% RH.

(3) Operating Temperature Range

Operating temperature range : -40℃ to +105℃.

8. Recommended Reflow Soldering

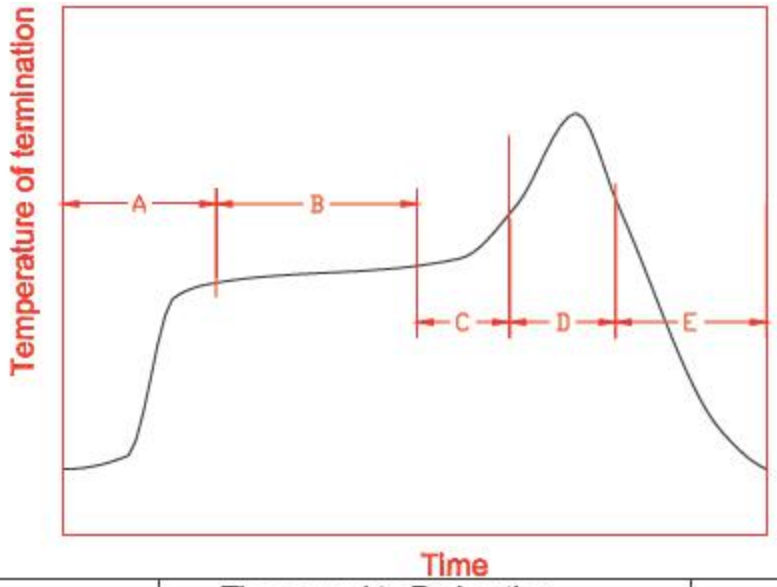

A	1st rising temperature	The normal to Preheating temperature	30s to 60s
B	Preheating	140℃ to 160℃	60s to 120s
C	2nd rising temperature	Preheating to 200℃	20s to 40s
D	Main heating	if 220℃	50s～60s
		if 230℃	40s～50s
		if 240℃	30s～40s
		if 250℃	20s～40s
		if 260℃	20s～40s
E	Regular cooling	200℃ to 100℃	1℃/s ～ 4℃/s

*reference: J-STD-020C

(1) Soldering Gun Procedure

Note the follows, in case of using solder gun for replacement.

(a) The tip temperature must be less than 350° C for the period within 3 seconds by using soldering gun under 30 W.

(b) The soldering gun tip shall not touch this product directly.

(2) Soldering Volume

Note that excess of soldering volume will easily get crack the body of this product.

9. Taping Package and Label Marking: (unit: mm)

(1) Quantity/Reel: 5000pcs/Reel

(2) Carrier tape dimensions

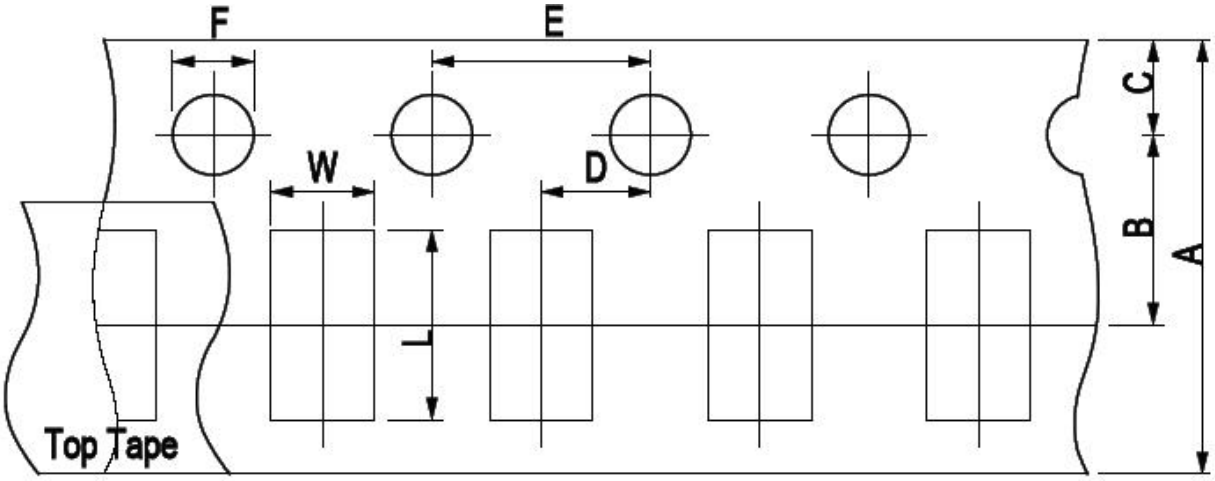

Type	A	B	C	D	E	F	L	W
2450-21	8.00±0.3	3.50±0.05	1.75±0.1	2.00±0.05	4.00±0.1	1.50±0.1	2.30±0.1	1.55±0.1

(3) Taping reel dimensions

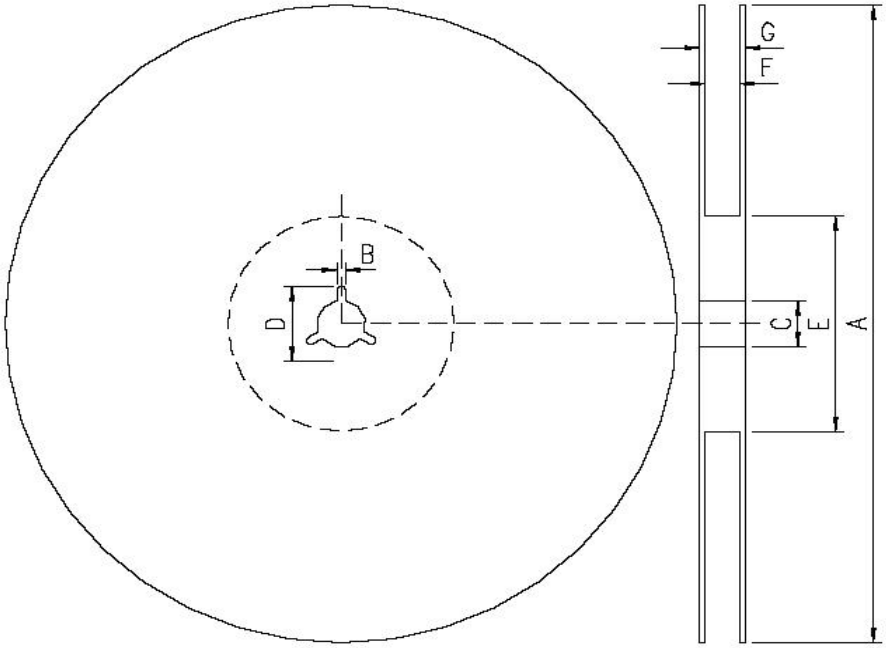

A	178.0±2.0
B	2.0±0.5
C	13.0±0.5
D	21.0±0.8
E	62.0±1.5
F	9.0±0.5
G	13.0±1.0

UNLESS OTHER SPECIFIED TOLERANCES ON: X=± X.X=± X.XX= ANGLES =± HOLEDIA =±			
SCALE: N/A	UNIT: mm	Shenzhen Famulia Technology Co.,Ltd B 3 floor, Baihua cave Industrial Park, Guangming New District, Shenzhen, China	
DRAWN BY : Sera	CHECKED BY: XD		
DESIGNED BY: Sera	APPROVED BY: XD		
TITLE: CHIP2450-21 Specification		DOCUMENT NO. 3216	SPEC REV. P1