150mm

60mm

USER MANUAL

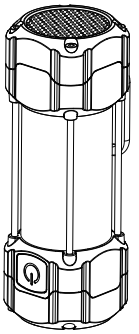

What's in the box?
1. Speaker*1
2. User manual*1
3. Type-C cable*1

MADE IN CHINA
FCC ID: 2BCGV0028

Overview
1. Flashlight
2. LED lamp
3. Power/Function button
4. Type-C port
5. LED Indicator
6. Bluetooth LED Indicator

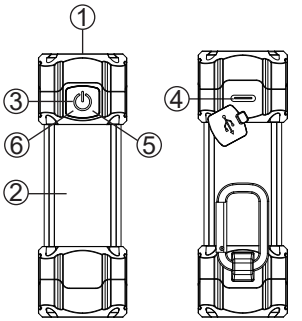

Specifications:
1. Model: SL595
2. Item: 20113
3. Input: DC 5V/1A
4. Speaker output power: 5W
5.LED lamp:3.5W
6. Flashlight: 3W
7. Battery capacity: 3.7V/1800mAh, 6.66Wh

Operation Instructions
1. Power On: Long press the power button to turn on the speaker, you will hear a tone.
2. Pairing: Once speaker is turned on, open your mobile device, search the wireless devices, and select wireless ID '20113', It will pair automatically. The Bluetooth LED indicator will blink in pairing and illuminate a solid blue after paired successfully.
3. Flashlight/LED lamp: Tap the function button cyclically to Flashlight Level 1- Flashlight Level 2- Flashlight blink- LED lamp ON- LED lamp SOS- turn off.
4. Charging: Use the Type-C cable included to connect the speaker to a certified computer or adaptor, the LED indicator will flash. When the speaker is fully charged, the LED indicator will illuminate a solid red.
5. Power Off: Long press the power button to turn off the speaker.

50mm

Caution:
1. Please enjoy music with an appropriate volume, which will avoid to damage your hearing and sound system.
2. Please avoid exposure, rain, water droplets, avoid prolonged exposure to high temperature, high humidity environment.
3. During use, please make it away from heat, high pressure, and prevent children from playing with this product.
4. Please use the power which meets the requirements.
5. Do not drop or bump and applied heavy pressure to avoid damage to the product.

FCC STATEMENT
This device complies with Part 15 of the FCC Rules. Operation is subject to the following two conditions:
(1) This device may not cause harmful interference, and
(2) This device must accept any interference received, including interference that may cause undesired operation.

Warning: Any changes or modifications not expressly approved by the party responsible for compliance could void the user's authority to operate the equipment.

NOTE: This equipment has been tested and found to comply with the limits for a Class B digital device, pursuant to Part 15 of the FCC Rules. These limits are designed to provide reasonable protection against harmful interference in a residential installation.
This equipment generates uses and can radiate radio frequency energy and, if not installed and used in accordance with the instructions, may cause harmful interference to radio communications. However, there is no guarantee that interference will not occur in a particular installation. If this equipment does cause harmful interference to radio or television reception, which can be determined by turning the equipment off and on, the user is encouraged to try to correct the interference by one or more of the following measures:
- Reorient or relocate the receiving antenna.
- Increase the separation between the equipment and receiver.
- Connect the equipment into an outlet on a circuit different from that to which the receiver is connected.
- Consult the dealer or an experienced radio/ TV technician for help.

RF Statement
The device has been evaluated to meet general RF exposure requirement. The device can be used in portable exposure condition without restriction.

The Bluetooth word mark and logos are registered trademarks owned by Bluetooth SIG, Inc., and any use of such marks by (Shenzhen SHD Electronic Tech. Co., Ltd.) is under license. Other trademarks and trade names are those of their respective owners.

Bluetooth Listing Declaration ID: D063501