User Guide

Tapo Video Doorbell Camera

Tapo D210 TD21

©2024 TP-Link 1910013536 REV1.0.0

Contents

About This Guide 1

Introduction 2

Preparations for Installing Your Doorbell 3

Install Your Doorbell 4

Set Up Your Doorbell and Chime 6

Set Up Using Amazon Frustration-Free Setup 8

Authentication 12

About This Guide

This guide provides a brief introduction to the Smart Video Doorbell Camera and the Tapo app, as well as regulatory information.

Please note that features available in Tapo may vary by model and software version. Tapo availability may also vary by region. All images, steps, and descriptions in this guide are only examples and may not reflect your actual Tapo Camera experience.

Conventions

In this guide, the following convention is used:

Convention	Description
Blue	Key information appears in blue, including management page text such as menus, items, buttons and so on.
Underline	Hyperlinks are in blue and underlined. You can click to redirect to a website.
Note:	Ignoring this type of note might result in a malfunction or damage to the device.

More Info

- Specifications can be found on the product page at https://www.tapo.com.
- Our Technical Support and troubleshooting information can be found at https://www.tapo.com/support/.

Introduction

Replace your existing wired doorbell with a smarter one and answer your door from anywhere with your phone. Receive instant notifications whenever someone comes by—even before they knock. Keep an eye out for the visitors, or possible intruders 24/7 with crystal clear video and audio.

- 2K 3MP Ultra-Clear Images – Always know what happens in front of your door through the Tapo app. With the starlight sensor and 2K 3MP resolution, check all the fine details captured even in low-light environments.
- 160° Ultra-Wide Diagonal FOV* – Receive head-to-toe views even when visitors stand too close to the doorbell with a 160° ultra-wide diagonal FOV.
- Color Night Vision – Reveals high-fidelity details and color at night with the starlight sensor.
- Quick Response – Respond to your deliveries without saying a word with customizable responses through the Tapo app.
- Multiple Ways to Answer – With two-way audio or a recorded quick response, communicate directly with your deliveries through the Tapo app.
- Flexible Storage Choices – Save recorded videos on the microSD card† (up to 512 GB) or by using Tapo Care** cloud storage services.
- Two-Way Audio – Enables communication through a built-in microphone and speaker.
- IP65 Weatherproof – Offers excellent waterproof and dustproof performance for outdoor scenarios.
- Free AI Detection – Enjoy free AI detection to identiy people and vehicles, and notify you as needed.

Preparations for Installing Your Doorbell

Before installing the new doorbell, remove your existing doorbell, and determine if you need a mounting wedge to adjust the viewing angle of the doorbell.

1. Install the doorbell on a flat and clean wall.
2. The doorbell should be placed 1.2 m (4 ft) above the ground.
3. (Optional) Use the included 15° mounting wedge for a more focused view from a specific side.

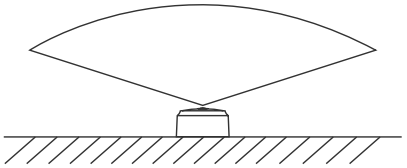

Without
Mounting Wedge

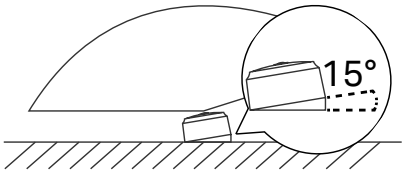

With
Mounting Wedge

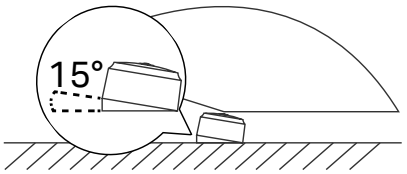

With
Mounting Wedge
(Flip 180°)

4. Avoid placing the doorbell close to a side wall in the field of view. If you must, use the mounting wedge to adjust the viewing angle to reduce reflected light from the wall for better night vision performance.

Install Your Doorbell

Follow the steps below to install your new doorbell.

Option 1. Stick to a clean wall

1. Attach the included adhesive to the bracket.
Note: The adhesive is for one-time use. Avoid re-using the adhesive to ensure its adhesion.

2. Wipe off the dust from the surface, stick the bracket with adhesive to a clean wall, and press it down for 15 seconds to ensure the bracket is firmly attached. Then starting from the bottom, attach the doorbell to the bracket.
Note: This is applicable with tile, glass, marble, metal, stainless steel, and smooth wall surfaces.

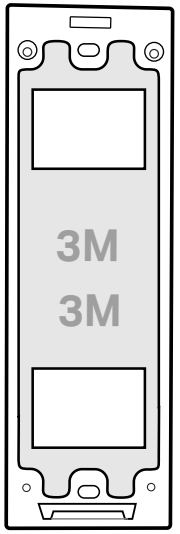

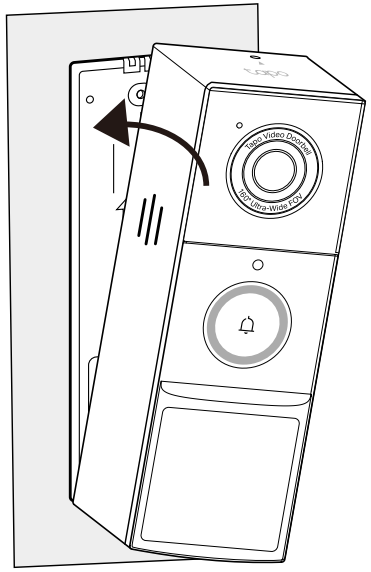

Optional)
Use 15° Mounting Wedge to Adjust Angle

1. Affix the wedge and bracket with screws. Attach the included adhesive to the wedge.

2. Stick the wedge to a clean wall. Then starting from the bottom, attach the doorbell to the bracket.

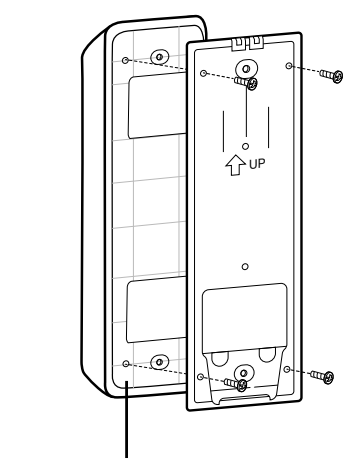

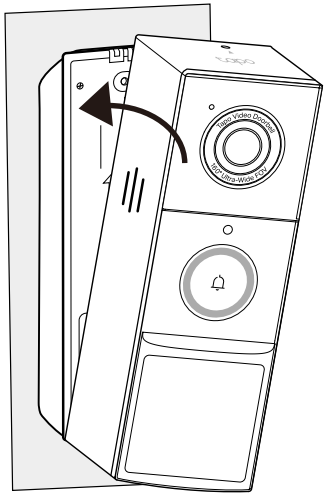

Install Your Doorbell

Follow the steps below to install your new doorbell.

Option 2. Mount to the wall

1. Stick the mounting template to the desired place. Drill two holes according to the template. Insert two anchors into the holes. Use the screws to affix the bracket over the anchors.
Note: When mounting to uneven walls, stick the foam pad on the back of the bracket.

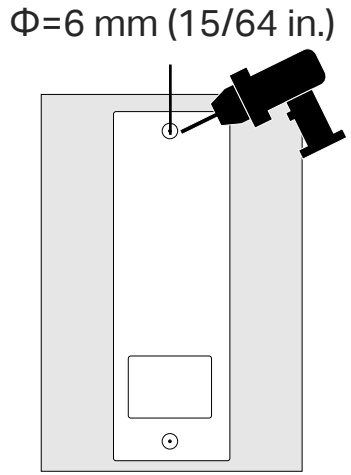

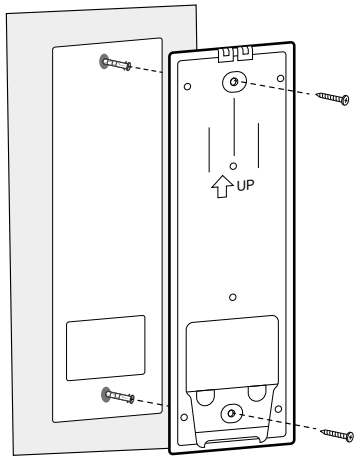

2. Starting from the bottom, attach the doorbell to the bracket.
Note: If you have trouble attaching the doorbell to the bracket, check if you tightened the screws too much that the bracket bent. Adjust the depth of the screw and then reinstall the doorbell.

Optional)
Use 15° Mounting Wedge to Adjust Angle

1. Use the screws to affix the wedge with bracket over the anchors.
Note: When mounting to uneven walls, stick the foam pad on the back of the wedge.

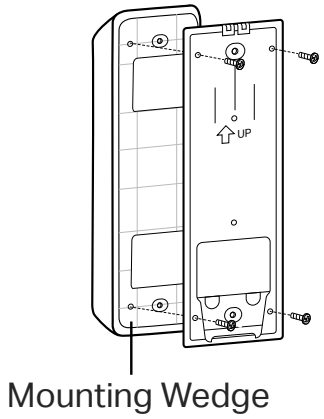

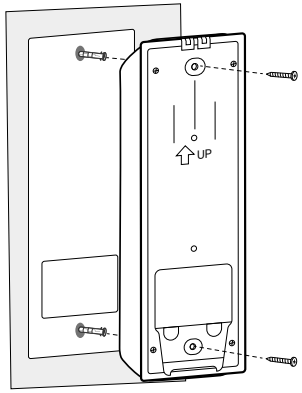

2. Starting from the bottom, attach the doorbell to the bracket.

Set Up Your Doorbell and Chime

After installing the doorbell, follow the steps below to set up the doorbell, and pair with the chime.

Step 1. Download Tapo App

Get the Tapo app from the App Store or Google Play, or by scanning the QR code below.

Download on the App Store

GET IT ON Google Play

OR

Step 2. Log In

Open the app, and log in with your TP-Link ID. If you don't have an account, create one first.

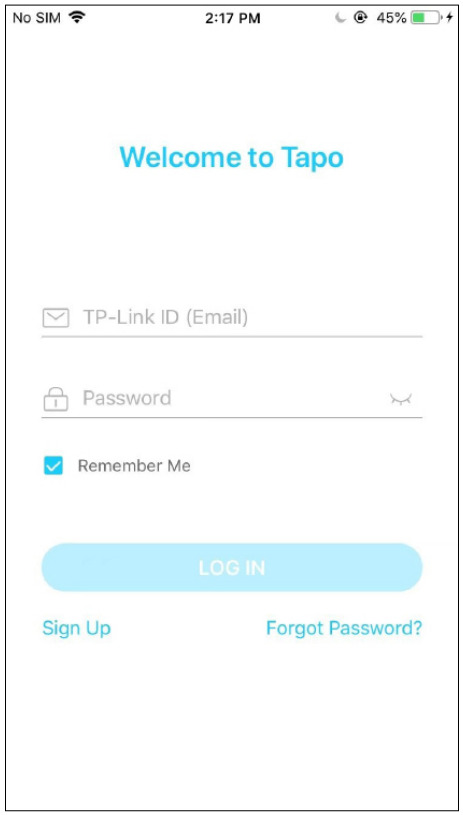

Step 3. Add Your Camera

Tap the ⊕ button in the app and search for your model. Follow the app instructions to set up your doorbell. Then plug in your chime and pair with the doorbell.

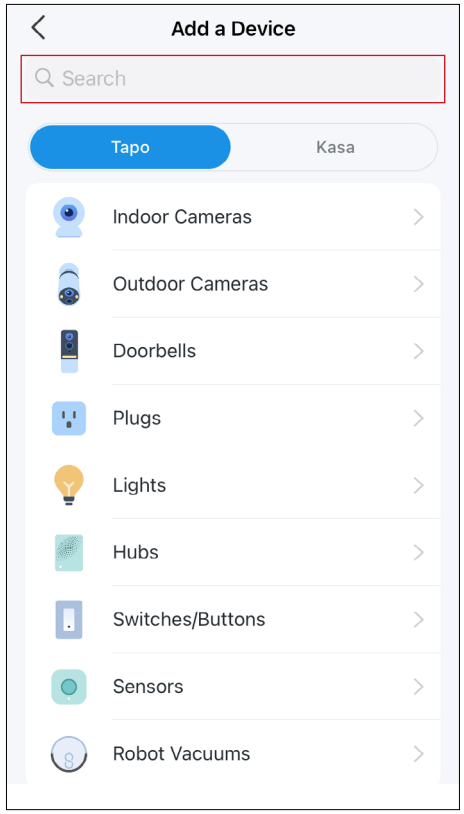

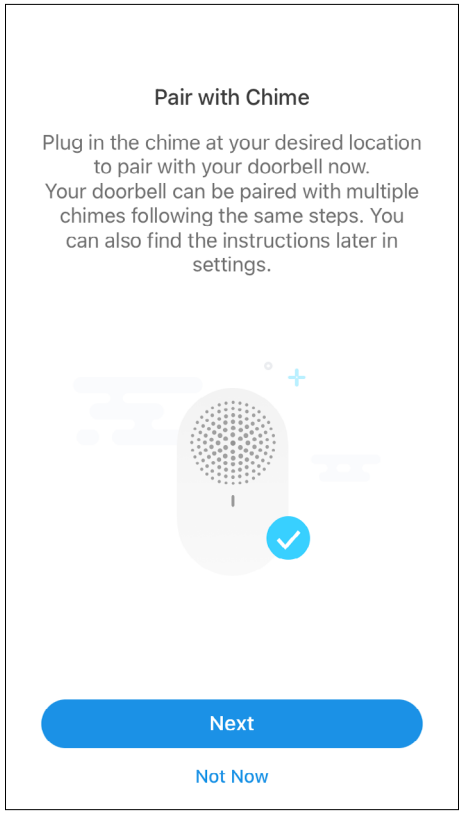

Set Up Using Amazon Frustration-Free Setup

What is Amazon Frustration-Free Setup?

Amazon Frustration-Free Setup can help connect and set up Tapo smart devices in fewer steps, without having to remember and re-enter your Wi-Fi password on each device.

To use this feature, confirm the following:

- The new Tapo device supports Amazon FFS.
- The new Tapo device is purchased from Amazon.
- You have an Amazon FFS enabled Alexa device or router.
- You have saved your Wi-Fi information to Amazon by using Alexa echo.
- Your Tapo device and router are on the same network as your Alexa echo.

LED Indications during Amazon Frustration-Free Setup

LED	Status
Blinking red and green	Ready for setup
Blinking amber	FFS setup in progress
Solid green	Working properly

If the LED does not turn solid green after a long time, you can try to add the Tapo device manually. (Press the Reset button on your Tapo device once. Then open the Tapo app, tap the + button on the page, select your device model, and follow the app instructions.)

How to use Amazon Frustration-Free Setup with Tapo devices

1. Open the Amazon Alexa app. Then tap More and select Skills & Games.

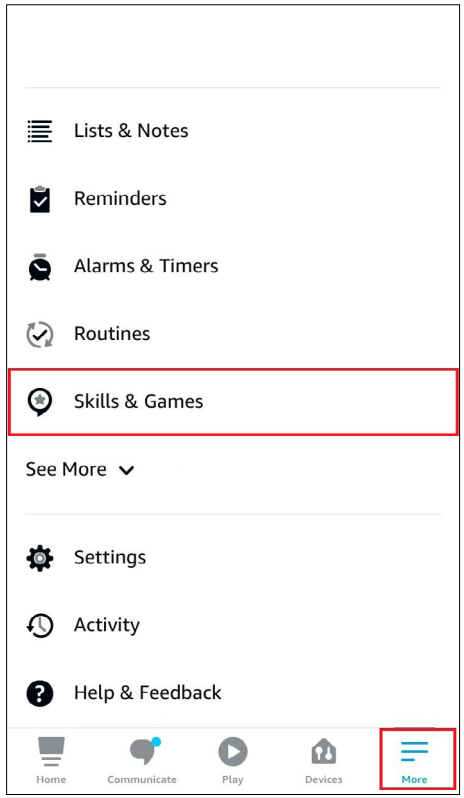

2. Enter Tapo in the search bar and choose Tapo.

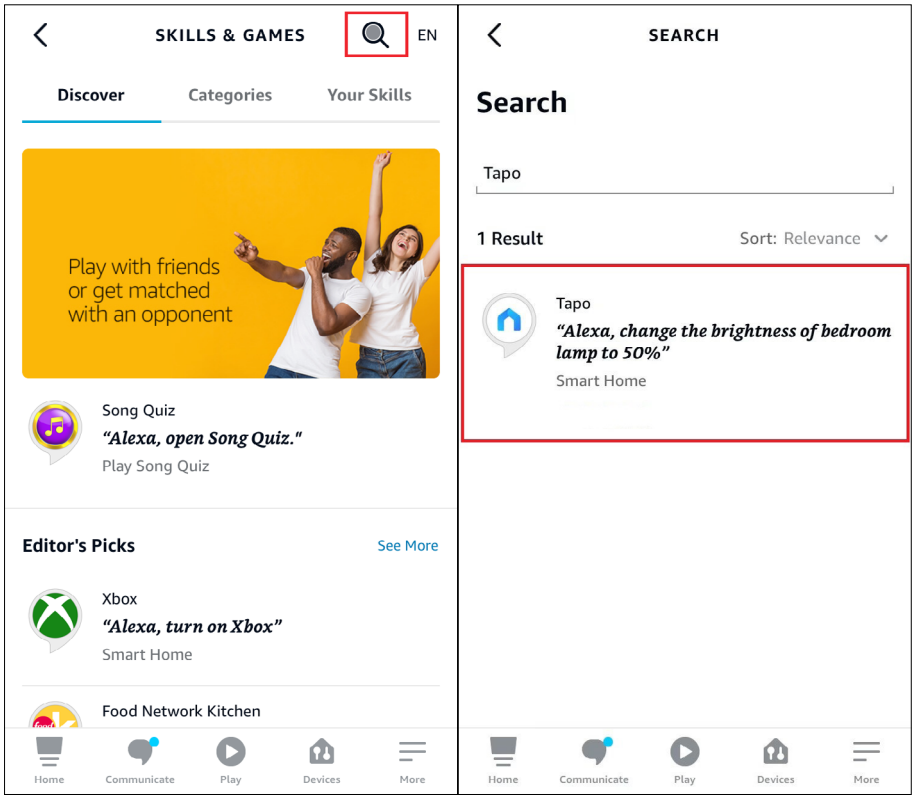

3. Tap the ENABLE TO USE button.

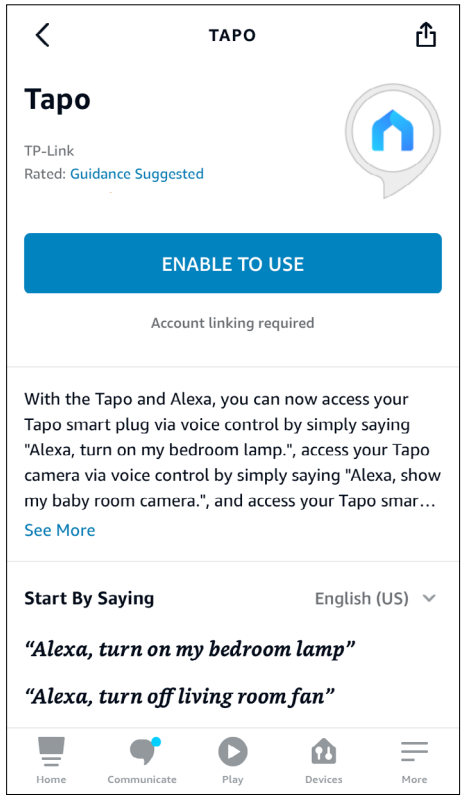

4. Log in with your TP-Link ID that has bound to your Tapo device, and tap Authorize. After authorized successfully, the message Tapo has been successfully linked will come up.

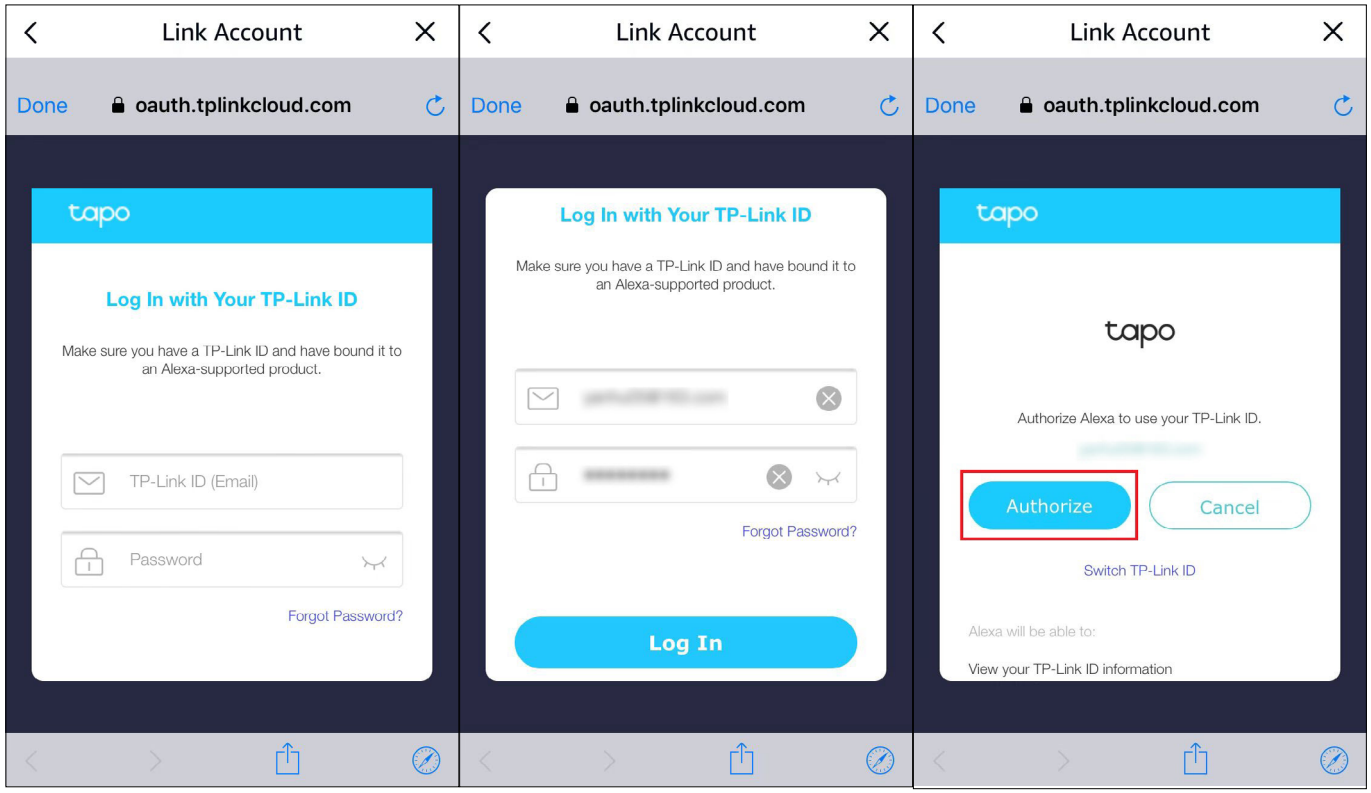

5. Plug in your Tapo device and the setup will complete automatically in two minutes.

For setting up more Tapo devices, just plug in and enjoy!

Done!

If this device displays on the Home page in the Tapo app, it indicates this device has been successfully associated with your Amazon account and joined your Wi-Fi network automatically.

If this device does not display on the Home page in the Tapo app, try setting it up manually. (Tap the + button on the page, select your device model, and then follow the app instructions.)

Authentication

FCC compliance information statement

Product Name: Tapo Video Doorbell Camera
Model Number: Tapo D210/TD21
Responsible Party:
TP-Link USA Corporation
Address: 10 Mauchly, Irvine, CA 92618
Website: https://www.tp-link.com/us/
Tel: +1 626 333 0234
Fax: +1 909 527 6804
E-mail: sales.usa@tp-link.com

This equipment has been tested and found to comply with the limits for a Class B digital device, pursuant to part 15 of the FCC Rules. These limits are designed to provide reasonable protection against harmful interference in a residential installation. This equipment generates, uses and can radiate radio frequency energy and, if not installed and used in accordance with the instructions, may cause harmful interference to radio communications. However, there is no guarantee that interference will not occur in a particular installation. If this equipment does cause harmful interference to radio or television reception, which can be determined by turning the equipment off and on, the user is encouraged to try to correct the interference by one or more of the following measures:

- Reorient or relocate the receiving antenna.
- Increase the separation between the equipment and receiver.
- Connect the equipment into an outlet on a circuit different from that to which the receiver is connected.
- Consult the dealer or an experienced radio/ TV technician for help.

This device complies with part 15 of the FCC Rules. Operation is subject to the following two conditions:

1. This device may not cause harmful interference.

2. This device must accept any interference received, including interference that may cause undesired operation.

Any changes or modifications not expressly approved by the party responsible for compliance could void the user's authority to operate the equipment.

Note: The manufacturer is not responsible for any radio or TV interference caused by unauthorized modifications to this equipment. Such modifications could void the user's authority to operate the equipment.

FCC RF Radiation Exposure Statement

This equipment complies with FCC RF radiation exposure limits set forth for an uncontrolled environment. This device and its antenna must not be co-located or operating in conjunction with any other antenna or transmitter.

"To comply with FCC RF exposure compliance requirements, this grant is applicable to only Mobile Configurations. The antennas used for this transmitter must be installed to provide a separation distance of at least 20 cm from all persons and must not be co-located or operating in conjunction with any other antenna or transmitter."

We, **TP-Link USA Corporation**, has determined that the equipment shown as above has been shown to comply with the applicable technical standards, FCC part 15. There is no unauthorized change is made in the equipment and the equipment is properly maintained and operated.

Issue Date: 2024-02-27

CE Mark Warning

This is a class B product. In a domestic environment, this product may cause radio interference, in which case the user may be required to take adequate measures.

OPERATING FREQUENCY (the maximum transmitted power)

2412MHz—2472MHz (20dBm)

EU Declaration of Conformity

TP-Link hereby declares that the device is in compliance with the essential requirements and other relevant provisions of directives 2014/53/EU, 2009/125/EC, 2011/65/EU and (EU)2015/863.

The original EU Declaration of Conformity may be found at https://www.tapo.com/en/support/ce/.

RF Exposure Information

This device meets the EU requirements (2014/53/EU Article 3.1a) on the limitation of exposure of the general public to electromagnetic fields by way of health protection.

The device complies with RF specifications when the device used at 20 cm from your body.

UKCA Mark

UK Declaration of Conformity

TP-Link hereby declares that the device is in compliance with the essential requirements and other relevant provisions of the Radio Equipment Regulations 2017.

The original UK Declaration of Conformity may be found at https://www.tapo.com/support/ukca/.

Canadian Compliance Statement

This device contains licence-exempt transmitter(s)/receiver(s) that comply with Innovation, Science and Economic Development Canada's licence-exempt RSS(s). Operation is subject to the following two conditions:

1. This device may not cause interference.

2. This device must accept any interference, including interference that may cause undesired operation of the device.

L'émetteur/récepteur exempt de licence contenu dans le présent appareil est conforme aux CNR d'Innovation, Sciences et Développement économique Canada applicables aux appareils radio exempts de licence. L'exploitation est autorisée aux deux conditions suivantes :

1. l'appareil ne doit pas produire de brouillage;

2. l'utilisateur de l'appareil doit accepter tout brouillage radioélectrique subi, meme si le brouillage est susceptible d'en compromettre le fonctionnement

The device meets the exemption from the routine evaluation limits in section 2.5 of RSS 102 and compliance with RSS-102 RF exposure, users can obtain Canadian information on RF exposure and compliance.
Le dispositif rencontre l'exemption des limites courantes d'évaluation dans la section 2.5 de RSS 102 et la conformité à l'exposition de RSS-102 rf, utilisateurs peut obtenir l'information canadienne sur l'exposition et la conformité de rf.

This transmitter must not be co-located or operating in conjunction with any other antenna or transmitter. This equipment should be installed and operated with a minimum distance of 20 centimeters between the radiator and your body.

Cet émetteur ne doit pas être Co-placé ou ne fonctionnant en même temps qu'aucune autre antenne ou émetteur. Cet équipement devrait être installé et actionné avec une distance minimum de 20 centimètres entre le radiateur et votre corps.

Radiation Exposure Statement:

This equipment complies with IC radiation exposure limits set forth for an uncontrolled environment. This equipment should be installed and operated with minimum distance 20cm between the radiator & your body.

Déclaration d'exposition aux radiations:

Cet équipement est conforme aux limites d'exposition aux rayonnements IC établies pour un environnement non contrôlé. Cet équipement doit être installé et utilisé avec un minimum de 20 cm de distance entre la source de rayonnement et votre corps.

Industry Canada Statement

CAN ICES-3 (B)/NMB-3(B)

Korea Warning Statements:

당해 무선설비는 운용중 전파혼신 가능성이 있음.

NCC Notice & BSMI Notice

注意！

取得審驗證明之低功率射頻器材，非經核准，公司、商號或使用者均不得擅自變更頻率、加大功率或變更原設計之特性及功能。

低功率射頻器材之使用不得影響飛航安全及干擾合法通信；經發現有干擾現象時，應立即停用，並改善至無干擾時方得繼續使用。

前述合法通信，指依電信管理法規定作業之無線電通信。

低功率射頻器材須忍受合法通信或工業、科學及醫療用電波輻射性電機設備之干擾。

為避免本器材影像畫面遭偷窺或擷取，本器材使用者應先修改預設密碼，並定期更新密碼。

安全諮詢及注意事項

- 請使用原裝電源供應器或只能按照本產品注明的電源類型使用本產品。
- 清潔本產品之前請先拔掉電源線。請勿使用液體、噴霧清潔劑或濕布進行清潔。
- 注意防潮，請勿將水或其他液體潑灑到本產品上。
- 插槽與開口供通風使用，以確保本產品的操作可靠並防止過熱，請勿堵塞或覆蓋開口。
- 請勿將本產品置放於靠近熱源的地方。除非有正常的通風，否則不可放在密閉位置中。
- 不要私自拆開機殼或自行維修，如產品有故障請與原廠或代理商聯繫。

限用物質含有情況標示聲明書

設備名稱：Tapo Video Doorbell Camera Equipment name				型號（型式）：Tapo D210 Type designation (Type)		
單元 Unit	限用物質及其化學符號 Restricted substances and its chemical symbols					
	鉛 Lead (Pb)	汞 Mercury (Hg)	鎘 Cadmium (Cd)	六價鉻 Hexavalent chromium (Cr^{+6})	多溴聯苯 Polybrominated biphenyls (PBB)	多溴二苯醚 Polybrominated diphenyl ethers (PBDE)
PCB	○	○	○	○	○	○
外殼	○	○	○	○	○	○

電源供應板	—	○	○	○	○	○
其他及其配件	—	○	○	○	○	○

備考 1.〝超出 0.1 wt %〞及〝超出 0.01 wt %〞係指限用物質之百分比含量超出百分比含量基準值

Note 1：“Exceeding 0.1 wt %” and “exceeding 0.01 wt %” indicate that the percentage content of the restricted substance exceeds the reference percentage value of presence condition.

備考 2.〝○〞係指該項限用物質之百分比含量未超出百分比含量基準值。

Note 2：“○” indicates that the percentage content of the restricted substance does not exceed the percentage of reference value of presence.

備考 3.〝—〞係指該項限用物質為排除項目。

Note 3：The “—” indicates that the restricted substance corresponds to the exemption.

Продукт сертифіковано згідно с правилами системи УкрСЕПРО на відповідність вимогам нормативних документів та вимогам, що передбачені чинними законодавчими актами України.

EAC

Safety Information

- Never touch the product with wet hands.
- Do not disassemble, repair or modify the product.
- Do not use the device where wireless devices are not allowed.
- Do not use the product if the casing has been broken. Danger of electric shock.
- Keep the device away from fire or hot environments. DO NOT immerse in water or any other liquid.
- Do not place near automatically controlled devices such as fire alarms. Radio waves emitted from this product may cause such devices to malfunction resulting in an accident.
- Observe restrictions on using wireless products in fuel depots, chemical plants or when blasting operations are in progress.
- Do not use liquid to clean the product. Only use a dry cloth.
- Never put metal objects inside the product. If a metal object enters the product turn off the circuit breaker and contact an authorised electrician.
- This product is not intended to be used when providing medical care. Consult the manufacturer of any personal medical devices, such as pacemakers or hearing aids to determine if they are adequality shielded from external RF (radio frequency) energy.
- Do not use this product in health care facilities. Hospitals or health care facilities may be using equipment that could be sensitive to external RF energy.
- Do not use this product near water for example near a bath tub, wash bowl, kitchen sink or laundry tub, in a wet basement or near a swimming pool.
- The product should be kept free from excessive smoke, dust or high temperature and vibration.
- This product should not be exposed to direct sunlight
- Do not place heavy objects on top of the product.
- This product may interfere with other electronic products such as TV, radios, personal computers, phones or other wireless devices.
- This equipment shall be installed at a height of fewer than 2 meters when sticking to a clean wall.
- Doorbell Operating Temperature: -20 °C ~ 45°C (-4°F ~ 113°F)
- Chime Operating Temperature: 0 °C ~ 40°C (32°F ~ 104°F)

Please read and follow the above safety information when operating the device. We cannot guarantee that no accidents or damage will occur due to improper use of the device. Please use this product with care and operate at your own risk.

Explanation of the symbols on the product label

Note: The product label is on the bottom of the product. Symbols may vary from products.

Symbol	Explanation
	Class II equipment
	Class II equipment with functional earthing
	Alternating current
	DC voltage
	Polarity of output terminals
	Indoor use only
	Dangerous voltage
	Caution, risk of electric shock
	Energy efficiency Marking
	Protective earth
	Earth
	Frame or chassis

Symbol	Explanation
	Functional earthing
	Caution, hot surface
	Caution
	Operator's manual
	Stand-by
	"ON"/"OFF" (push-push)
	Fuse
N	Fuse is used in neutral N
	RECYCLING This product bears the selective sorting symbol for Waste electrical and electronic equipment (WEEE). This means that this product must be handled pursuant to European directive 2012/19/EU in order to be recycled or dismantled to minimize its impact on the environment. User has the choice to give his product to a competent recycling organization or to the retailer when he buys a new electrical or electronic equipment.
	Caution, avoid listening at high volume levels for long periods
	Disconnection, all power plugs

Symbol	Explanation
m	Switch of mini-gap construction
μ	Switch of micro-gap construction (for US version) Switch of micro-gap / micro-disconnection construction (for other versions except US)
ε	Switch without contact gap (Semiconductor switching device)