User Guide

BE9300 Wi-Fi 7 Bluetooth PCIe Adapter
Archer TBE552E

© 2024 TP-Link REV1.0.0 1910013664

Contents

About This Guide 01

Chapter 1. Get to Know About Your Adapter 03

Chapter 2. Connect to a Computer 05

Chapter 3. Use Your Adapter 10

3. 1. Install Drivers.....11
3. 2. Join a Wireless Network.....12
3. 3. Pair with Bluetooth Devices.....12
3. 4. Uninstall Drivers.....13

Appendix: Troubleshooting 14

About This Guide

This guide is a complement to Quick Installation Guide. The Quick Installation Guide instructs you on quick installation, and this guide provides the product overview and more detailed instructions for each steps.

When using this guide, please notice that features available of the adapter may vary by model and software version. It may also vary by region or ISP. All images, steps, and descriptions in this guide are only examples and may not reflect your actual experience.

Conventions

In this guide, the following conventions are used:

Convention	Description
Underlined	Underlined words or phrases are hyperlinks. You can click to redirect to a website or a specific section.
Teal	Contents to be emphasized and texts on the web page are in teal, including the menus, items, buttons, etc.
Note:	Ignoring this type of note might result in a malfunction or damage to the device.
Tips:	Indicates important information that helps you make better use of your device.

Specifications are subject to change without notice. TP-Link is a registered trademark of TP-LINK CORPORATION PTE. LTD.

†Maximum wireless signal rates are the physical rates derived from IEEE Standard 802.11 specifications. Actual wireless data throughput and wireless coverage are not guaranteed and will vary as a result of network conditions, AP limitations, and environmental factors, including building materials, obstacles, volume and density of traffic, and AP location.

‡Use of Wi-Fi 7 (802.11be), Wi-Fi 6E (802.11ax), Wi-Fi 6 (802.11ax), and other features including 320 MHz Bandwidth, 4K-QAM, Multi-RUs, OFDMA, MU-MIMO, and BSS Color requires the AP and PC OS to also support the corresponding features.

§Certain features of Archer TBE552E, such as Bluetooth 5.4, may be restricted on some computing systems and platforms. Please try to update the device's driver for feature compatibility.

△The 320 MHz bandwidth is only available on the 6 GHz band. The 320 MHz bandwidth on the 6 GHz band and 160 MHz bandwidth on the 5 GHz band may be unavailable in some regions/countries due to regulatory restrictions. Double channel width and speed refer to 320 MHz compared to 160 MHz for Wi-Fi 6 adapters.

*Actual network speed may be limited by the rate of the product's PCI Express Interface, Ethernet WAN or LAN port, the rate supported by the network cable, internet service provider factors, operating system factors, and other environmental conditions.

**Use of WPA3 requires APs to also support the corresponding feature.

More Info

- The latest driver can be found at Download Center at https://www.tp-link.com/support.
- The Quick Installation Guide (QIG) can be found where you find this guide or inside the package of the product.
- Specifications can be found on the product page at https://www.tp-link.com.
- A TP-Link Community is provided for you to discuss our products at https://community.tp-link.com.

Chapter 1

Get to Know About Your Adapter

This chapter introduces the detail of the adapter.

Archer TBE552E

Wi-Fi 7 unlocks the full potential of the 6 GHz band, providing exceptional bandwidth and congestion-free channels exclusive to your desktop. Enhanced by 4K-QAM and 320 MHz, TBE552E delivers astonishing wireless speeds, facilitating instant multi-stream media playback.[‡]

Two powerful signal-boosting, high-performance antennas ensure stronger signal transmissions and reception to greatly extend existing Wi-Fi coverage, offering a fast, smooth online experience from farther away.

- Wireless Standards: 5760 Mbps on 6 GHz + 2880 Mbps on 5 GHz + 688 Mbps on 2.4 GHz, compatible with IEEE 802.11a/b/g/n/ac/ax/be standard.
- Antennas: 2× High-Performance Tri-Band Antennas
- Wireless Security: WPA/WPA2/WPA3, WPA-PSK/WPA2-PSK*
- Dimensions: 4.8x3.09x0.85 in (120.8*78.5*21.5 mm)
- System Requirements: Windows 11(64-bit) only[§]
- Environment:

  Operating Temperature: 0°C~40°C (32°F~104°F)

  Storage Temperature: -40°C~70°C (-40°F~158°F)

  Operating Humidity: 10%~90% non-condensing

  Storage Humidity: 5%~90% non-condensing

Chapter 2

Connect to a Computer

This chapter introduces how to connect the adapter to your computer.
Please note that images are for demonstration only.

1. Turn off your computer, unplug the power cable then remove the case panel.

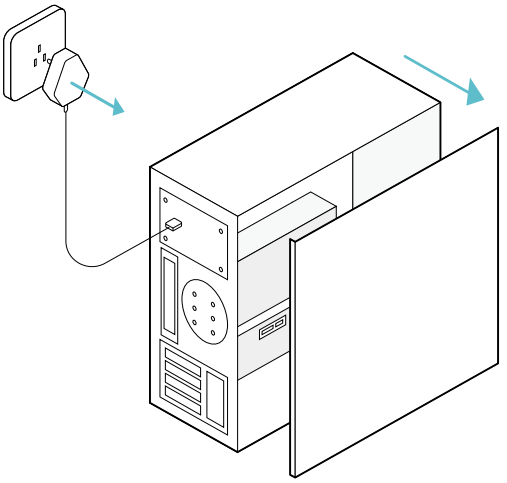

2. Connect the provided Bluetooth USB cable to the adapter.

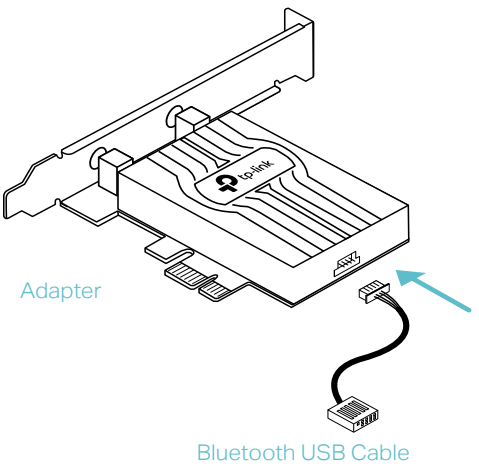

3. Locate an available **PCIE slot (X1, X4, X8, or X16)** and carefully insert the adapter.

Tip:

If the bracket is not suitable for your computer, detach it from the adapter's board and replace it with the low-profile bracket.

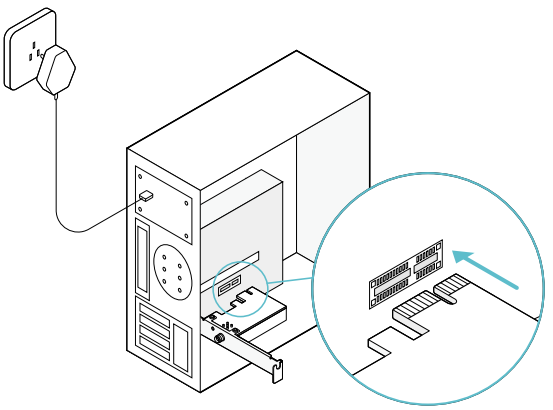

4. Locate an available **F_USB connector** and carefully plug the Bluetooth USB cable into it.

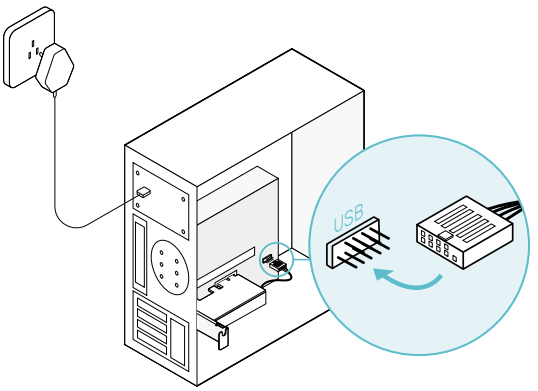

Note:
If the Bluetooth USB cable is not correctly connected to the motherboard, Bluetooth function won't work even after driver installation.

5. Install the antennas to the adapter.

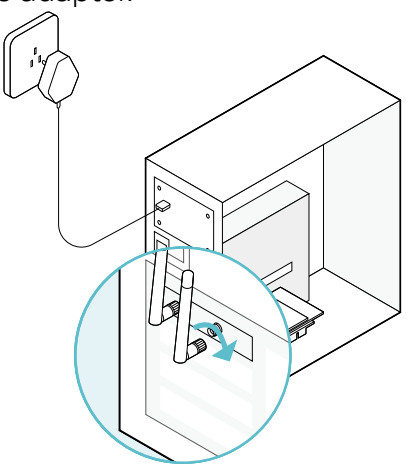

Tip:
- To maximize performance, make sure the path between the antenna and your router is clear.
- DO NOT connect one SMA male connector directly to another with wires or other con-ductors to prevent short circuits or adapter damage.

6. Replace the case panel, plug in the power cable and turn on your computer.

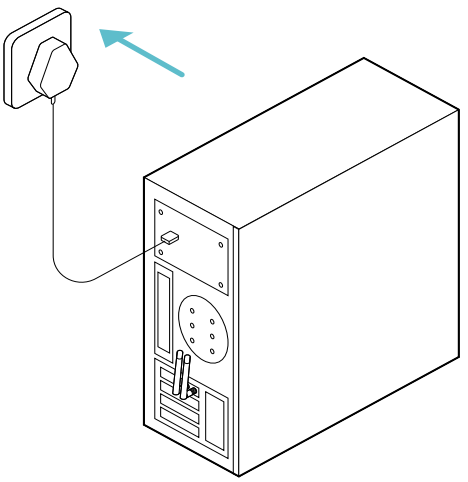

Chapter 3

Use Your Adapter

This chapter introduces how to install or uninstall your adapter's Wi-Fi and Bluetooth drivers, connect to a wireless network, and pair with a Bluetooth device on a Windows 11 (64-bit) system.

This chapter includes the following sections:

- 3.1 Install Drivers
- 3.2 Join a Wireless Network
- 3.3 Pair with Bluetooth Devices
- 3.4 Uninstall Drivers

3. 1. Install Drivers

Before You Start

1. Make sure you are using **Windows 11(64-bit)** or above, and your **Router** or **Access Point** supports the **Wi-Fi 7 standard**.

2. If you plan on using Bluetooth and already have connected Bluetooth devices, proceed with **Step 1**. Otherwise, skip to **Step 2**.

1. Disable Bluetooth

a. Right-click **My Computer**, select **Manage**, go to **Device Manager**.

b. Expand the **Bluetooth** node to find your existing Bluetooth device.

c. Right-click the existing Bluetooth device and select **Disable**.

Note: Make sure you have disabled all existing Bluetooth devices (both built-in and third party).

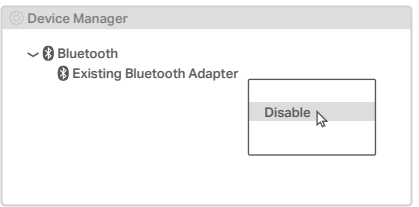

2. Insert the CD into your computer and go to **My Computer** or **This PC** to run the **Autorun.exe**.

Note: You can also check the new release and download the driver at https://www.tp-link.com/support/download/

3. Install the Wi-Fi and Bluetooth drivers.

Note: DO NOT install the Bluetooth and Wi-Fi drivers simultaneously. If one driver is being installed, please wait until it is finished, then install the other driver.

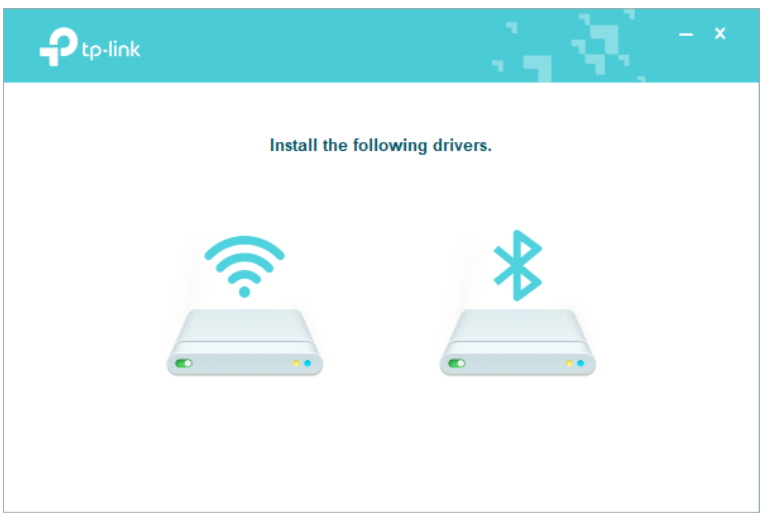

- **Wi-Fi:** Click and follow the on-screen instructions to complete the Wi-Fi installation.

- **Bluetooth:** Click and follow the on-screen instructions to complete the Bluetooth installation.

Note:

- To check if the drivers are installed successfully or not , refer to How to check if I have installed the drivers successfully or not?
- If an unknown publisher message pops up, select Yes to continue.
- If Windows User Account Control requires admin credentials, type user name and password of your Windows administrator account.

3. 2. Join a Wireless Network

1. Click the internet icon on the taskbar (the icon might look like one of these: , , , or).
2. Select your Wi-Fi network, click **Connect**, and enter the password when prompted.

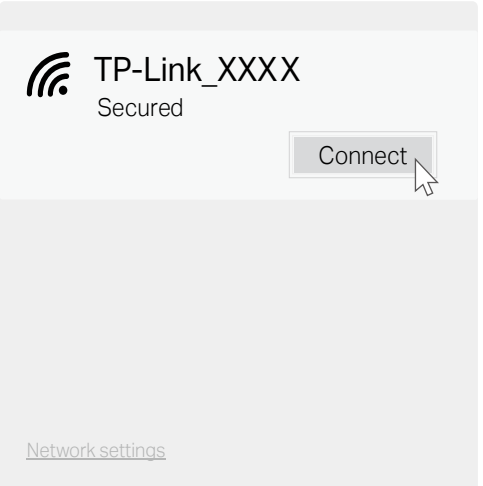

Note: To connect to a 6GHz, check the following:

1. Make sure the 6 GHz band is not prohibited by regulations in your country.
2. Make sure your router or access point supports 6 GHz Wi-Fi.
3. The 6 GHz band requires operating system support. Make sure you are using the Windows 11.
4. Make sure the Wi-Fi driver is successfully installed according to the Quick Installation Guide.

Note: If you want to update your operating system, refer to Troubleshooting-T6.

3. 3. Pair with Bluetooth Devices

1. Right-click the (Bluetooth) icon on the taskbar.

Note: If it's not displayed, refer to Troubleshooting-T4.

2. Select **Add a Bluetooth Device** to scan for available devices.
3. Select your Bluetooth device from the list and follow the on-screen instructions to complete pairing.

Note: Make sure your device's Bluetooth is enabled and discoverable.

3. 4. Uninstall Drivers

- **Uninstall Wi-Fi driver**

Go to **Start** > **Apps**, find the Wi-Fi driver **TP-Link Archer TBE552E 1.0 WiFi Driver**. Click on it and select **Uninstall**, then follow the on-screen instructions to complete the uninstallation.

- **Uninstall Bluetooth driver**

Go to **Start** > **Apps**, find the Bluetooth driver **TP-Link Archer TBE552E 1.0 Bluetooth Driver**. Click on it and select **Uninstall**, then follow the on-screen instructions to complete the uninstallation.

Appendix: Troubleshooting

T1. What should I do if the adapter is not detected?

- Make sure the adapter is securely located in the appropriate **PCI-E** slot.
- Try restarting the computer or try the adapter on a different computer.
- Make sure you meet the system requirements for the adapter.
- Make sure you use the latest driver for your specific adapter. The latest drivers can be found at the product's Support page at https://www.tp-link.com

T2. How to check if I have installed the drivers successfully or not?

Please follow these steps to check if you installed the driver for your TP-Link adapter successfully:

- Step 1. Right-click My Computer or This PC on your computer and select Manage. Or click the Windows Button and type 'Device Manager' in the search bar (usually on the bottom-left corner of the Desktop), and click Device Manager.
- Step 2. Locate Network Adapters or Bluetooth and find the relevant TP-Link adapters.
- Step 3. Right-click the adapter and select Properties. If you see 'This device is working properly' in the Device Status box, then you have already installed the driver successfully.

T3. What should I do if can't connect to the Wi-Fi after installing the driver?

- Refer to T2 to check if you have installed the driver for your adapter successfully .
- Restart your computer and try again.
- Disable the antivirus software and firewall, then try again.
- Try a different PCI-E slot on the computer.
- Reinstall the driver and try again.

T4. What should I do if the Bluetooth icon doesn't appear?

- Make sure you have turned on the Bluetooth in your Windows settings. To enable Bluetooth, go to Start > Settings > Devices > Bluetooth & other devices and turn on Bluetooth.
- Make sure there are no other Bluetooth devices on the computer. If there are, disable all existing Bluetooth devices in Device Manager, then reinstall the adapter and try again.

Tip: To go to **Device Manager**: Right-click **My Computer** or **This PC**, select **Manage**, go to **Device Manager** and disable all existing Bluetooth devices.

T5. How to find the hardware version of the adapter?

- The hardware version printed on the product label on the package or the adapter. There is a character string "Ver:X.Y" (for example, Ver:1.0) in the Serial Number field, and the number X is the hardware version of the adapter.

T6. How do I update my operating system?

- Refer to the official website to download Win 11:

  https://www.microsoft.com/software-download/windows11/

For more detailed instructions:

- Can't find or connect to the wireless networks: https://www.tp-link.com/faq-2253.html
- Can't install the driver: https://www.tp-link.com/faq-2252.html

FCC STATEMENT

Product Name: BE9300 Wi-Fi 7 Bluetooth PCIe Adapter

Model Number: Archer TBE552E

Responsible party:

TP-Link USA Corporation

Address: 10 Mauchly, Irvine, CA 92618

Website: http://www.tp-link.com/us/

Tel: +1 626 333 0234

Fax: +1 909 527 6804

E-mail: sales.usa@tp-link.com

This equipment has been tested and found to comply with the limits for a Class B digital device, pursuant to part 15 of the FCC Rules. These limits are designed to provide reasonable protection against harmful interference in a residential installation. This equipment generates, uses and can radiate radio frequency energy and, if not installed and used in accordance with the instructions, may cause harmful interference to radio communications. However, there is no guarantee that interference will not occur in a particular installation. If this equipment does cause harmful interference to radio or television reception, which can be determined by turning the equipment off and on, the user is encouraged to try to correct the interference by one or more of the following measures:

- Reorient or relocate the receiving antenna.
- Increase the separation between the equipment and receiver.
- Connect the equipment into an outlet on a circuit different from that to which the receiver is connected.
- Consult the dealer or an experienced radio/ TV technician for help.

This device complies with part 15 of the FCC Rules. Operation is subject to the following two conditions:

1) This device may not cause harmful interference.

2) This device must accept any interference received, including interference that may cause undesired operation.

Any changes or modifications not expressly approved by the party responsible for compliance could void the user's authority to operate the equipment.

Note: The manufacturer is not responsible for any radio or TV interference caused by unauthorized modifications to this equipment. Such modifications could void the user's authority to operate the equipment.

FCC RF Radiation Exposure Statement:

This equipment complies with FCC RF radiation exposure limits set forth for an uncontrolled environment. This device and its antenna must not be co-located or operating in conjunction with any other antenna or transmitter.

"To comply with FCC RF exposure compliance requirements, this grant is applicable to only Mobile Configurations. The antennas used for this transmitter must be installed to provide a separation distance of at least 20 cm from all persons and must not be co-located or operating in conjunction with any other antenna or transmitter."

Operation of transmitters in the 5.925-7.125 GHz band is prohibited for control of or communications with unmanned aircraft systems.

We, **TP-Link USA Corporation**, has determined that the equipment shown as above has been shown to comply with the applicable technical standards, FCC part 15. There is no unauthorized change is made in the equipment and the equipment is properly maintained and operated.

Issue Date: 24/05/31

CE Mark Warning

This is a class B product. In a domestic environment, this product may cause radio interference, in which case the user may be required to take adequate measures.

OPERATING FREQUENCY(the maximum transmitted power)

2400MHz-2483.5MHz (24dBm)

5150MHz-5250MHz (24dBm)

5250MHz-5350MHz (24dBm)

5470MHz-5725MHz (24dBm)

5745MHz-5825MHz (24dBm)

5945MHz-6425MHz (20dBm)

EU declaration of conformity

TP-Link hereby declares that the device is in compliance with the essential requirements and other relevant provisions of directives 2014/53/EU, 2011 /65/EU and (EU) 2015/863.

The original EU declaration of conformity may be found at https://www.tp-link.com/en/support/ce/

UK declaration of conformity

TP-Link hereby declares that the device is in compliance with the essential requirements and other relevant provisions of the Radio Equipment Regulations 2017.

The original UK declaration of conformity may be found at https://www.tp-link.com/support/ukca/

RF Exposure Information

This device meets the EU requirements (2014/53/EU Article 3.1a) on the limitation of exposure of the general public to electromagnetic fields by way of health protection.

The device complies with RF specifications when the device used at 20 cm from your body.

Frequency band: 5150 - 5250 MHz:

Indoor use: Inside buildings only. Installations and use inside road vehicles and train carriages are not permitted. Limited outdoor use: If used outdoors, equipment shall not be attached to a fixed installation or to the external body of road vehicles, a fixed infrastructure or a fixed outdoor antenna. Use by unmanned aircraft systems (UAS) is limited to within the 5170 - 5250 MHz band.

Frequency band: 5250 - 5350 MHz:

Indoor use: Inside buildings only. Installations and use in road vehicles, trains and aircraft are not permitted. Outdoor use is not permitted.

Frequency band: 5470 - 5725 MHz:

Installations and use in road vehicles, trains and aircraft and use for unmanned aircraft systems (UAS) are not permitted.

Frequency band: 5945 - 6425 MHz:

Restricted to indoor use, including in trains with metal-coated windows and aircraft. Outdoor use, including in road vehicles, is not permitted.

	AT	BE	BG	CH	CY	CZ	DE	DK
	EE	EL	ES	FI	FR	HR	HU	IE
	IS	IT	LI	LT	LU	LV	MT	NL
	NO	PL	PT	RO	SE	SI	SK	UK(NI)

	UK

Attention: This device may only be used indoors in Great Britain.

Canadian Compliance Statement

This device contains licence-exempt transmitter(s)/receiver(s) that comply with Innovation, Science and Economic Development Canada's licence-exempt RSS(s). Operation is subject to the following two conditions:

(1) This device may not cause interference.

(2) This device must accept any interference, including interference that may cause undesired operation of the device.

L'émetteur/récepteur exempt de licence contenu dans le présent appareil est conforme aux CNR d'Innovation, Sciences et Développement économique

Canada applicables aux appareils radio exempts de licence. L'exploitation est autorisée aux deux conditions suivantes :

1) L'appareil ne doit pas produire de brouillage;

2) L'appareil doit accepter tout brouillage radioélectrique subi, même si le brouillage est susceptible d'en compromettre le fonctionnement.

This radio transmitter (IC: 31152-TBE552E/ Model: Archer TBE552E) has been approved by Industry Canada to operate with the antenna types listed below with the maximum permissible gain indicated. Antenna types not included in this list below, having a gain greater than the maximum gain indicated for that type, are strictly prohibited for use with this device.

Le présent émetteur radio (IC: 31152-TBE552E/ Model: Archer TBE552E) a été approuvé par Industrie Canada pour fonctionner avec les types d'antenne énumérés ci-dessous et ayant un gain admissible maximal. Les types d'antenne non inclus dans cette liste ci-dessous et dont le gain est supérieur au gain maximal indiqué, sont strictement interdits pour l'exploitation de l'émetteur.

Antenna	2× High-Performance Tri-Band Antennas

Caution:

1) The device for operation in the band 5150–5250 MHz is only for indoor use to reduce the potential for harmful interference to co-channel mobile satellite systems;

2) For devices with detachable antenna(s), the maximum antenna gain permitted for devices in the bands 5250-5350 MHz and 5470-5725 MHz shall be such that the equipment still complies with the e.i.r.p. limit;

3) For devices with detachable antenna(s), the maximum antenna gain permitted for devices in the band 5725-5850 MHz shall be such that the equipment still complies with the e.i.r.p. limits specified for point-to-point and non-point-to-point operation as appropriate; and

DFS (Dynamic Frequency Selection) products that operate in the bands 5250-5350 MHz, 5470-5600MHz, and 5650-5725MHz.

Avertissement:

1) Le dispositif fonctionnant dans la bande 5150-5250 MHz est réservé uniquement pour une utilisation à l'intérieur afin de réduire les risques de brouillage préjudiciable aux systèmes de satellites mobiles utilisant les mêmes canaux;

2) Le gain maximal d'antenne permis pour les dispositifs avec antenne(s) amovible(s) utilisant les bandes 5250-5350 MHz et 5470-5725 MHz doit se conformer à la limitation P.I.R.E.;

3) Le gain maximal d'antenne permis pour les dispositifs avec antenne(s) amovible(s) utilisant la bande 5725-5850 MHz doit se conformer à la limitation P.I.R.E spécifiée pour l'exploitation point à point et non point à point, selon le cas.

Les produits utilisant la technique d'atténuation DFS (sélection dynamique des fréquences) sur les bandes 5250- 5350 MHz, 5470-5600MHz et 5650-5725MHz.

Radiation Exposure Statement:

This equipment complies with IC radiation exposure limits set forth for an uncontrolled environment. This equipment should be installed and operated with minimum distance 20cm between the radiator & your body.

Déclaration d'exposition aux radiations:

Cet équipement est conforme aux limites d'exposition aux rayonnements IC établies pour un environnement non contrôlé. Cet équipement doit être installé et utilisé avec un minimum de 20 cm de distance entre la source de rayonnement et votre corps.

Devices shall not be used for control of or communications with unmanned aircraft systems.

Les appareils ne doivent pas être utilisés pour le contrôle ou la communication avec des systèmes d'aéronefs sans pilote.

Industry Canada Statement

CAN ICES-3 (B)/NMB-3(B)

Korea Warning Statements

당해 무선설비는 운용중 전파혼신 가능성이 있음.

NCC Notice

注意！

取得審驗證明之低功率射頻器材，非經核准，公司、商號或使用者均不得擅自變更頻率、加大功率或變更原設計之特性及功能。

低功率射頻器材之使用不得影響飛航安全及干擾合法通信；經發現有干擾現象時，應立即停用，並改善至無干擾時方得繼續使用。

前述合法通信，指依電信管理法規定作業之無線電通信。

低功率射頻器材須忍受合法通信或工業、科學及醫療用電波輻射性電機設備之干擾。

應避免影響附近雷達系統之操作。

高增益指向性天線只得應用於固定式點對點系統。

BSMI Notice

安全諮詢及注意事項

- 請使用原裝電源供應器或只能按照本產品注明的電源類型使用本產品。
- 清潔本產品之前請先拔掉電源線。請勿使用液體、噴霧清潔劑或濕布進行清潔。
- 注意防潮，請勿將水或其他液體潑灑到本產品上。
- 插槽與開口供通風使用，以確保本產品的操作可靠並防止過熱，請勿堵塞或覆蓋開口。
- 請勿將本產品置放於靠近熱源的地方。除非有正常的通風，否則不可放在密閉位置中。
- 請不要私自打開機殼，不要嘗試自行維修本產品，請由授權的專業人士進行此項工作。

限用物質含有情況標示聲明書

Equipment name 設備名稱：BE9300 Wi-Fi 7 Bluetooth PCIe Adapter				型號（型式）：Archer TBE552E		
單元 Unit	限用物質及其化學符號 Restricted substances and its chemical symbols					
	鉛 Lead (Pb)	汞 Mercury (Hg)	鎘 Cadmium (Cd)	六價鉻 Hexavalent chromium (Cr^{+6})	多溴聯苯 Polybrominated biphenyls (PBB)	多溴二苯醚 Polybrominated diphenyl ethers (PBDE)
PCB	○	○	○	○	○	○
天線	○	○	○	○	○	○
五金組件	—	○	○	○	○	○
其他及其配件	—	○	○	○	○	○

備考 1.〝超出 0.1 wt %〞及〝超出 0.01 wt %〞係指限用物質之百分比含量超出百分比含量基準值
Note 1: "Exceeding 0.1 wt %" and "exceeding 0.01 wt %" indicate that the percentage content of the restricted substance exceeds the reference percentage value of presence condition.
備考 2.〝○〞係指該項限用物質之百分比含量未超出百分比含量基準值。
Note 2: "○" indicates that the percentage content of the restricted substance does not exceed the percentage of reference value of presence.
備考 3.〝—〞係指該項限用物質為排除項目。
Note 3: The "–" indicates that the restricted substance corresponds to the exemption.

Продукт сертифіковано згідно с правилами системи УкрСЕПРО на відповідність вимогам нормативних документів та вимогам, що передбачені чинними законодавчими актами України.

Safety Information

- Keep the device away from water, fire, humidity or hot environments.
- Do not attempt to disassemble, repair, or modify the device. If you need service, please contact us.
- Do not use the device where wireless devices are not allowed.
- This equipment can be powered only by equipments that comply with Power Source Class 2 (PS2) or Limited Power Source (LPS) defined in the standard of IEC 62368-1.

Please read and follow the above safety information when operating the device. We cannot guarantee that no accidents or damage will occur due to improper use of the device. Please use this product with care and operate at your own risk.

This product uses radios and other components that emit electromagnetic fields. Electromagnetic fields and magnets may interfere with pacemakers and other implanted medical devices. Always keep the product and its power adapter more than 15 cm (6 inches) away from any pacemakers or other implanted medical devices. If you suspect your product is interfering with your pacemaker or any other implanted medical device, turn off your product and consult your physician for information specific to your medical device.

Environment

Operating Temperature: 0℃~40℃ (32℉~104℉)

Explanation of the symbols on the product label

Symbols may vary from products.

Symbol	Explanation
	Class II equipment
	Class II equipment with functional earthing

	Alternating current
	Direct current
	Polarity of d.c. power connector
	Indoor use only
	Dangerous voltage
	Caution, risk of electric shock
VI	Energy efficiency Marking
	Protective earth
	Earth
	Frame or chassis
	Functional earthing
	Caution, hot surface
	Caution
	Operator's manual
	Stand-by
	"ON"/"OFF" (push-push)
	Fuse
N	Fuse is used in neutral N

	RECYCLING This product bears the selective sorting symbol for Waste electrical and electronic equipment (WEEE). This means that this product must be handled pursuant to European directive 2012/19/EU in order to be recycled or dismantled to minimize its impact on the environment. User has the choice to give his product to a competent recycling organization or to the retailer when he buys a new electrical or electronic equipment.
	Caution, avoid listening at high volume levels for long periods
	Disconnection, all power plugs
m	Switch of mini-gap construction
μ	Switch of micro-gap construction (for US version) Switch of micro-gap / micro-disconnection construction (for other versions except US)
ε	Switch without contact gap (Semiconductor switching device)