2023

Patch antenna matching debugging report

- Customer name: Shenzhen Lianhongxin industry,
- antenna type: CA-C01 patch antenna,
- debugging method: matching device debugging,
- testing time: 202306.01
- testing equipment: vector Network analyzer,
- microwave anechoic chamber

陈鹏飞 18028016875
广州寒武纪电子科技有限公司
2023/6/1

二 2.4G （CA-C01）

Position 2

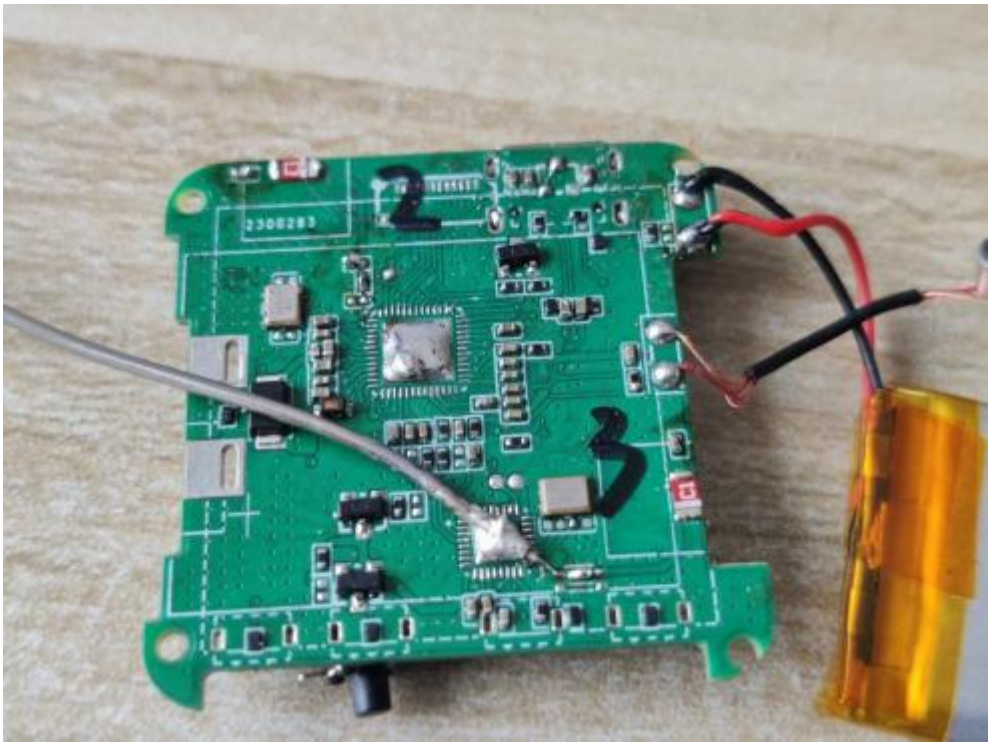

1 Built-in antenna test environment

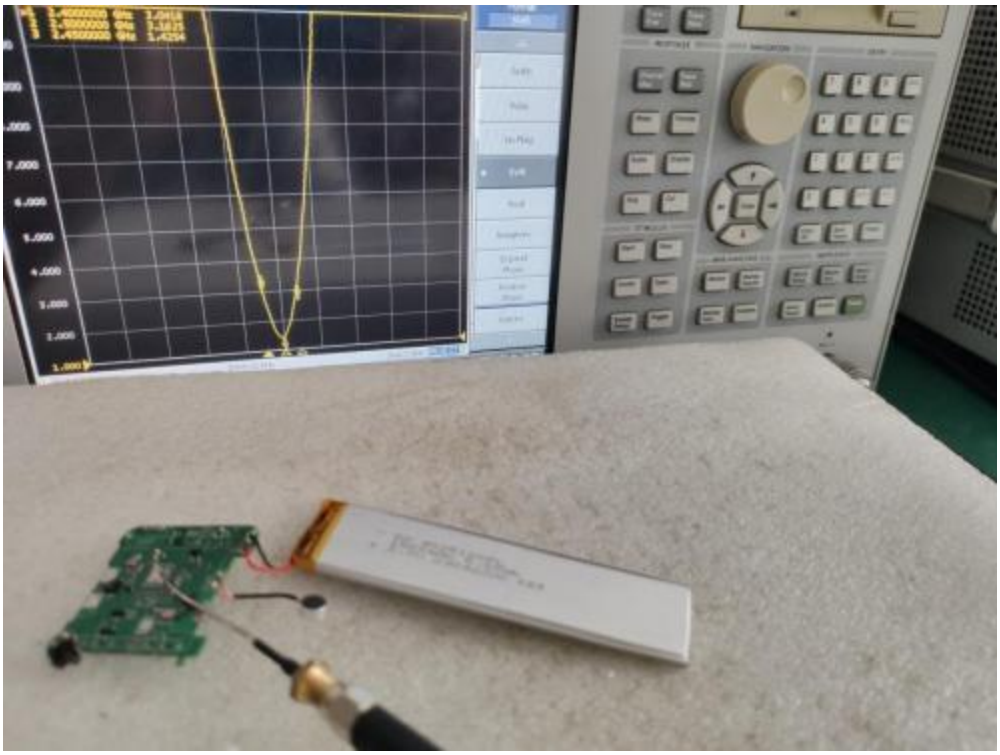

2 The matching network of the antennas is asfollows

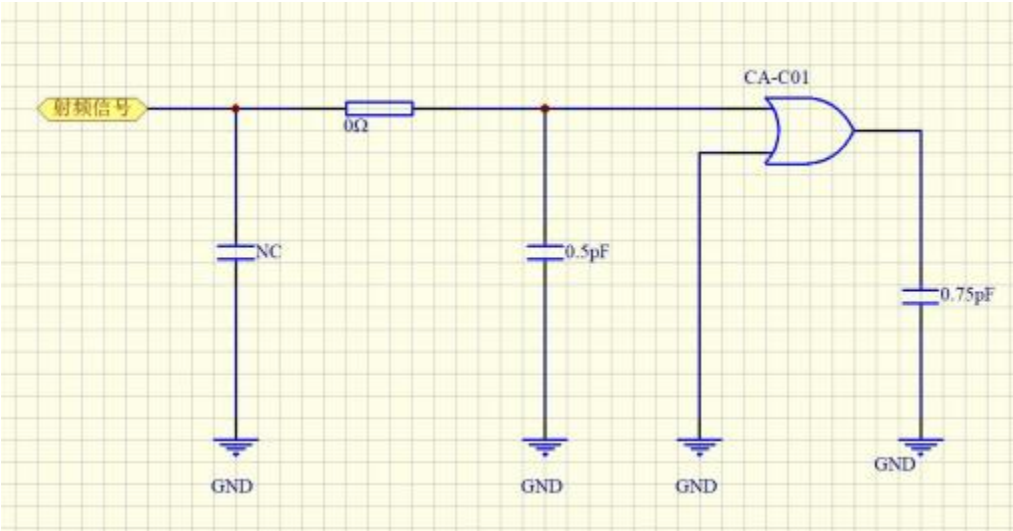

Note: The value of peripheral devices required by the RF chip reference design should be used according to the chip manufacturer's reference design. The above antenna matching devices shall not be replaced by each other

3 The measured results
antenna standing wave ratio

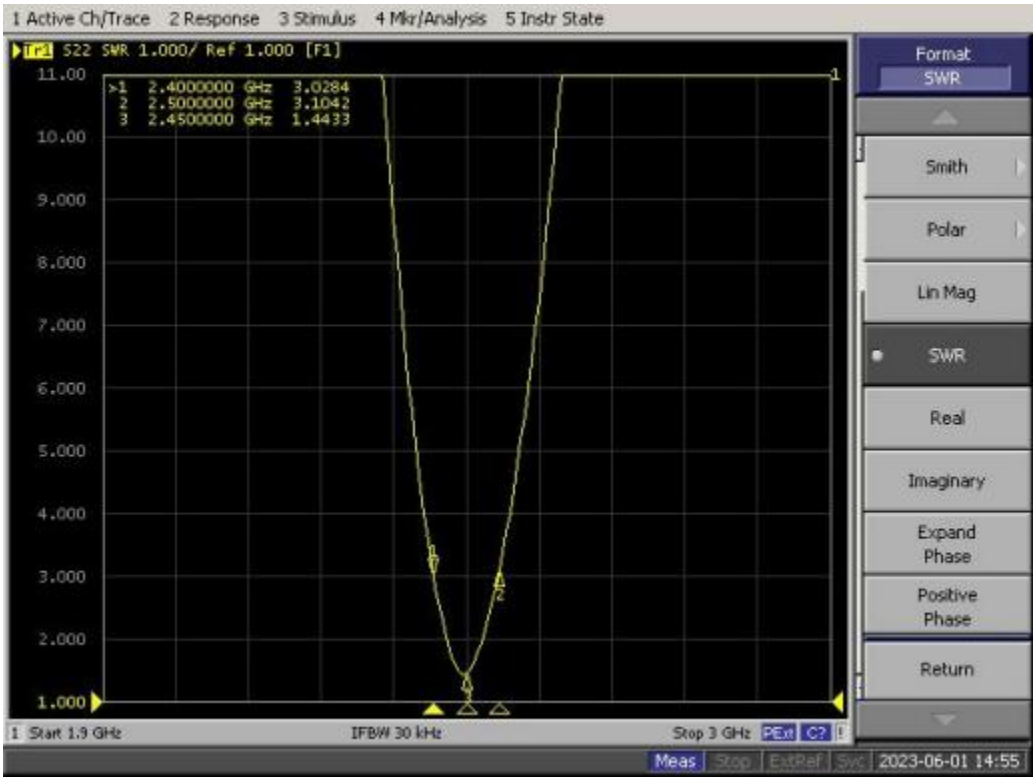

return loss

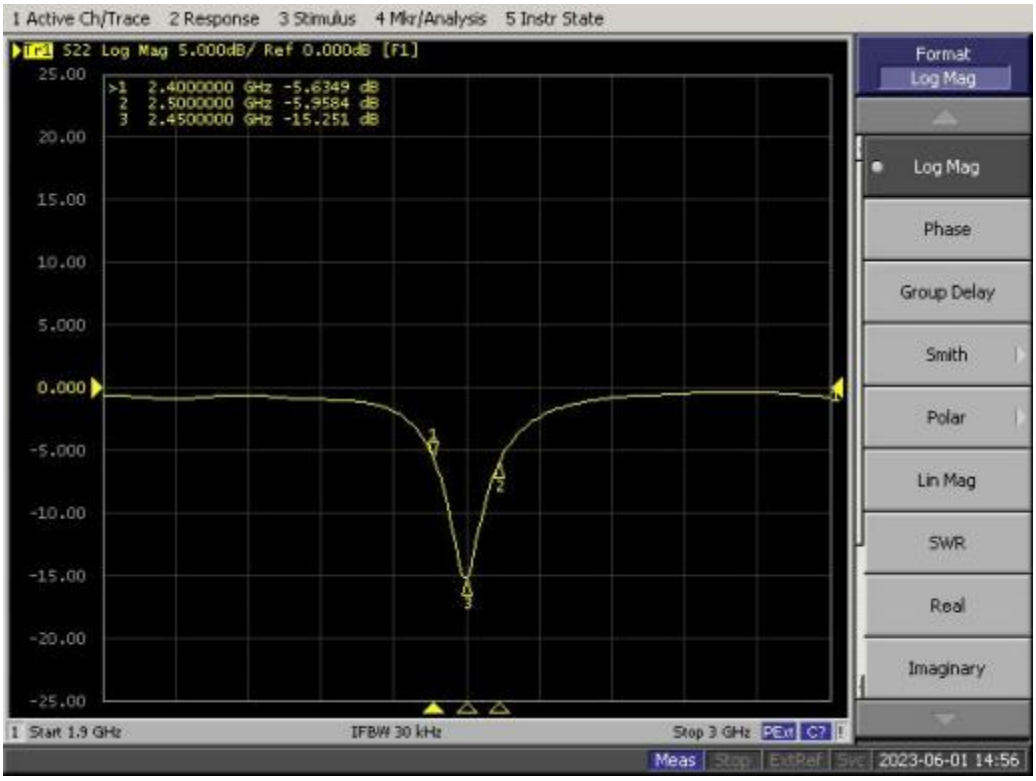

Efficiency and gain

frequency (MHz)	gain (dBi)	efficiency (%)

2400	0.86	42.1
2410	1.41	45.91
2420	1.63	46.84
2430	1.9	48.64
2440	2.1	50.28
2450	1.93	48.36
2460	1.75	46.75
2470	1.54	44.66
2480	1.62	44.22
2490	1.53	41.61
2500	1.3	38.82

directional diagram; directivity diagram

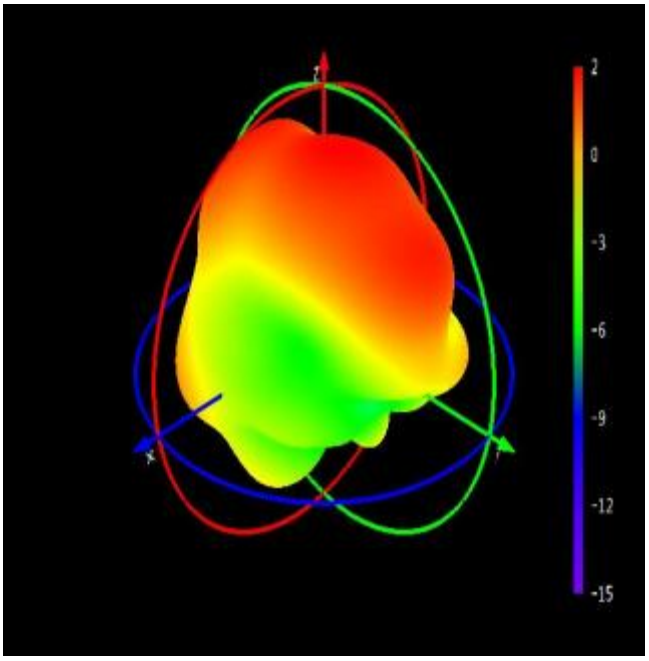

4 conclusion

After the debugging of the impedance matching device, all the indexes of the built-in patch antenna of this product meet the design requirements of the built-in antenna。

三 2.4G （CA-C01）
Position 3

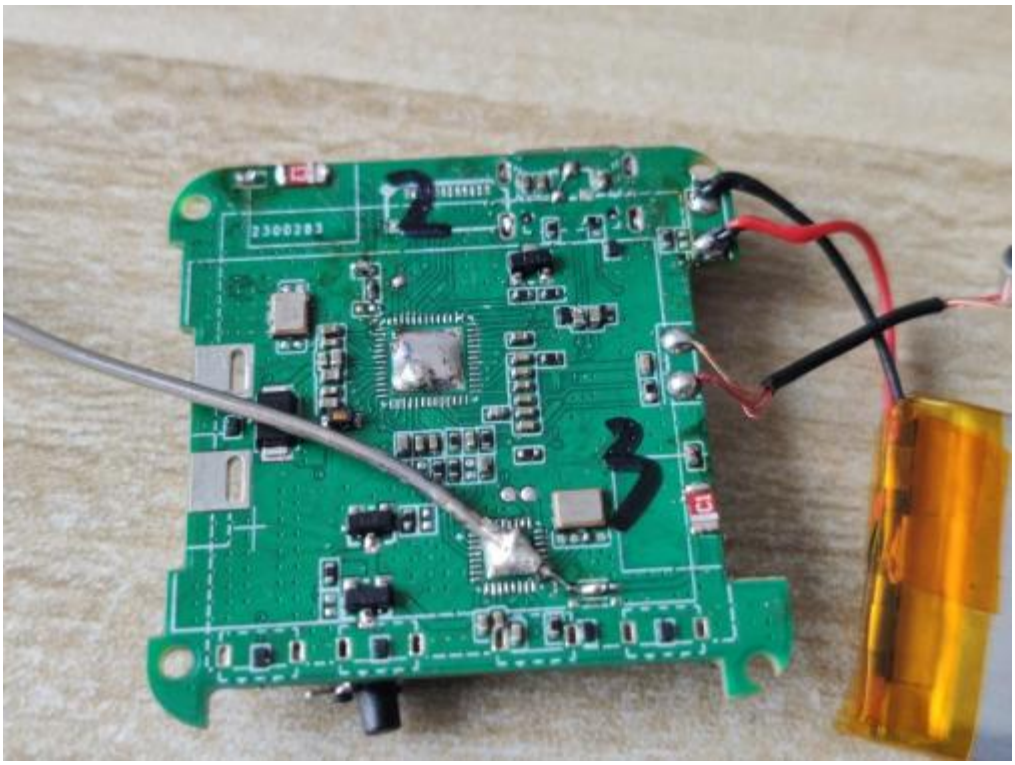

1 Built-in antenna test environment

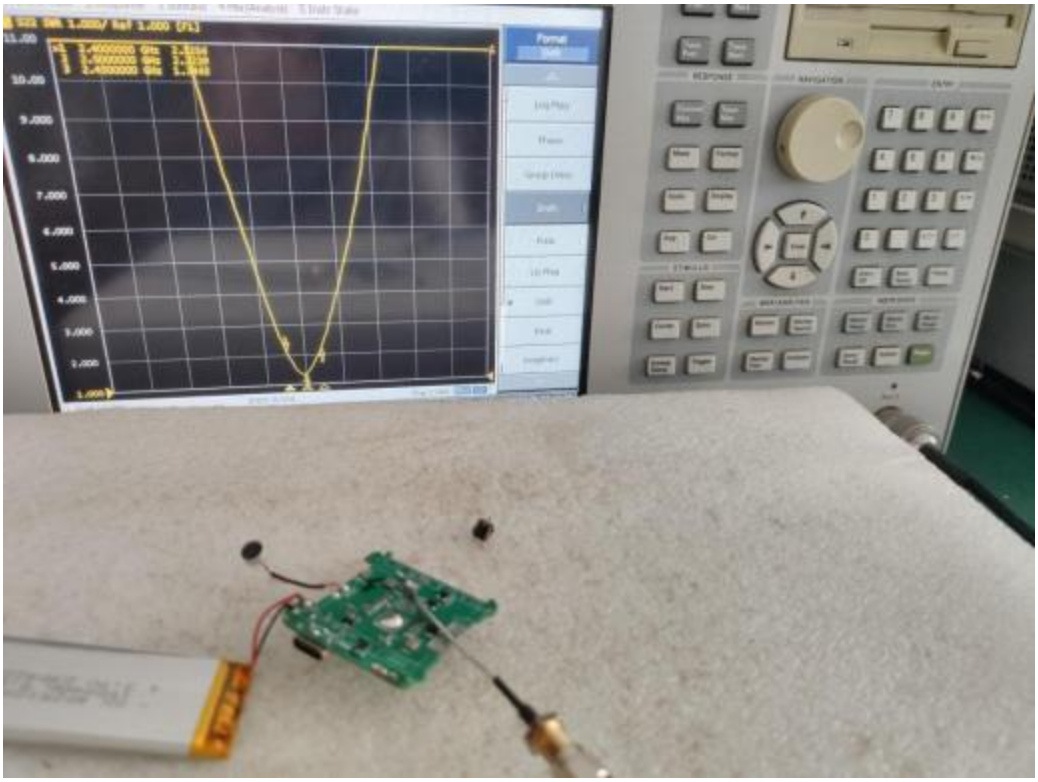

2 The matching network of the antennas is as follows

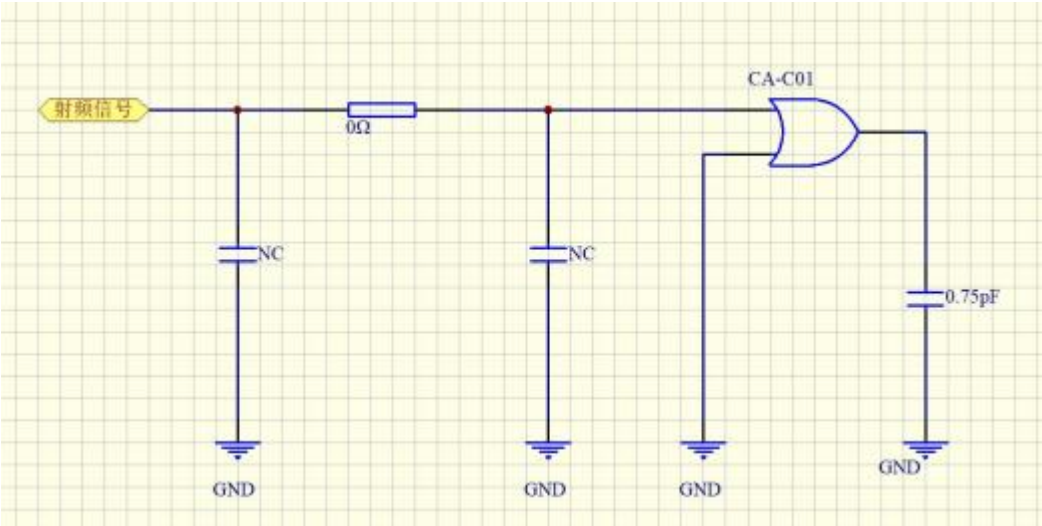

Note: The value of peripheral devices required by the RF chip reference design should be used according to the chip manufacturer's reference design. The above antenna matching devices shall not be replaced by each other

3 The measured results

antenna standing wave ratio

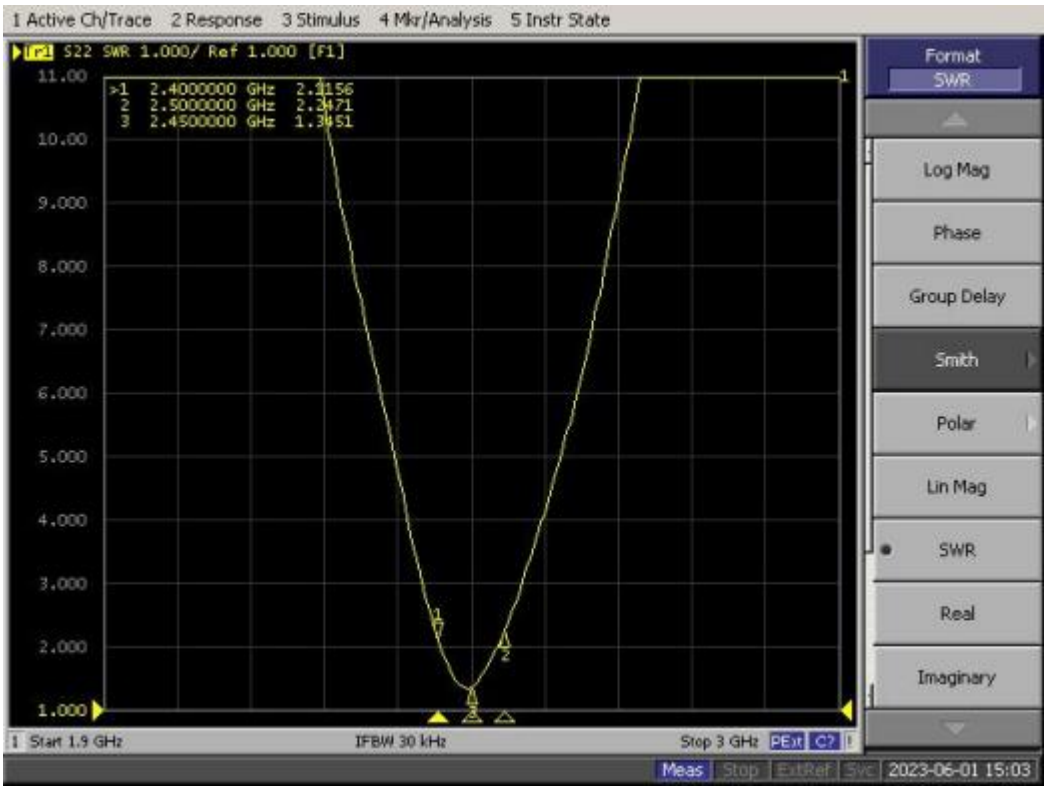

return loss

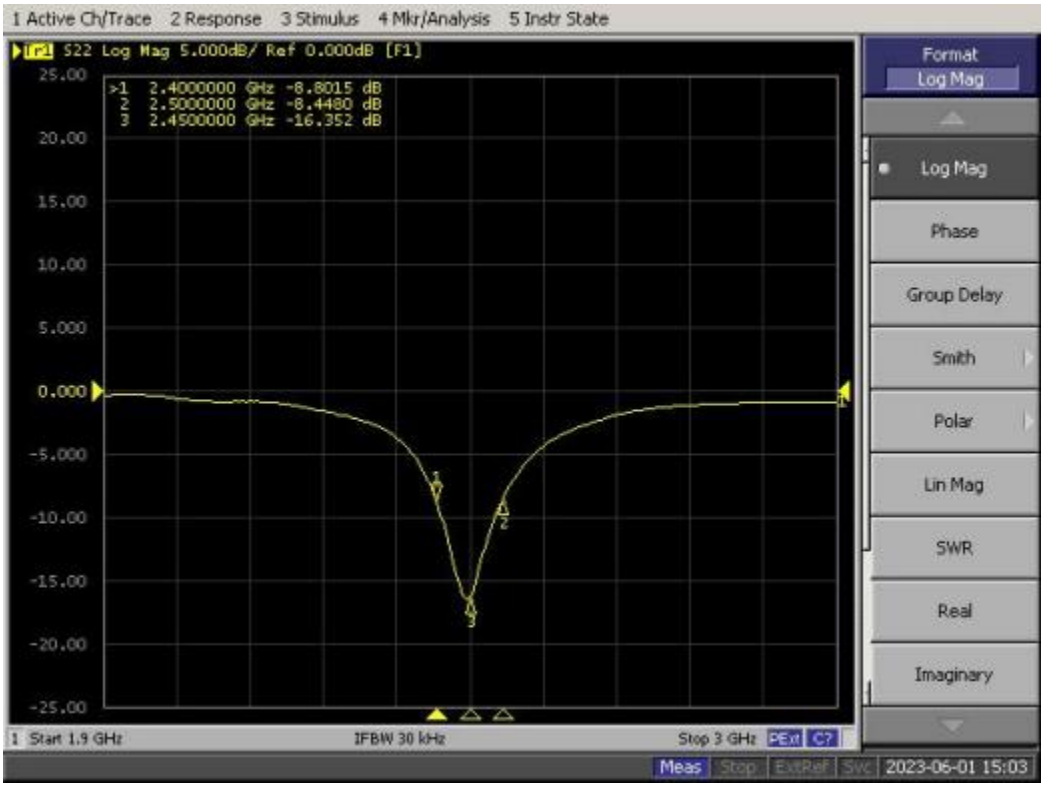

Efficiency and gain

frequency 频率(MHz)	gain 增益(dBi)	efficiency 效率(%)
2400	1.82	53.09
2410	1.9	53.64
2420	2.02	54.84
2430	2.14	55.28
2440	2	53.74
2450	1.9	53.36
2460	1.84	52.16
2470	1.77	51.75
2480	1.73	51.92
2490	1.54	49.66
2500	1.63	51.84

directional diagram

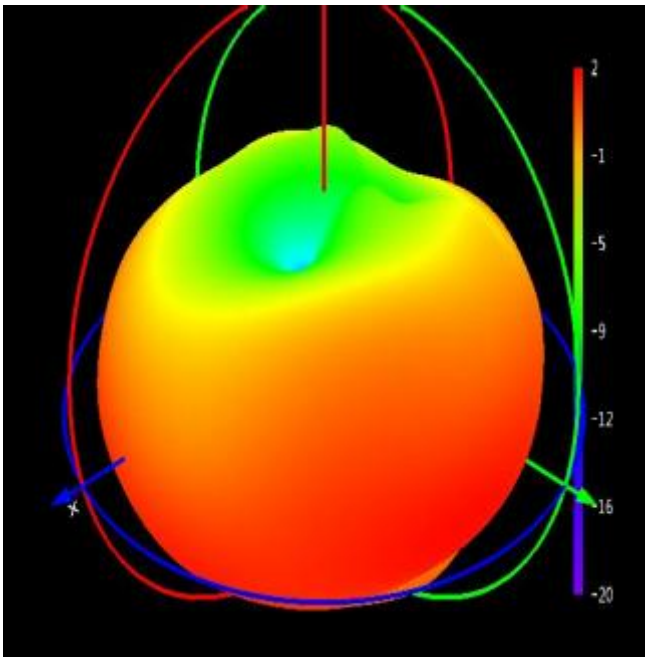

4 conclusion

After the debugging of the impedance matching device, all the indexes of the built-in patch antenna of this product meet the design requirements of the built-in antenna

Guangzhou Cambrian Electronic Technology Co., LTD