# OPERATION MANUAL

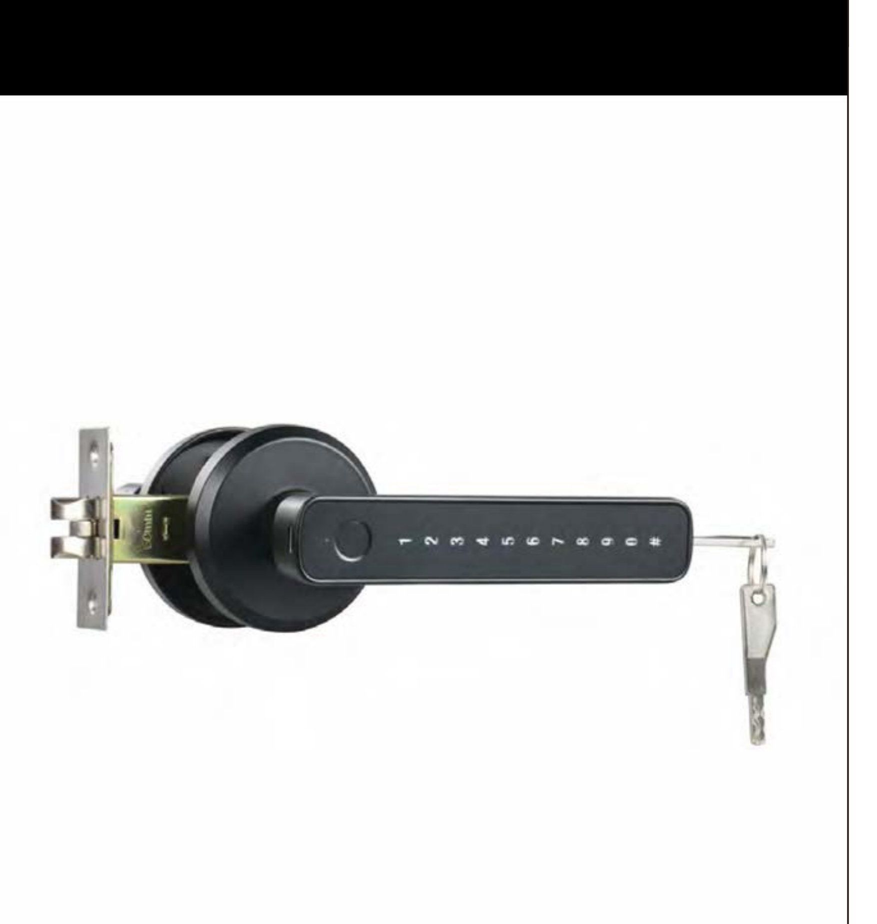

## 1.Parameters

Cover: D70mm / Lever: L150mm / Height:62mm

Material:
Aluminum alloy+Acrylic

Available Thickness:
35mm ~ 55mm

Unlock Way:
Key/Fingerprint/password/Tuya APP

Power Supply:
4 x AAA Alkaline Batterys

Emergency Supply:
USB(Type-C Interface)

Working Voltage: 6V
Alarm Voltage :4.8V

Capacity:
Fingerprint——50sets
Password——100sets

## 2.Parts list

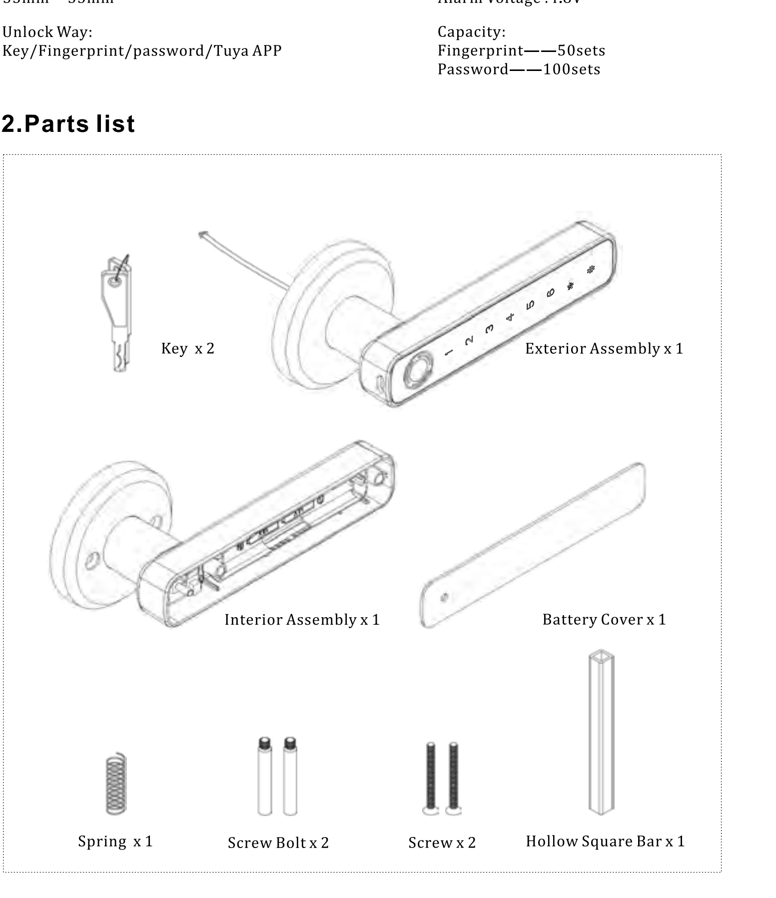


## 3.Overall

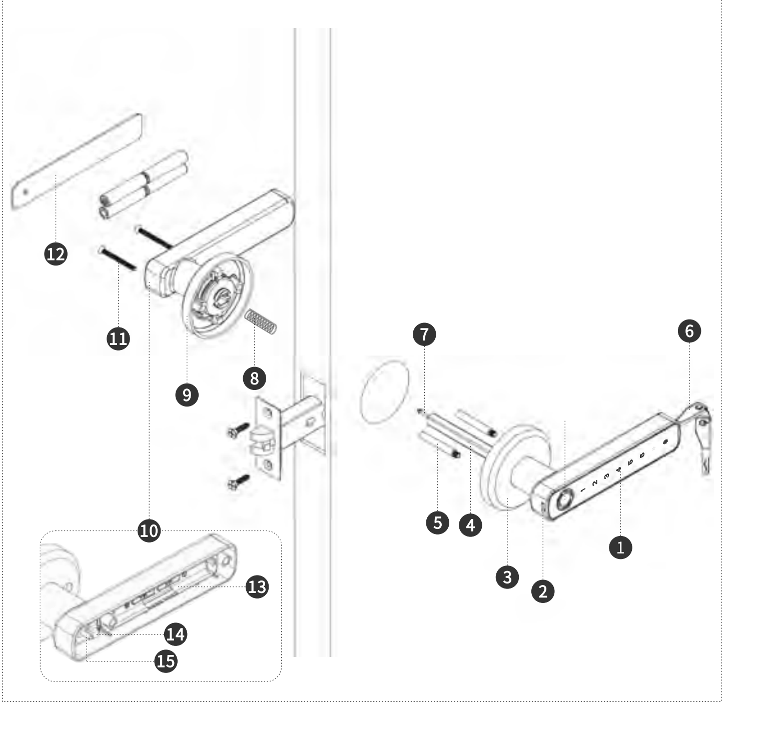

| | | |
|---|---|---|
| 1.Front Handle | 6.Key | 11.Screw |
| 2.Emergency power supply | 7.Data Line | 12.Battery Cover |
| 3.Front Cover | 8.Spring | 13.Battery Box |
| 4.Hollow Square Bar | 9.Back Cover | 14.Data Line Interface |
| 5.Screw Bolt | 10.Back Handle | 15.Setting Button |

## 4.Installation

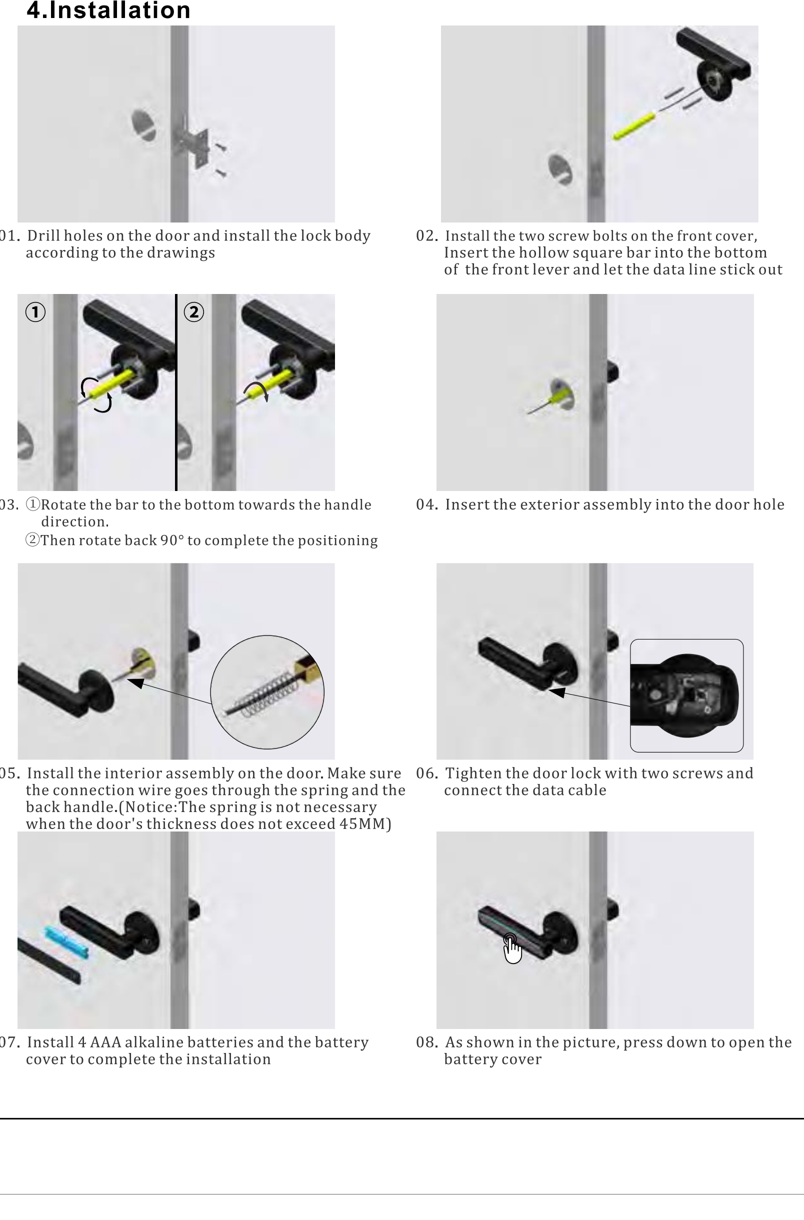

01. Drill holes on the door and install the lock body according to the drawings

02. Install the two screw bolts on the front cover, Insert the hollow square bar into the bottom of the front lever and let the data line stick out

03. ①Rotate the bar to the bottom towards the handle direction.
②Then rotate back 90° to complete the positioning

04. Insert the exterior assembly into the door hole

05. Install the interior assembly on the door. Make sure the connection wire goes through the spring and the back handle.(Notice:The spring is not necessary when the door's thickness does not exceed 45MM)

06. Tighten the door lock with two screws and connect the data cable

07. Install 4 AAA alkaline batteries and the battery cover to complete the installation

08. As shown in the picture, press down to open the battery cover

## Lock function setting

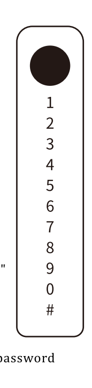


### 1. Function and operation

1) Administrator information: refers to the fingerprint and password of the administrator.
2) Unlock information: refers to the entered fingerprints and passwords (including administrators and ordinary users)
3) The "#" key has two modes:
A. It is the confirmation key or the function key for entering the menu;
B. The clear key/back key (click to clear when entering the password).
4) The operating system will automatically exit if there is no operation for more than 20 seconds.
5) After the voltage is lower than 4.8V, it will prompt "low battery, please replace the battery" every time you unlock, please replace the battery in time.
6) In Always unlock mode, click the setting button, and the voice broadcasts "Always unlock mode,please lock soon." and "Always unlock mode cancel".

### 2. Factory default state

1) The factory administrator's initial password is "123456". In the initial state, any fingerprint can unlock the lock.
2) After entering the administrator information, the lock cannot be unlocked without entering the fingerprint and password

### 3. Door lock function management

Factory default state → Press "1" + "#" → "Please verify administrator" Enter "123456#" → After the operation is successful, the voice broadcast:
To add administrator,press 1
To add user,press 2
To delete user,press 3
To switch voice mode,press 4
To switch language,press 5
To restore factory settings 6

### 4.Menu list

| | | |
|---|---|---|
| 1 Add administrator | Password enroll 6-10 digits 2 times Or Fingerprint enroll 5 times | "Enroll success" Continue to add Or Press "#" to return |
| 2 Add user | Password enroll 6-10 digits 2 times Or Fingerprint enroll 5 times | "Enroll success" Continue to add Or Press "#" to return |
| 3 Delete user | Enter unwanted ID or passwords or fingerprints | "Delete success" Continue to delete Or Press "#" to return |
| 4 Switch voice mode | "Silent mode" Or "Silent mode Cancel" | |
| 5 Switch language | Chinese / English | |
| 6 Restore factory settings | Press "#" confirm | |

## APP settings:

Reminder: The product is a Tuya Bluetooth lock, the administrator of the APP is the ultimate administrator of the lock, and the operation function of the lock end is an auxiliary operation, please be sure to download the Smart Life APP to bind the administrator, unless it can be ensured that the lock will not be used by unrelated people APP is bundled.

**1. Download and install the "Smart Life" APP from the application market.**
Remarks: Users can also download the "Tuya Smart" APP, and the setting and usage methods are the same.

**2. After the installation is complete, follow the prompts to register and log in.**
Users can also download and install the APP by scanning the QR code below:

### 1. Register an account and add devices

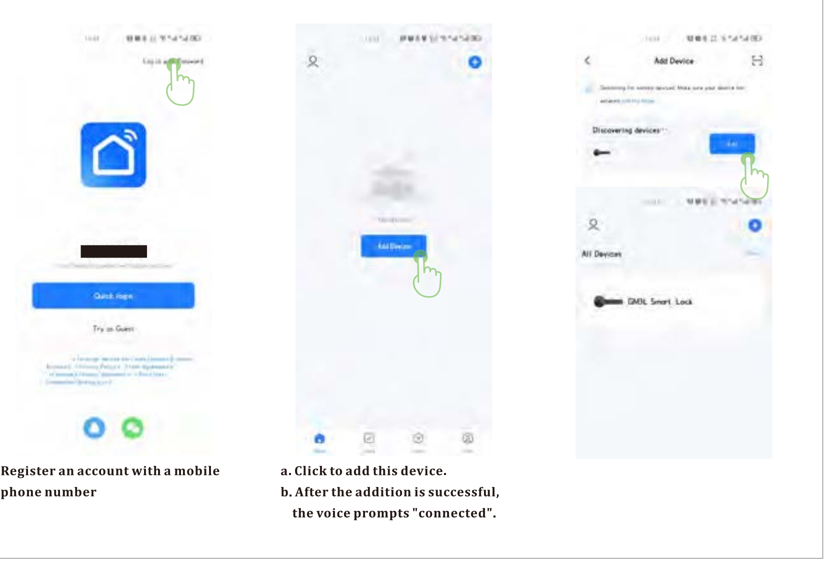

Register an account with a mobile phone number

a. Click to add this device.
b. After the addition is successful, the voice prompts "connected".

### 2. Improve family information

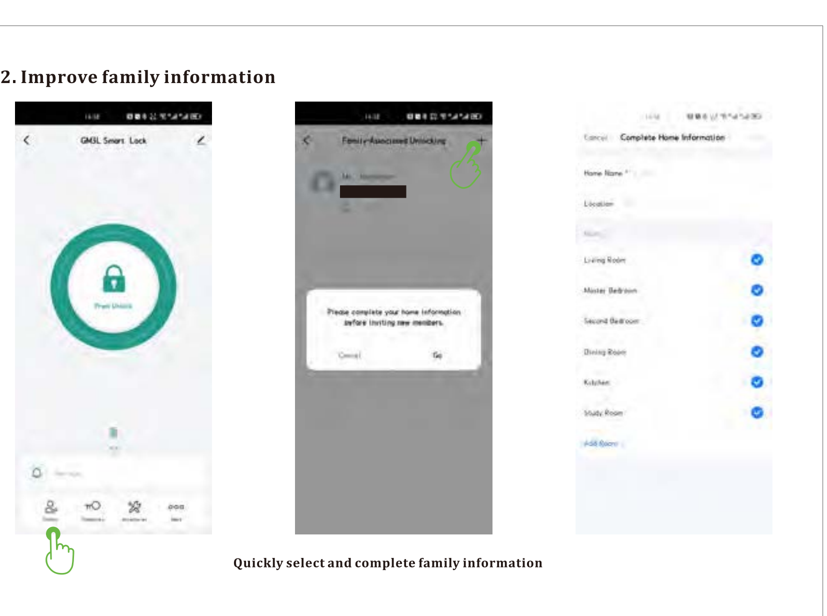

Quickly select and complete family information

### 3. Fingerprint and password enroll

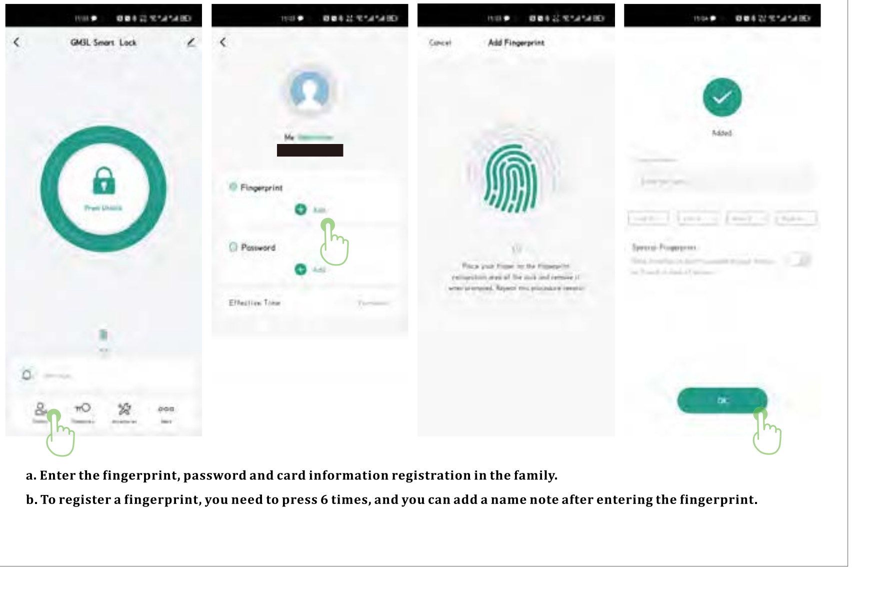

a. Enter the fingerprint, password and card information registration in the family.
b. To register a fingerprint, you need to press 6 times, and you can add a name note after entering the fingerprint.

### 3. Fingerprint and password enroll

### 4. Delete fingerprints and passwords

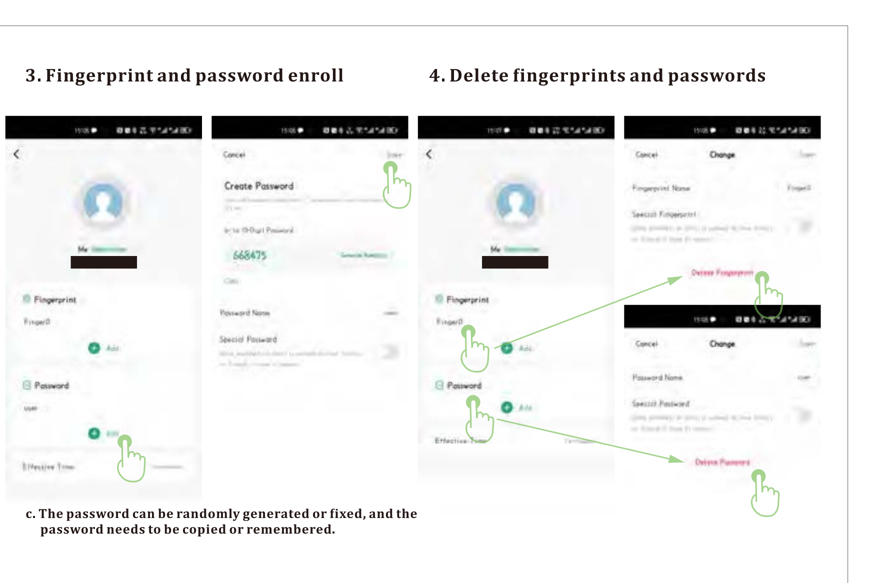

c. The password can be randomly generated or fixed, and the password needs to be copied or remembered.

### 5.One-time password

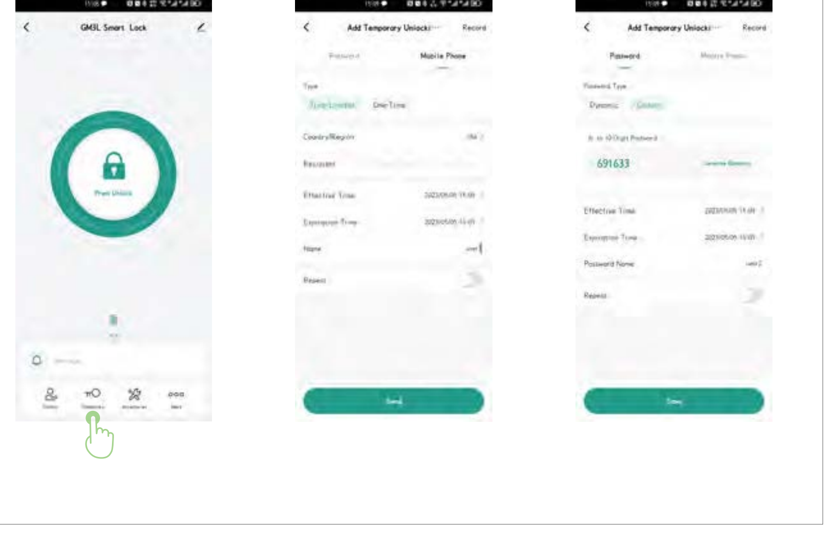

### 6. Log

### 7. More

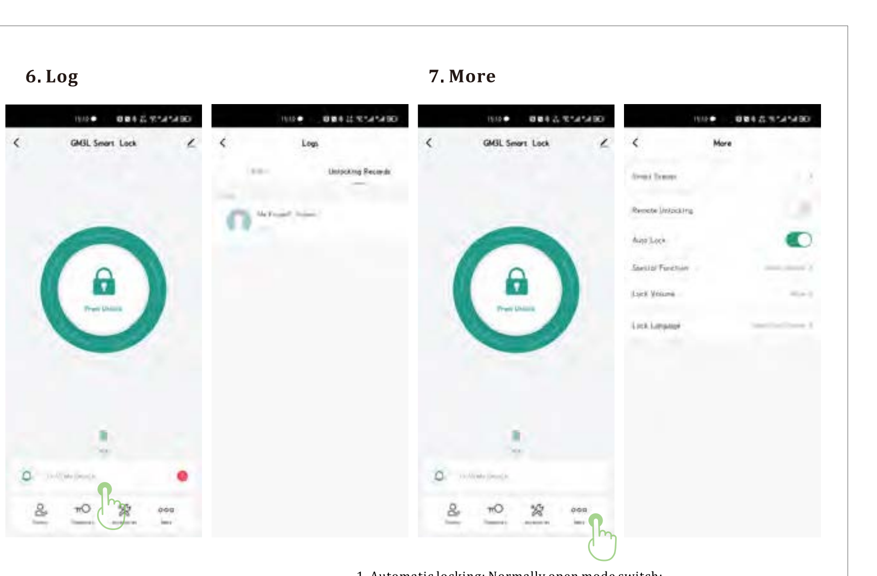

1. Automatic locking: Normally open mode switch;
2. Door lock volume: Mute setting, lock end entering menu will broadcast voice;
3. Door lock language: Switch between Chinese and English.

### 8. Unbind

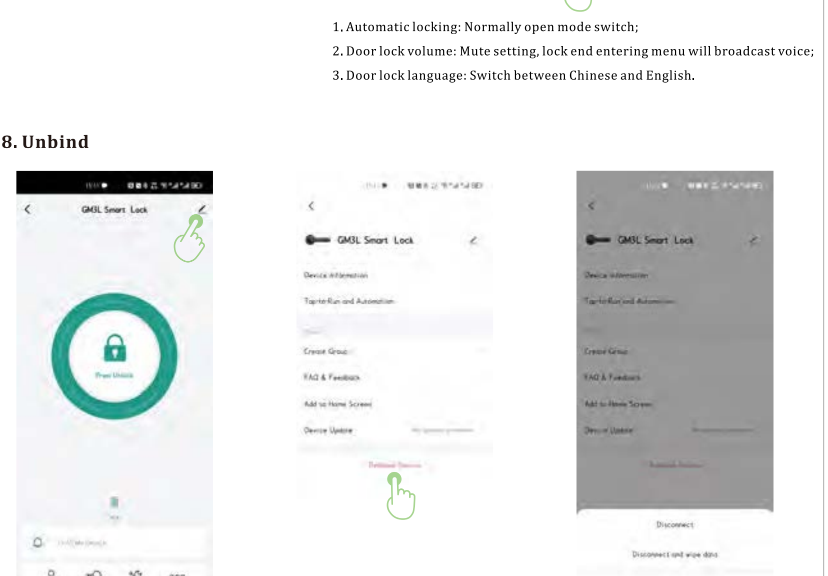

1. Unbind: The unlocking record is still retained;
2. Release and clear data: Restore factory settings, clear all information.

## FCC Warning Statement

Changes or modifications not expressly approved by the party responsible for compliance could void the user's authority to operate the equipment. This equipment has been tested and found to comply with the limits for a Class B digital device, pursuant to Part 15 of the FCC Rules. These limits are designed to provide reasonable protection against harmful interference in a residential installation. This equipment generates uses and can radiate radio frequency energy and, if not installed and used in accordance with the instructions, may cause harmful interference to radio communications. However, there is no guarantee that interference will not occur in a particular installation. If this equipment does cause harmful interference to radio or television reception, which can be determined by turning the equipment off and on, the user is encouraged to try to correct the interference by one or more of the following measures:

-- Reorient or relocate the receiving antenna.
-- Increase the separation between the equipment and receiver.
-- Connect the equipment into an outlet on a circuit different from that to which the receiver is connected.
-- Consult the dealer or an experienced radio/TV technician for help.

FCC Radiation Exposure Statement

The antennas used for this transmitter must be installed to provide a separation distance of at least 20 cm from all persons and must not be co-located for operating in conjunction with any other antenna or transmitter.

This device complies with Part 15 of the FCC Rules. Operation is subject to the following two conditions:
(1)This device may not cause harmful interference, and
(2)This device must accept any interference received, including interference that may cause undesired operation.