STAR TRAC®

CORE HEALTH & FITNESS

VIRTUAL BIKE

OWNER'S MANUAL

CONTACT SUPPORT NOW

TABLE OF CONTENTS

IMPORTANT SAFETY INSTRUCTIONS 3

IMPORTANT LABEL LOCATIONS 5

PRODUCT SPECIFICATIONS 5

ASSEMBLY 9

- REQUIRED TOOLS 9
- ASSEMBLY PARTS 10
- PROCEDURE 11

CONSOLE 23

- CONSOLE FEATURES 23
- USING THE CONSOLE 25
  - *RIDE SUMMARY* 27
  - *CONNECTING A DEVICE* 28
  - *CONNECTING TO ENTERTAINMENT* 31
  - *SCREEN SHARING* 31
- LOGIN EXPERIENCE 32
- FCC INFORMATION 33
- INDUSTRY CANADA INFORMATION 34
- MAINTENANCE MODE 35
  - *CONSOLE INFORMATION & SOFTWARE UPDATES* 36
  - *GENERAL SETTINGS* 37
  - *APPS* 39
  - *GENERAL SETTINGS* 41
  - *CONNECTING TO BLUETOOTH* 42
  - *CONNECTING TO WIFI* 43
  - *TESTING THE FAN* 43
  - *TESTING THE HDMI CONNECTION* 43
- GEAR CALIBRATION 44
- POWERMETER CALIBRATION 46
- ERROR LIST 47

MAINTENANCE 51

- TOOLS 51

REPLACEMENT PARTS 54

SUPPORT & SERVICE 73

WARNING!

Before using this product, it is essential to read the ENTIRE Owner's Manual and ALL installation instructions. The Owner's Manual describes equipment operation and instructs members on how to use correctly and safely.

Read all warnings posted on the machine.

Health related injuries may result from incorrect or excessive use of exercise equipment. Core Health & Fitness strongly recommends you to encourage your members to discuss their health program or fitness regimen with a health care professional, especially if you or they have not exercised for several years, are over 35, or have known health conditions.

WARNING: to reduce the risk of serious injury to persons using this equipment, read and follow all of these warnings:

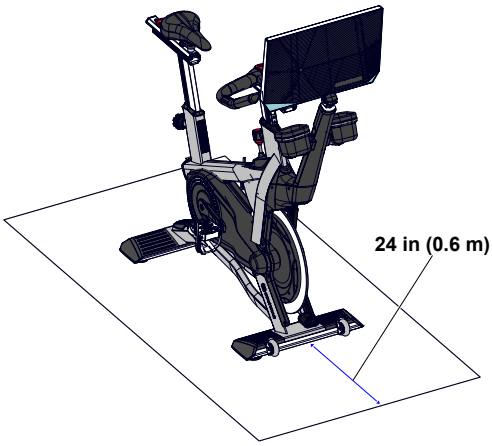

Fig. 1 Required Clearance

1. Assemble and operate the machine on a solid level surface. Position the machine with a minimum of 23.6 inches (0.6 meters) of clearance on at least one side and 23.6 inches (0.6 meters) either behind or in front of the exercise bicycle.

   Leave a minimum of 19.7 inches (0.5 meters) between two adjacent units. These dimensions are the recommended minimum distances.

   The actual area for access and passage shall be the responsibility of the facility and should take into account this training envelope, Americans with Disabilities Act Accessibility Guidelines (ADAAG) requirements and any required local codes or regulations (www.access-board.gov/ada).

   The clear safety area recommendations are accurate as of the time of this manual publication, Core Health & Fitness strongly recommends that you review the latest applicable standards from:

   ASTM standards for Stationary Training Equipment (https://www.astm.org/) and ISO standards for Stationary Training Equipment (https://www.iso.org)

2. This equipment is designed for use in a commercial gymnasium or health club. To ensure the proper use of the equipment in a safe manner, all users of the equipment should read this manual before using the machine. This machine should be made a part of your club training program in order that the equipment is used by your members in a safe manner as intended. In addition to instructing the club members in the proper use of the equipment, the club member should obtain a complete physical examination form their health care provider before beginning any exercise program.

3. The safety and integrity of this machine can only be maintained when the equipment is regularly examined for damage and wear and repaired. It is the sole responsibility of the owner of this equipment to ensure that regular maintenance is performed. Worn or damaged parts must be replaced immediately or the equipment removed from service until the repair is made.

4. Do not exceed the maximum allowable user weight limit of:

   - 350 lbs. (159 kg.)

5. It is the purchaser's sole responsibility to properly instruct its end users and supervising personnel as to the proper operating procedures of all Startrac equipment.

6. Care should be used when mounting or dismounting the equipment. Before mounting or dismounting, move the pedal on the mounting or dismounting side to its lowest position and bring the machine to a complete stop.

7. Keep the top surface of the pedals clean and dry.

8. This unit is not equipped with a free-wheel. Pedal speed should be reduced in a controlled manner.

9. When adjusting any seat, slider, pop-pin or any other type of adjuster, make certain that the adjusting pin is fully engaged in the hole to avoid injury. If any of the adjustment devices are left projecting, they could interfere with the user's movement.

10. This machine is not intended to be used by children. It is not intended to be used by persons with reduced physical, sensory, or mental capabilities or lack of experience and knowledge, unless given instruction and under the personal supervision concerning use of the machine by a person responsible for their safety. Do not leave children unsupervised around the machine.

11. Wear proper exercise clothing and athletic shoes during a workout. Avoid wearing loose clothing. Tie back long hair and keep towels away from the moving parts. Face forward at all times and never attempt to turn around while the machine is moving.

12. Obtain a medical exam before beginning any exercise program. If at any time during exercise you feel faint, dizzy, or experience pain, stop and consult your physician. Use the value calculated or measured by the console for reference purposes only.

13. ⚠ **WARNING**: There is risk of explosion if the battery is replaced with an incorrect type. Dispose of used batteries according to the manufacturer's instructions.

14. Use only replacement components supplied by Startrac. Substitutes are forbidden and will void all warranties.

15. ⚠ **DANGER**: Pedals that have not been tested and qualified by Startrac should never be used on Startrac bikes. Unqualified pedals can lead to pedal failure and serious injury to the rider.

16. ⚠ **WARNING**: Do not open the generator chain guard unless instructed.

17. ⚠ **WARNING**: Heart rate monitoring systems may be inaccurate. Over-exercising may result in serious injury or death. If you feel faint stop exercising immediately.

SAVE THESE INSTRUCTIONS

IMPORTANT LABEL LOCATIONS

This page shows the location of the warning labels and communication stickers placed on the equipment as part of the manufacturing process. It is critical that owners maintain the integrity and placement of these stickers. If you find any stickers missing or damaged the replacement numbers are shown on the support site and following pages. See Support and Service to order replacements.

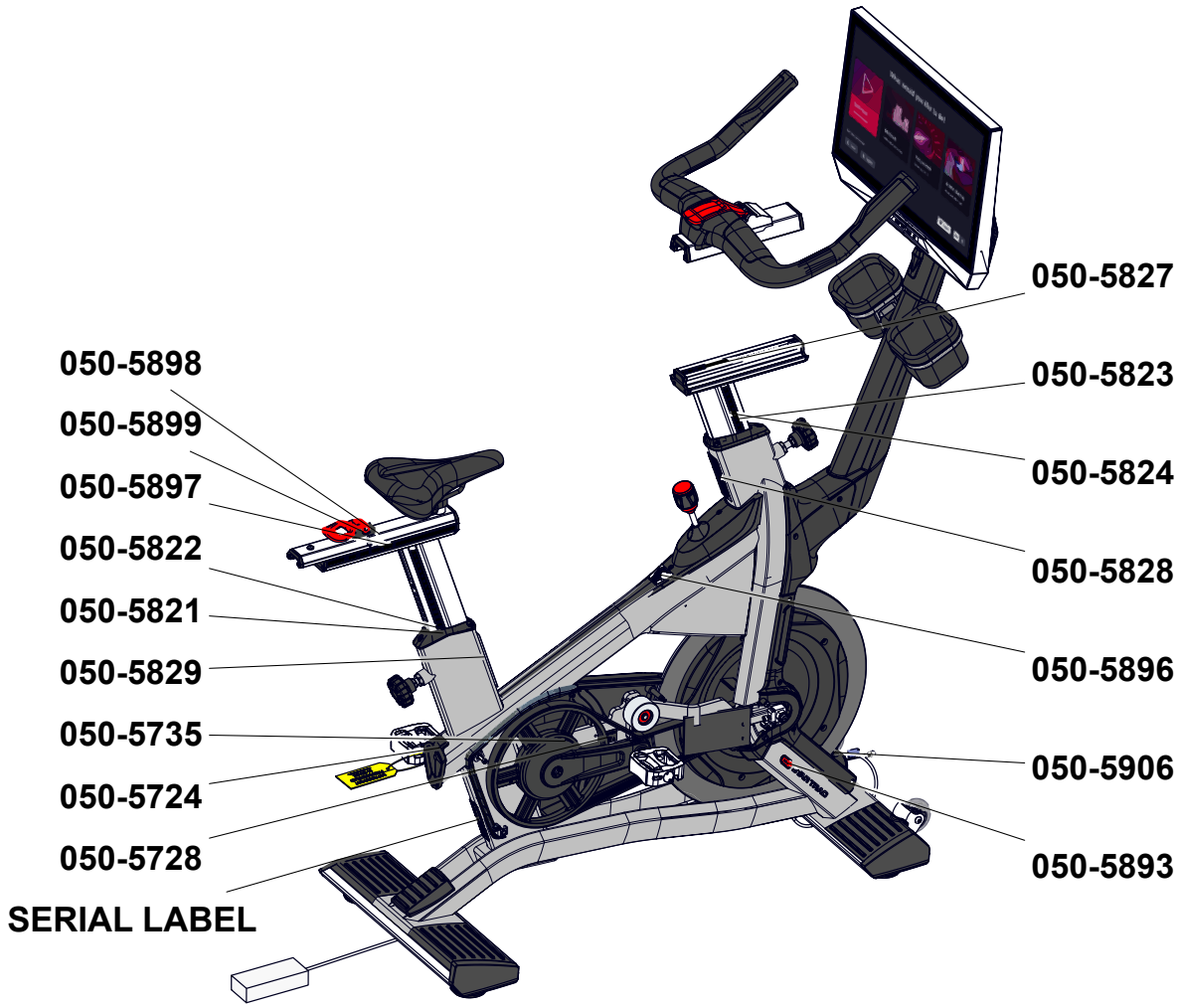

Fig. 2 Important Label Locations

PRODUCT SPECIFICATIONS

SKU: 9-7555-8VB **Desc:** **Virtual Bike**

Unit Weight		Width		Length		Height		Max User Weight	
176	lbs	**20.7**	in	**44.4**	in	**59.7**	in	**350**	lbs
79.8	kg	**53**	cm	**113**	cm	**152**	cm	**159**	kg

050-5821 STICKER, SEAT POST, PLACEMENT, RIGHT, UGC	**050-5822** STICKER, SEAT POST, PLACEMENT, LEFT, UGC	**050-5823** STICKER, HBAR POST, PLACEMENT, RIGHT, UGC	**050-5824** STICKER, HBAR POST, PLACEMENT, LEFT, UGC	**050-5825** STICKER, FORE/AFT, SEAT SLIDER, RIGHT, UGC	**050-5826** STICKER, FORE/AFT, SEAT SLIDER, LEFT, UGC

DO NOT LOOSEN SET AT FACTORY	50Nm	WARNING Heart rate monitoring systems may be inaccurate. Over exercising may result in serious injury or death. If you feel faint stop exercising immediately. This stationary training equipment is not suitable for high accuracy purposes.
050-5735 LABEL, DO NOT LOOSEN, ZX BIKES	**050-5724** LABEL, PEDAL BOLT TORQUE	**050-5892** LABEL,WARNING, MEDICAL, VIRTUAL BIKE

Notice: images are not to scale

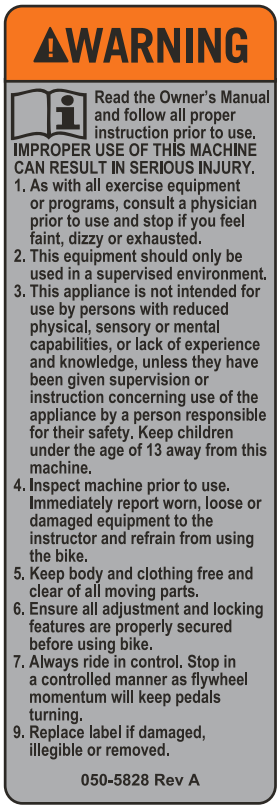

050-5828

LABEL, WARNING, ENGLISH, UGC

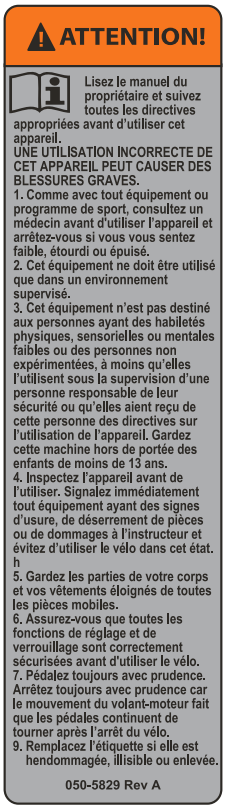

050-5829

LABEL, WARNING, FRENCH, UNIVERSAL CYCLE

050-5827

STICKER, FORE/AFT, HBAR SLIDER, UGC

STAR TRAC®

050-5893

DECAL, FORK, VIRTUAL BIKE

Notice: images are not to scale

BIKE OPERATIONS

Adjusting the Handlebar or Seat Slider

1. Raise the slider cam lever (handlebar) or seat cam lever (seat) to adjust slider.
2. Adjust slider to desired position.
3. Return lever to original position to lock. Ensure cam lever is secure before using the unit.

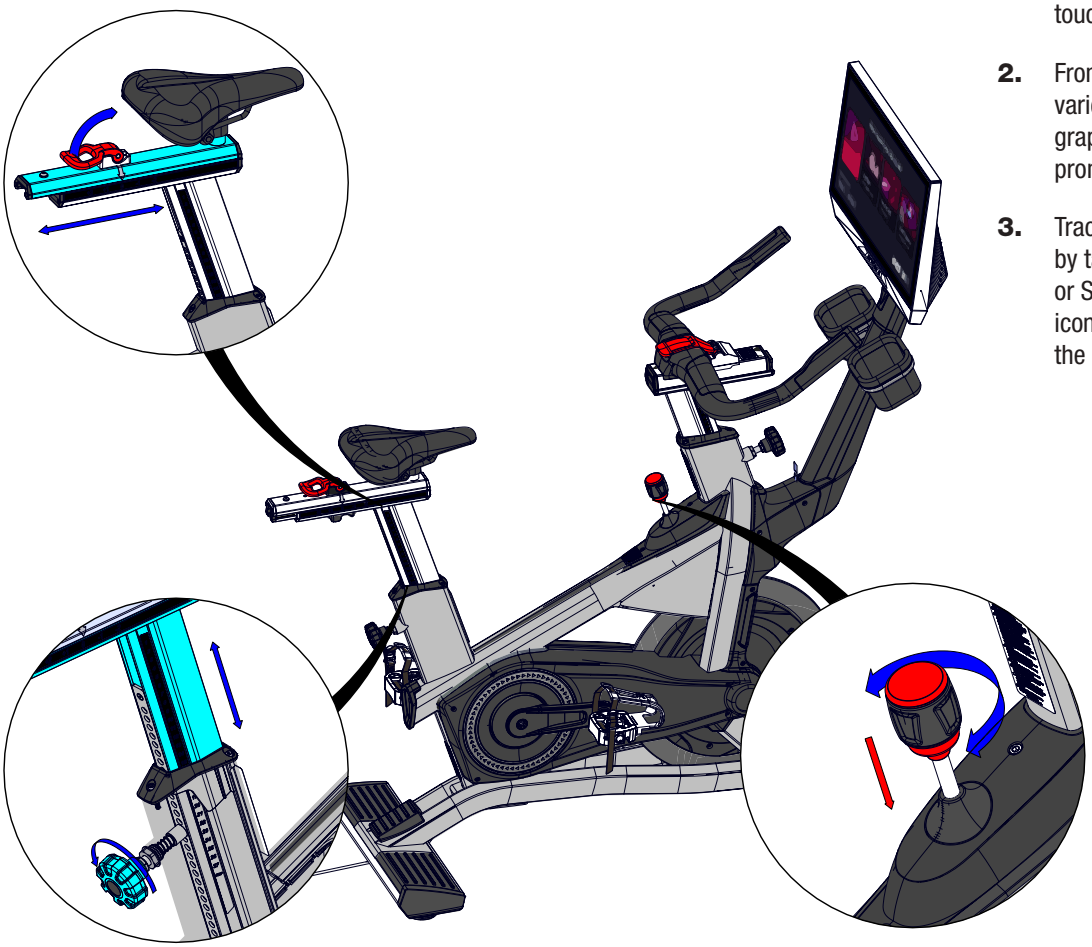

Basic Console Instructions

1. If screen saver is active, pedal or touch screen to activate main menu.
2. From main menu, select from a variety of workout options using the graphical interface and following the prompts on screen.
3. Track and save your workout data by tapping to pair your Apple Watch or Samsung Galaxy Watch on the icon at the bottom right corner of the display

Adjusting Seat Post or Handlebar Post height with Locking Pop Pin

1. Turn pop-pin counterclockwise and pull to loosen.
2. While having the pop-pin pulled out, adjust the seat or handlebar tube to desired height.

   ⚠ WARNING: Do not lift the Seatpost or Handlebar posts above the STOP mark on the tube.

3. Release pop-pin and turn clockwise to lock. Tighten pop-pin until post is secure without wobble.

Emergency Stop

1. To stop press down on the emergency stop handle.

Adjusting the Resistance

1. Turn clockwise to add resistance.
2. Turn counter-clockwise to reduce resistance.

REQUIRED TOOLS

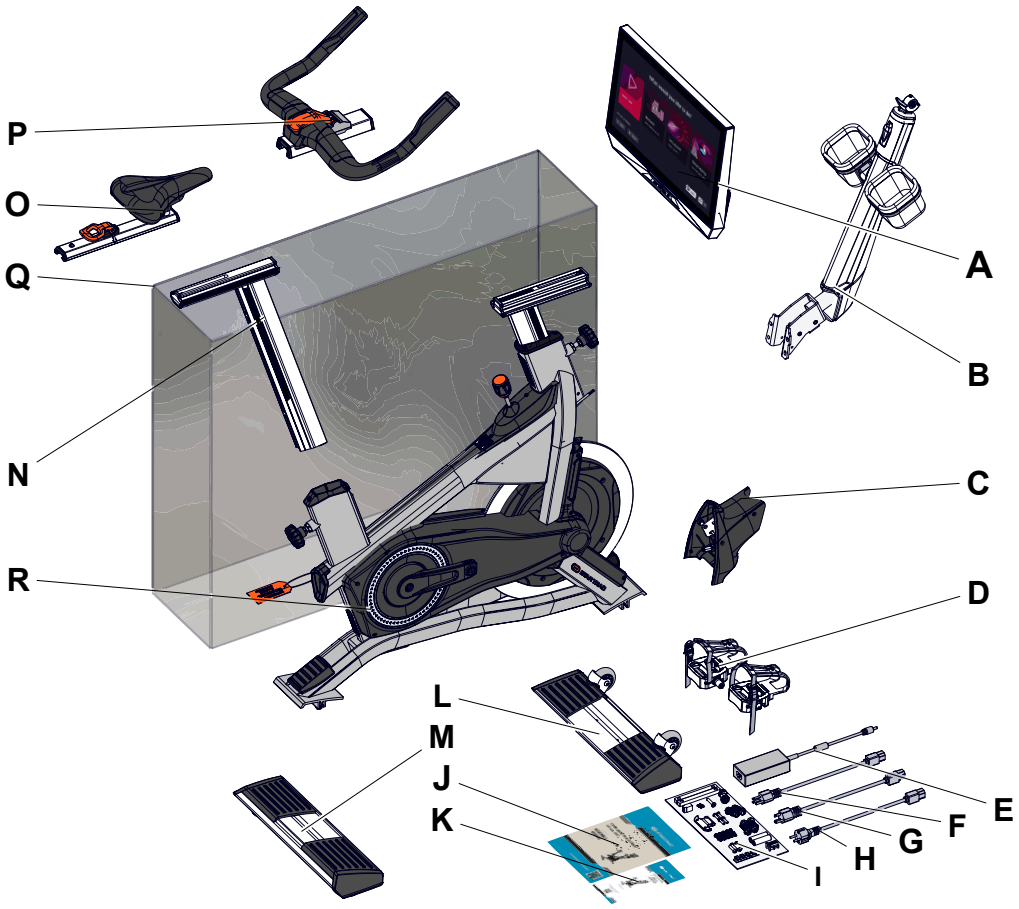

Fig. 3 9-7555 Shown[1]

Required Tools:

- Torque Wrench
- 4mm, 5mm Allen Keys
- 4mm, 5mm, 8mm, 13mm Allen Socket
- 13mm Open-Ended Wrench
- #2 Phillips Screwdriver

Parts Included In the Box[2]:

#	PN	Description
A	727-0144	KIT, CONSOLE, VIRTUAL, BIKE
B	727-0260	VIRTUAL BIKE NECK WELDMENT
C	700-0541-XX	VIRTUAL BIKE NECK COVER
D	718-6328	ASSY, SET, PEDALS, S5/S7
E	020-7431-XX	POWER SUPPLY, 90-260VAC/12VDC 5A MIN
F	740-3156	ADAPTER,CORD LINE, NEMA 5-15
G	740-9020	ADAPTER,CORD LINE, NEMA 6-15
H	220-0270	ADAPTER, CORD LINE, CEE 7/7
I	220-0271	VIRTUAL BIKE, BLISTER PACK 1

#	PN	Description
J	220-0272	ASSEMBLY MANUAL, STAR TRAC, VIRTUAL BIKE
K	712-4022	OWNERS MANUAL, STAR TRAC, VIRTUAL BIKE
L	740-9537-XX	ASSY, FOOT, FRONT, NEXT GEN BIKE
M	740-9556-XX	WELDMENT, CROSS BEAM, REAR
N	727-0276	WELDMENT, POST, SEAT, UGC
O	727-0275	WELDMENT, SLIDER, SEAT, UPPER, UGC
P	727-0260	ASSY, HBAR V2, VIRTUAL BIKE
Q	050-5903	CARTON, UGC CORE H&F
R	9-7555-XXXXP0	STAR TRAC, VIRTUAL BIKE BASE

1 Item A (Console) ships in a separate box.
2 For a complete list of replacement parts see the online Owner's Manual or through CoreConnect on **page 73**

ASSEMBLY PARTS

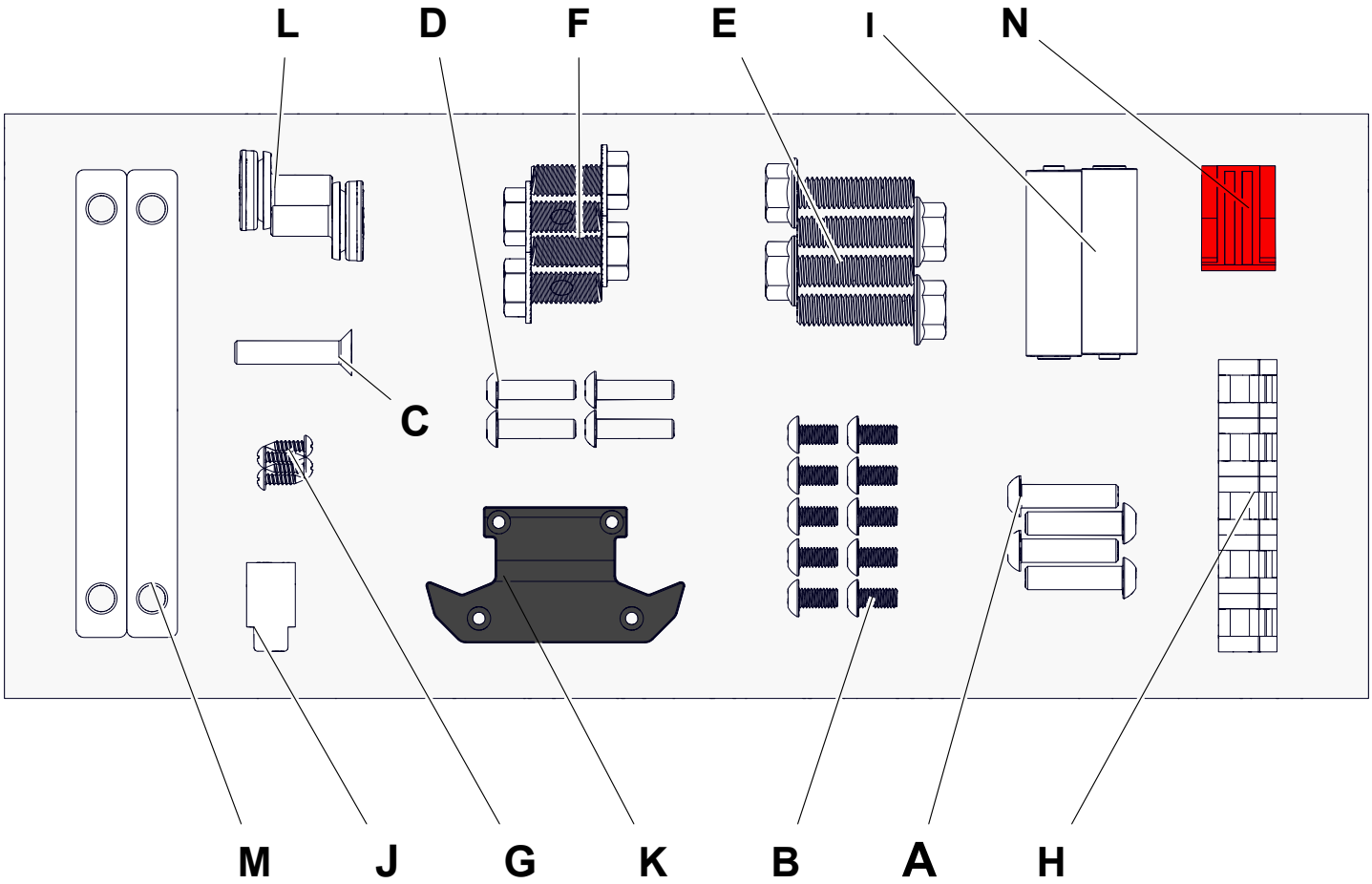

Fig. 4 Assembly Parts - Print this page to compare.

#	PN	Description
A	110-3178	SCREW, M6x25, BHC, HK, AS, BO
B	110-3484	SCREW, M5x0.8, 10mm, BHC, HK, SS, BO
C	110-3507	SCREW, M6x1.0, 30mm, FHM, HK, SS
D	110-3996	SCREW, M5X0.8, 20MM, BHC, HE, SS
E	110-4081	SCREW, M8x1.25, 30mm, HHC, AS, ZC, FL, Gr-10.9
F	110-4332	SCREW, M8x1.25, 18mm, HHC, HE, AS, ZP, SF, NP, Grd-10.9
G	110-4343	SCREW, M2.9, 10mm L, PHTF, PH, SS, 18.8 STAINLESS
H	140-3837	CABLE CLIP, ADHESIVE, BLACK
I	580-0307	BATTERY, AA SIZE, 1.5V
J	718-6110	STOPPER, F/A, HBAR, ACPU
K	727-0253	CAP, LOWER, BAR SLIDER V2.2
L	740-8145	BOLT, CRANKARM, M8
M	740-8247	THREADED PLATE, FEET, BLADE
N	740-8607	CALIBRATION TOOL, ZERO POINT, ACPP

DO NOT USE BLADES TO OPEN

PACKAGING REMOVAL:

Unit is heavy and requires two people for assembly.

Carefully remove all packaging materials that wrap the equipment.
DO NOT USE A KNIFE OR BOX CUTTER AS YOU MAY DAMAGE THE EQUIPMENT.

At this time remove any sub-components from the pallet and set aside for later assembly. Once all packaging has been removed, lay all parts out in a clean open area to prepare for assembly. Should any component not be present or if you have any operational questions, please refer to **SUPPORT & SERVICE**

After assembly, a complete visual inspection, and test of the features and functions of the assembled unit must be made prior to use.

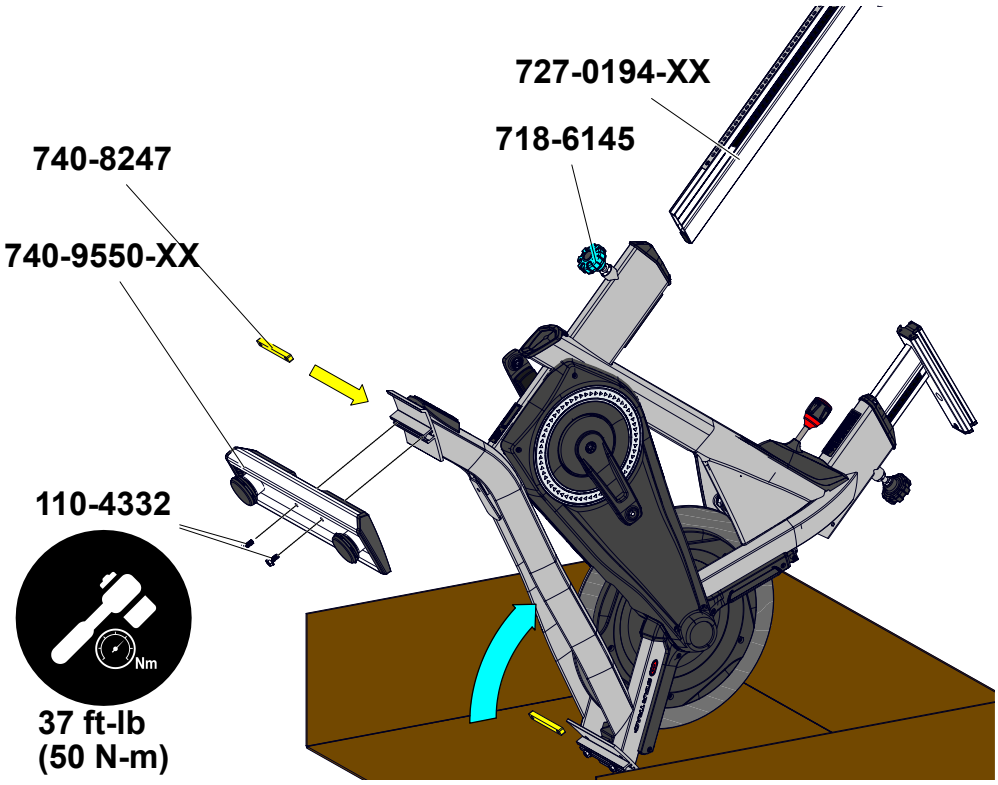

Fig. 5

1. Tip the bike forward or rotate to slide threaded foot plates 740-8247 into the frame.

   Note: Use a blanket or foam casing from the box to tilt the bike onto to avoid damage.

2. Use a 13mm open-ended wrench to secure the rear stabilizer 740-9550-XX to the frame with 2 M8 x 18mm flange bolts 110-4332.

3. Use a torque wrench with a 13mm allen socket to torque the flange bolts to 37 ft-lb (50 N-m)

4. Return bike to standing then install the Seat Post 727-0194-XX into the bike frame by loosening pin 718-6145

5. Loosen the seat slider tension lever, then tip bike backwards.

   Note: Use a blanket or foam casing from the box to tilt the bike onto to avoid damage.

6. Use a 13mm open-ended wrench to secure the front stabilizer 740-9537-XX to the frame with 2 M8 x 18mm flange bolts 110-4332.

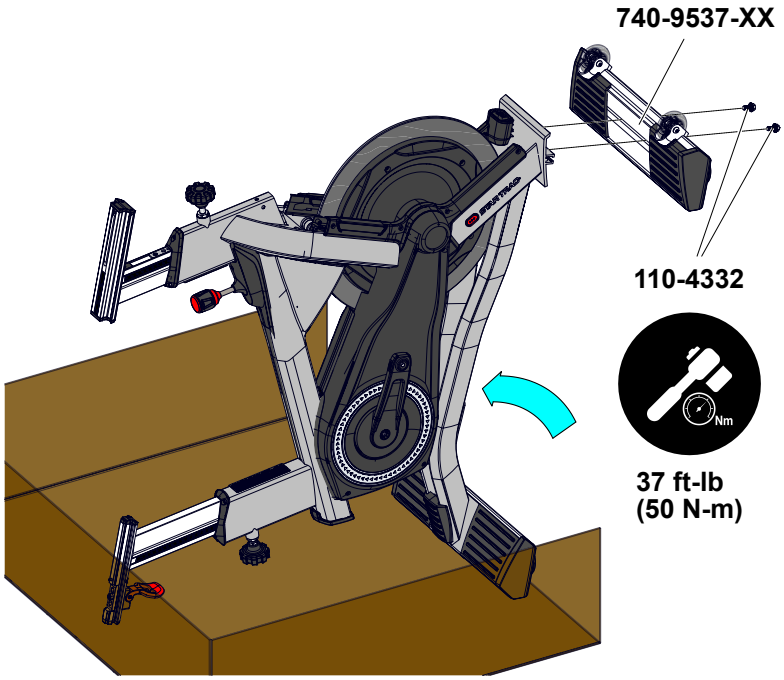

Fig. 6

7. Use a torque wrench with a 13mm allen socket to torque the flange bolts to 37 ft-lb (50 N-m).

8. Return the bike to standing.

9. Loosen the seat slider tension lever, then slide the seat assembly onto the seat post.

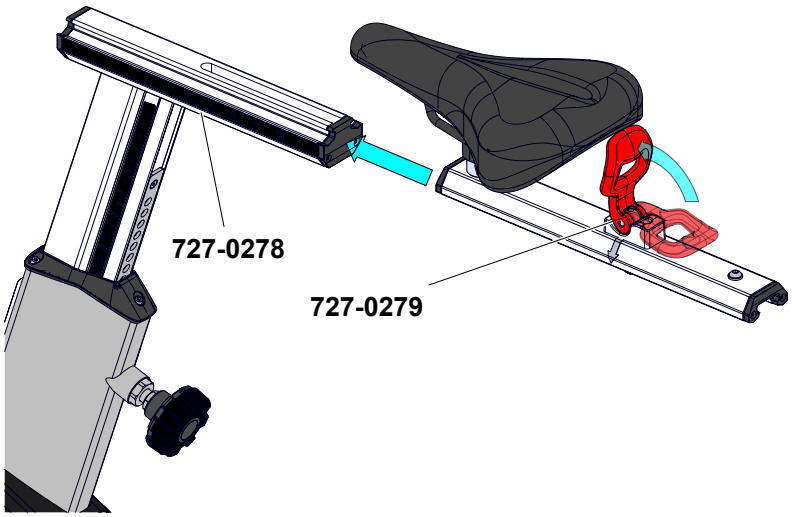

Fig. 7

10. Install the right pedal into the right crank arm, then hand-thread the M8 pedal bolt through the crank arm and into the pedal.

11. Use a torque wrench with an 8mm allen socket to torque the pedal bolt to 37 ft-lb (50 N-m).

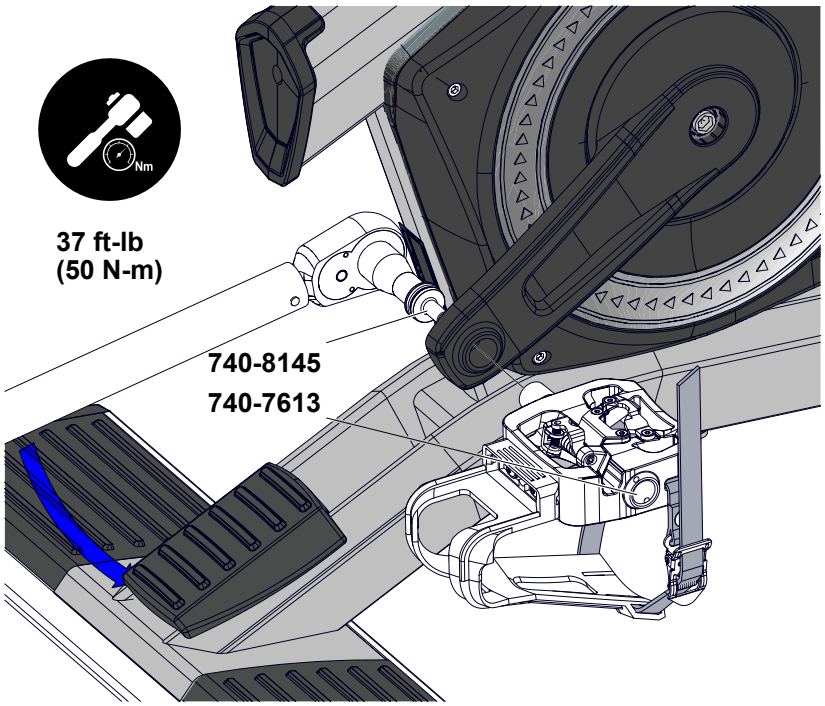

Fig. 8

12. Install the left pedal into the left crank arm, then hand-thread the M8 pedal bolt through the crank arm and into the pedal.

13. Use a torque wrench with an 8mm allen socket to torque the pedal bolt to 37 ft-lb (50 N-m).

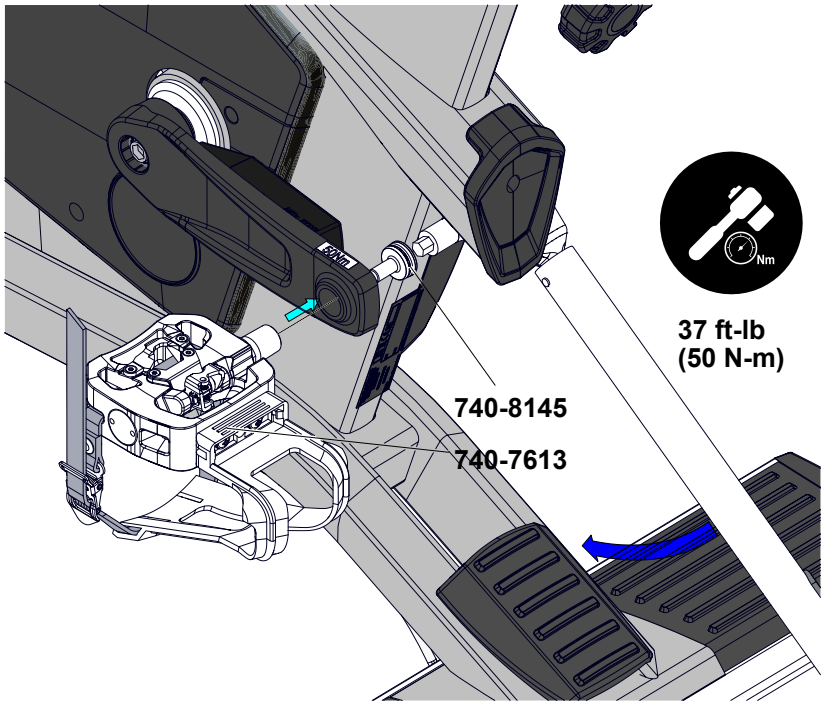

Fig. 9