14. Use a #2 phillips screwdriver to remove the battery cover on the powermeter.

15. Remove two AA batteries from blister pack and install.

16. Raise handle on handlebar assembly 727-0260 and slide handlebar onto post.

17. Install handlebar stopper 718-6110 and secure with screw 110-3507.

18. Install front cap 727-0253 with four screws 110-4343

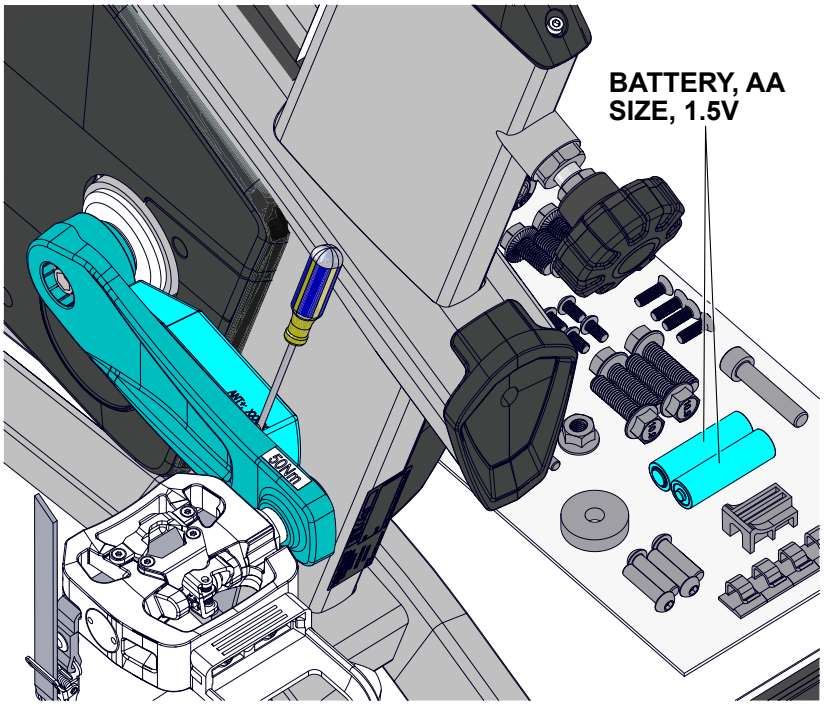

Fig. 10

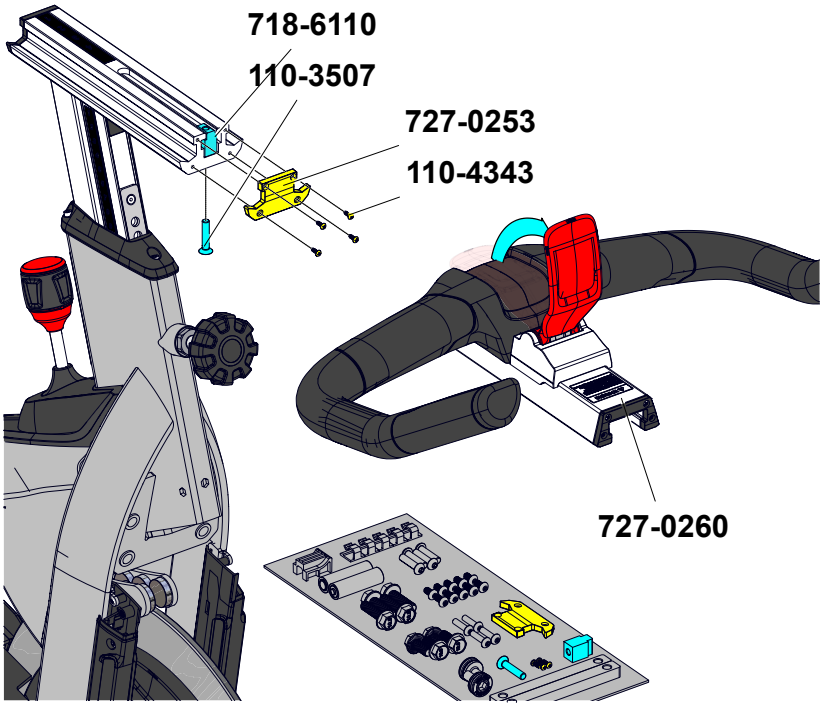

Fig. 11

19. Secure mast assembly 718-6328 to bike frame with four screws 110-4081.

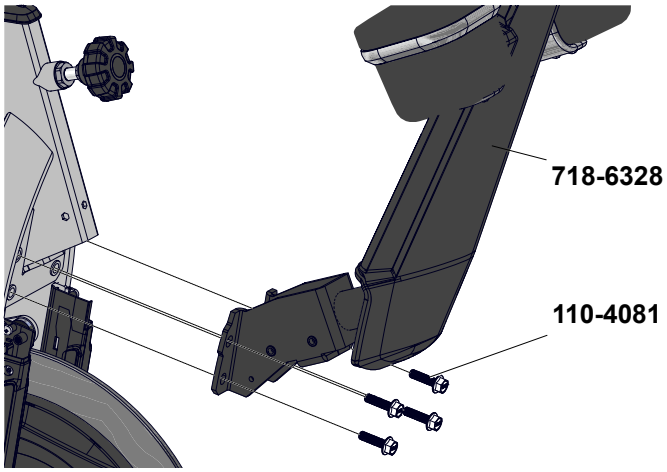

Fig. 12

20. Remove neck wiring cover, feed wires through and connect cables to console prior to installing plastics.

21. Connect console to console mast using four screws 110-3178.

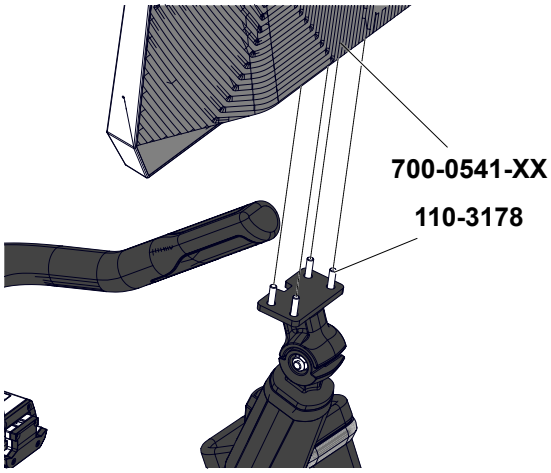

Fig. 13

22. Reinstall neck wiring cover.

23. Fold hinge 740-3152 then secure hinge to shroud assembly 740-3152 with four screws 110-3484.

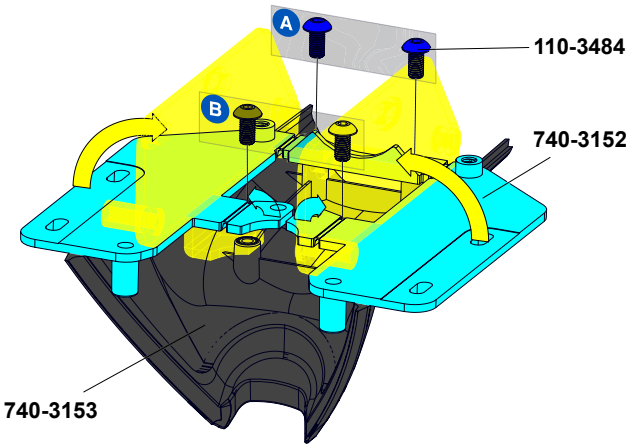

Fig. 14

24. Secure shroud assembly to console mast with four screws 110-3996.

25. Secure right shroud 740-3155 to bike with four screws 110-3484.

26. Secure left shroud 740-3154 to bike with four screws 110-3484.

27. Once the bike is fully assembled, move it into the ride location, then adjust the four (4) leveling feet located on the front and rear stabilizers to level the bike and ensure it does not move or wobble during the ride.

NOTE: If the bike is physically moved, the leveling feet may need to be readjusted.

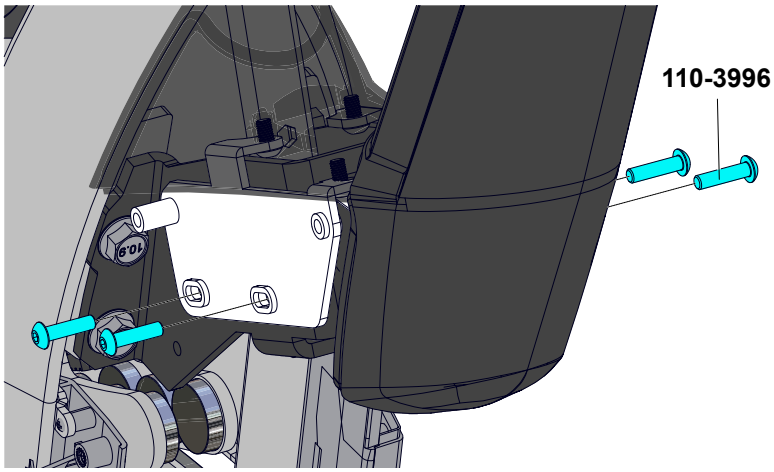

Fig. 15

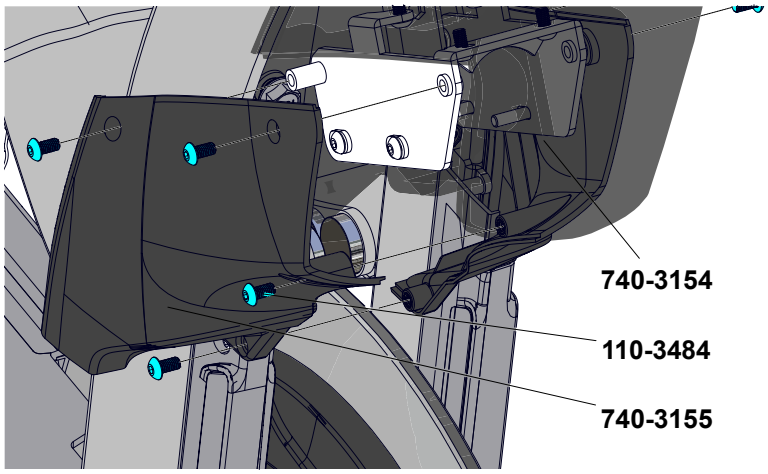

Fig. 16

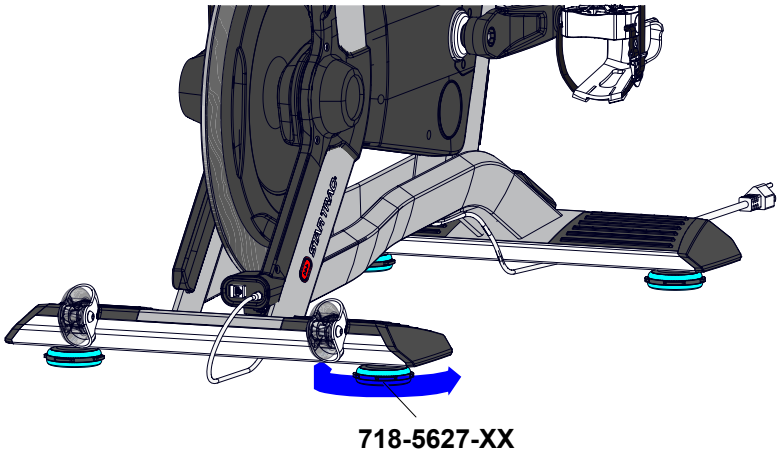

Fig. 17

28. Plug in bike power cord and Ethernet cable (preferred).

29. Console will load to welcome screen then proceed to wifi selection screen if no Ethernet connection is detected. Tap preferred network then tap Connect.

30. When network is selected, keyboard will appear. Type password into screen and tap Connect.

31. Once connection is established, console will display a ✓ icon and success message then check for updates. Updates can take up to 30 minutes to complete.

Fig. 18

32. Fill information and follow registration prompts to register your machine.

33. On the Login Experience prompt (Fig. 19) Use email address of facility manager and send. They will receive a log-in code within 5-10 business days that they can use to activate the Virtual Bike Log In Experience. This allows users to save and access workout history, metrics and more.

If facility already has credentials, they may enter credentials here.

Fig. 19

Fig. 20

34. When the console starts to display the ‘searching’ screen in Fig. 20 spin the cranks to connect the powermeter to the display. Ensure you are connecting the crank ID etched into the crank.

Fig. 21

35. From the main screen tap the upper left (A) then right (B), then left (A) to open the password prompt.

36. Enter password 218 then tap the ✓ button.

37. Tap **Maintenance** to display the sub-menu.

38. Tap **Sensors** then **Gear** then tap **Start**.

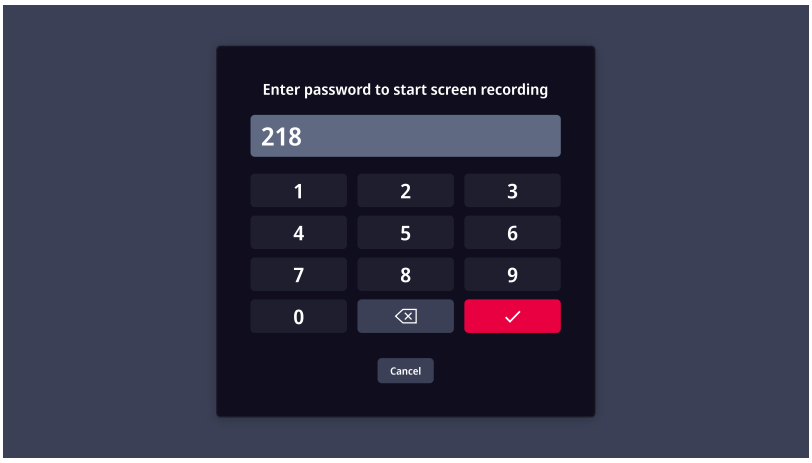

Fig. 22

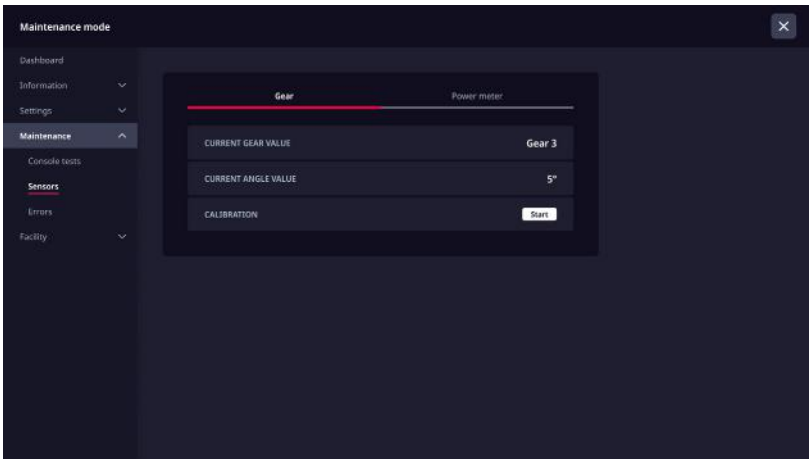

Fig. 23

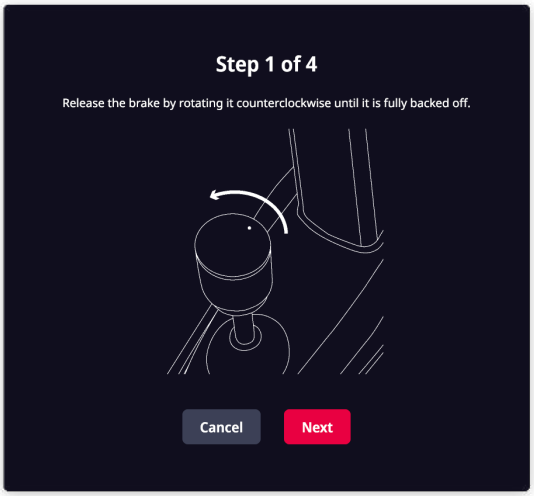

Fig. 24

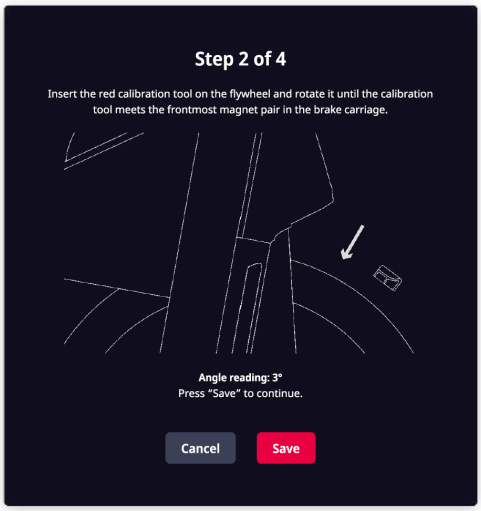

Fig. 25

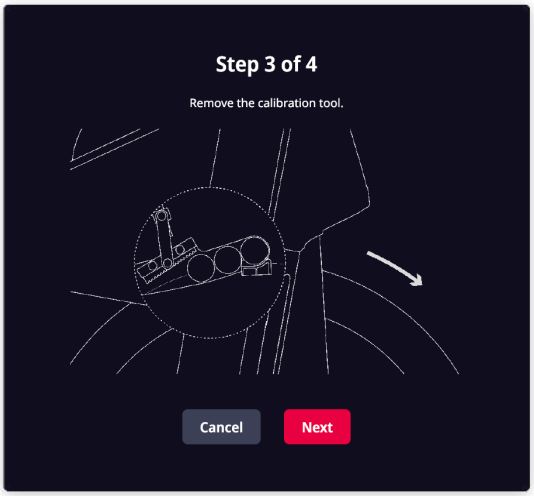

Fig. 26

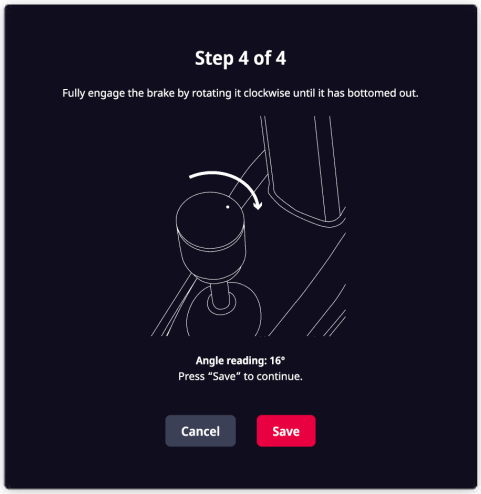

Fig. 27

40. Follow the on-screen prompts to calibrate the gear.
Tap the button at each step to advance.

a. Release the brake by rotating it counterclockwise until it is fully backed off.
b. Insert the red calibration tool on the flywheel and rotate it until the calibration tool meets the frontmost magnet pair in the brake carriage.
c. Remove the calibration tool.
d. Fully engage the brake by rotating it clockwise until it has bottomed out.

41. When "Calibration completed " displays tap **Close**. If "Something went wrong" displays tap **Try Again** and repeat step 40.

42. When display returns to maintenance mode screen, tap **Power Meter** then tap **Start**.

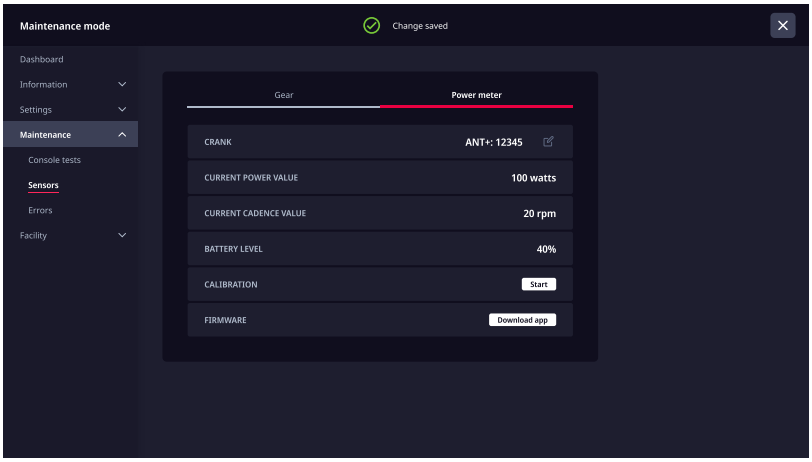

Fig. 28

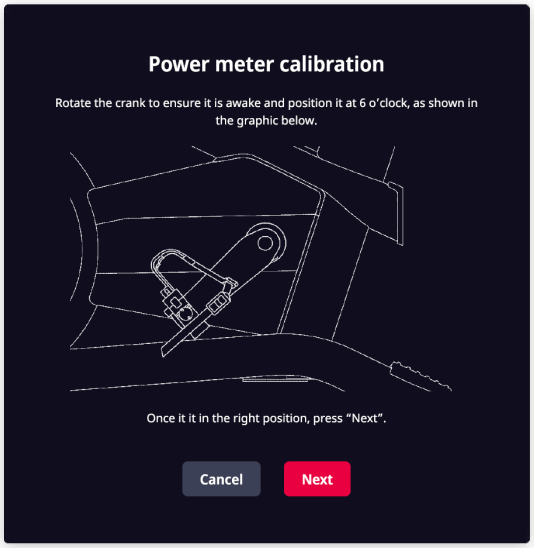

Fig. 29

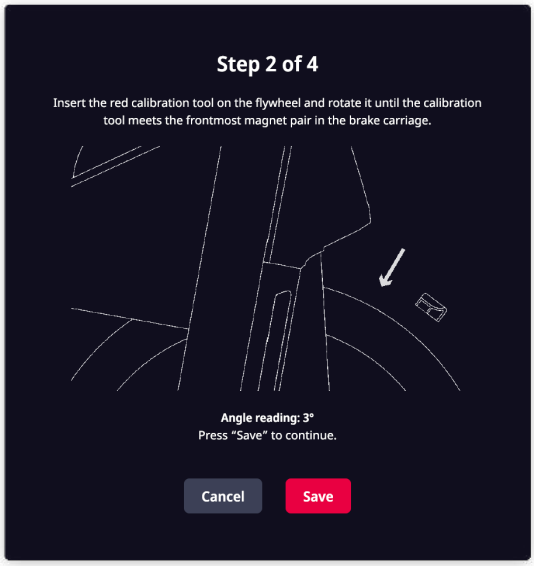

Fig. 30

43. Rotate the crank to ensure it is awake and position it at 6 o'clock, as shown in Fig. 31. Once it is in the right position, Tap **Next**

44. When "Calibration completed" displays tap **Close**. If "Something went wrong" displays tap **Try Again** and repeat step 43.

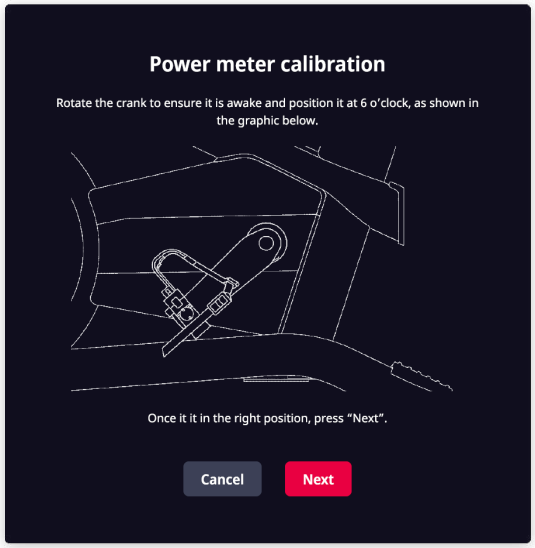

Fig. 31

Fig. 32

45. Assembly is complete.

CONSOLE FEATURES

Fig. 33

If screen saver is active, pedal or touch screen to activate main menu.

From main menu, select from a variety of workout options using the graphical interface and following the prompts on screen.

Track and save your workout data by tapping to pair your Apple Watch or Samsung Galaxy Watch on the icon at the bottom right corner of the display.

Screen Elements		
Log in	**Log in Button**	Logs user into their profile.
Register	**Register Button**	Allows user to register an account.
English	**Language Button**	Allows user to select which language text appears in.
Km Mi	**Units Button**	Allows user to select unit of length between kilometers and miles.

Screen Elements		
	Settings Button	Allows user to access and change settings.

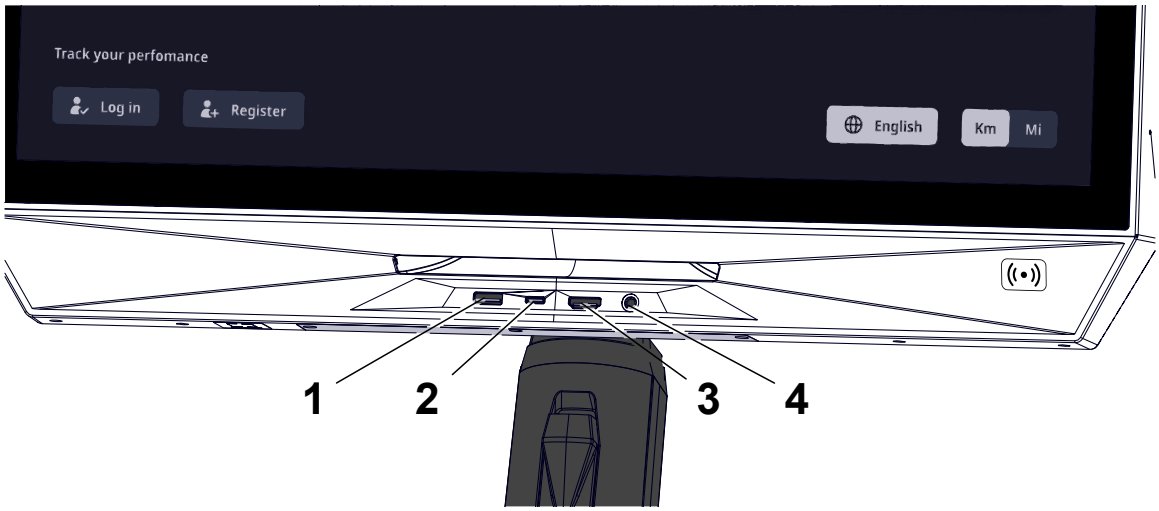

Fig. 34 Console Ports

Console Ports

The console is equipped with four different ports, as shown in Fig. 34 and the ports perform the following functions:

1. **USB Type A:** Power charging only
2. **USB Type C:** Power charging only
3. **HDMI:** Used to link the console for screen sharing with another device
4. **Headphone Jack:** Used to directly connect headphones to the console

Frame Ports

The console connects through the lower frame ports in the front stabilizer:

5. **Ethernet:** Preferred connection method
6. **Power**

Connectivity

- Recommended minimum download network speed: 10-15 MB/s or faster
- Ethernet cable connection is supported (recommended)
- If you are using wireless connections, make sure the space where the bike will be placed has a strong Wi-Fi signal

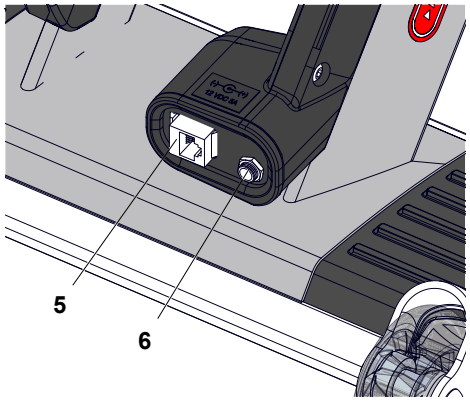

Fig. 35 Frame Ports

CUSTOMIZING YOUR RIDE

1. The first time you choose an option from the main screen the personalization options will appear. Once you enter information it will save for the remainder of your time on the bike.

2. Tap an option to choose or change it from the default values. Tap any ⓘ button by an option for additional information.

3. If a HR device is connected to the console the ♥ will display (Fig. 3).

4. Tap the Start button to save changes and begin the selected program.

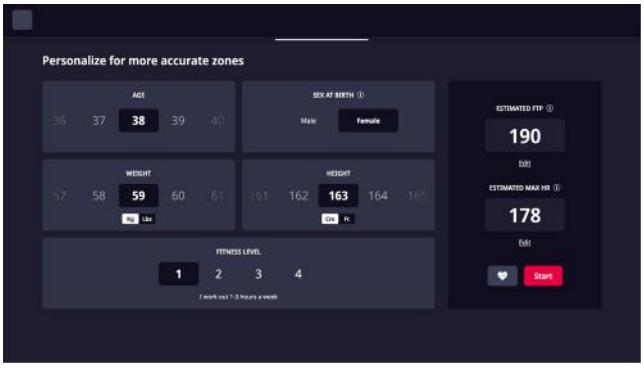

Fig. 36 No device connected

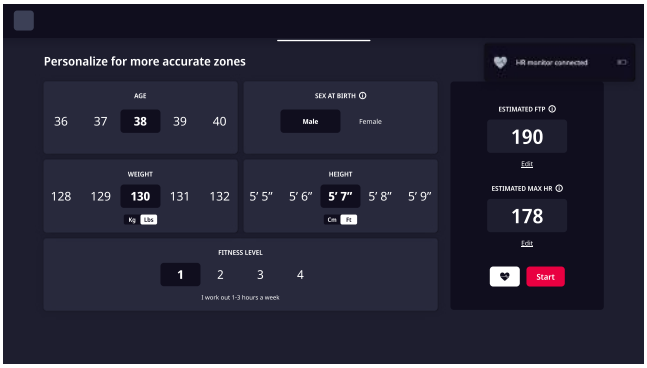

Fig. 37 HR monitor connected

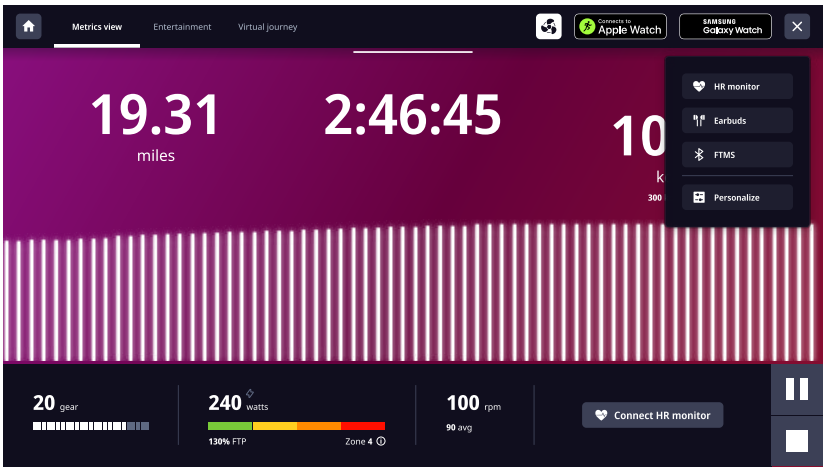

Fig. 38

Active Screen Elements (Fig. 38 on page 25)		
Home	**Home Button**	Brings user back to the home screen.
Fan	**Fan Button**	When tapped, the fan is turned on. User can select fan speed of low and high.
	Volume Button	When the user connects their earphones, the volume icon appears in the header bar. If the user press the volume icon it shows the slider to change the volume. After 2 seconds, the bar will disappear.
gear	**Gear Setting**	Shows the setting the gear is in.
watts	**Watts Rate**	Shows the current watts generated.
100 rpm	**RPM Rate**	Shows the current revolutions per minute.
124 bpm	**Reset Button**	Located under the console. Forces console to enter IDLE mode, resets the computer to all preferences selected in the Service Menu..
information	**Information Button**	Provides additional information about an option when tapped.
	Pause Button	Pauses music.
	Stop Button	Stops music.

RIDE SUMMARY

1. When the workout has finished, the user's results will appear.
2. Cycle through the summary report by tapping on the various tabs at the top of the screen.

   Note: If no heart rate monitor has been connected, the Heart Rate tab will not appear in the summary.
3. Click Go to home to return to the home screen.

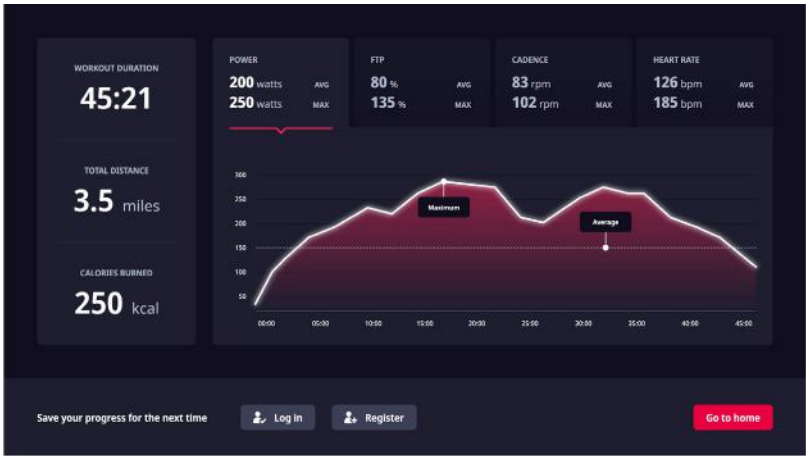

Fig. 39

4. If no action has been taken in 30 seconds (this time can be changed in the settings), a popup will appear prompting the user to go to the home screen or resume the workout.
5. If no action has been taken in 10 seconds, the console will return to the home screen.

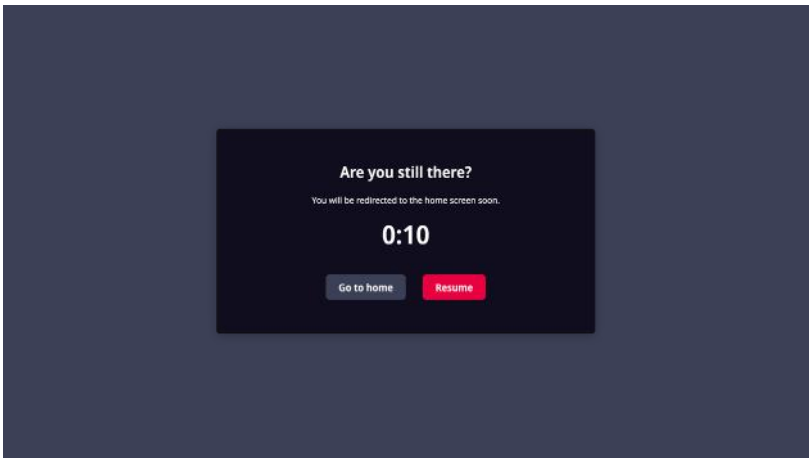

Fig. 40

CONNECTING A DEVICE

Fig. 41

Track and save your workout data by tapping to pair your Apple Watch or Samsung Galaxy Watch on the icon at the bottom right corner of the display.

Connecting Earphones

1. Turn on earphones.
2. Tap the ☰ to open the settings menu.
3. Tap **earbuds** on the settings menu.
4. Tap on the name of your earbuds to select them and press Connect.
5. If connection is successful, the following icon will appear on screen: Earbuds connected.

   Note: If unable to connect earphones, try tapping Search or Retry.
6. To disconnect, Tap ☰ to open the settings menu, and press Disconnect.

Fig. 42

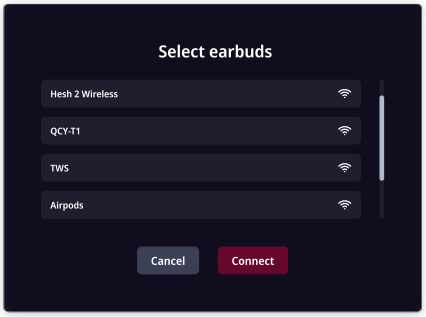

Fig. 43

Connecting a Heart Rate Monitor

1. Turn on HR monitor
2. Tap the ☰ to open the settings menu.
3. Tap **HR monitor** on the settings menu. Console will scan for devices in range.
4. Tap on the name of your HR monitor to select it and press Connect.
5. If connection is successful, the following icon will appear on screen: HR monitor connected.

   Note: If unable to connect HR monitor, try tapping Search or Retry.
6. To disconnect, Tap ☰ to open the settings menu, and press Disconnect.

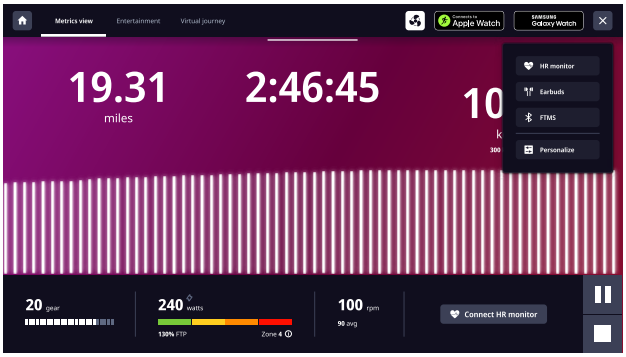

Fig. 44

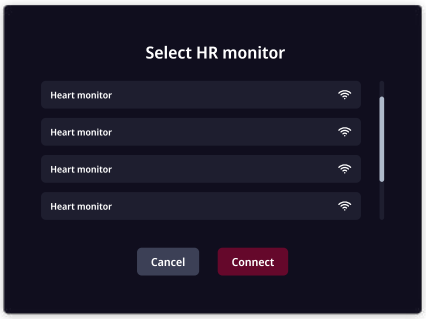

Fig. 45

Connecting an Apple Watch

1. Hold your Apple Watch to the reader on the bottom right of the screen.
2. Connect to the Virtual Bike on your Apple Watch.
3. If connection is successful, the following icon will appear on screen: .

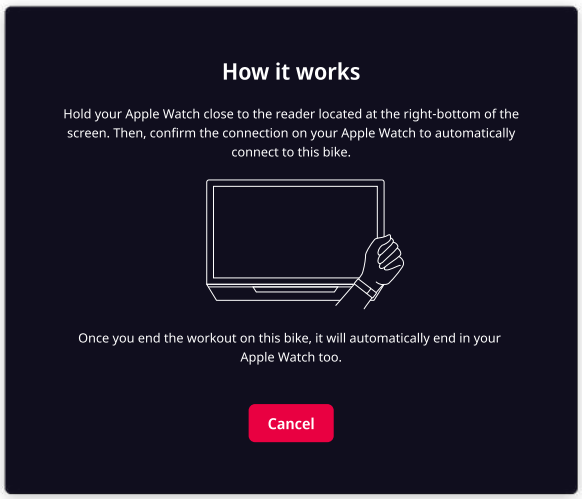

Fig. 46

Connecting a Galaxy Watch

1. Activate NFC on your Galaxy Watch.
2. Hold your Galaxy Watch to the reader on the bottom right of the screen to connect to the Virtual Bike.
3. If connection is successful, the following icon will appear on screen: .

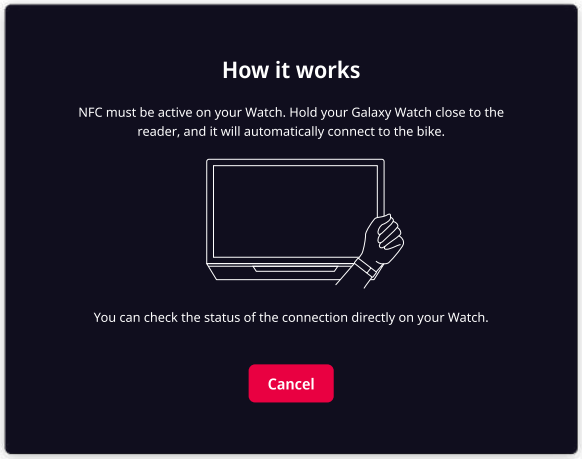

Fig. 47

CONNECTING TO ENTERTAINMENT

Tap the Entertainment menu to open up the entertainment screen. Either plug in headphones or use the Connect button in the upper right to connect bluetooth headphones.

- Tap an app from the main screen to launch it.
- Tap to begin connection instructions.
- Once a program with volume begins tap the in the top bar to open the volume slider to adjust volume.

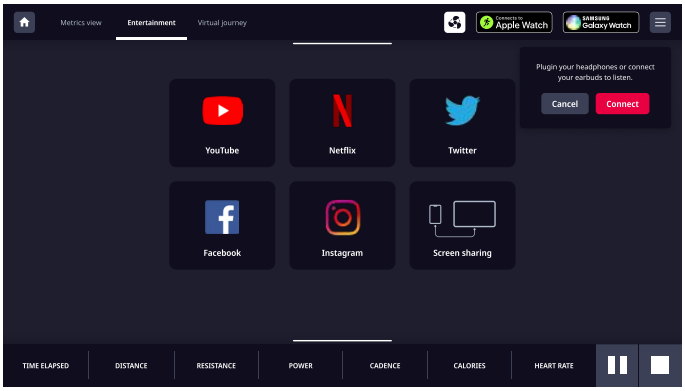

Fig. 48

SCREEN SHARING

1. Use your HDMI cable and adapter to connect your phone to the console. Once connected the screen of your phone will be visible on the console.
   If image appears in portrait mode (Fig. 8) rotate phone or lock screen rotation.
2. Tap Start when correct to begin screen sharing.

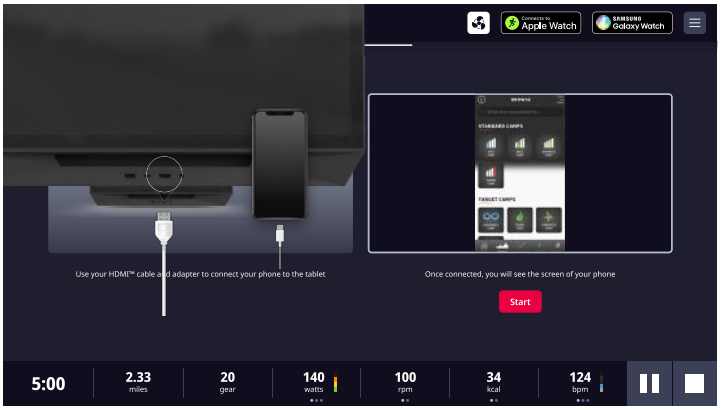

Fig. 49

LOGIN EXPERIENCE

Procedure

1. From the main screen tap the upper left, then right, then left to open the password prompt.
2. Enter password 218 then tap the ✓ button to enter **Maintenance Mode**. (See Fig. 1 on page 1)
3. Tap **Facility** to display the sub-menu.
4. Tap **Login experience**.
5. The Login Experience page will display the options to either enter your login credentials or to request login credentials.

   EGYM provides the service of user accounts. Having this integration will allow riders to have a personalized experience.

   In order to activate this feature, the integration needs to be completed by entering the Client ID and Client Secret that were sent by email. It takes up to 5 days to receive these credentials.

   If you don't have login credentials, or wish to request credentials on a new email tap **Request Credentials**, fill out the form and redo the process when credentials arrive.
6. Enter your Client ID and Client Secret. Tap **Enable**.
7. Console will log in and return to the Login experience maintenance page with a ✓ icon to indicate a successful change.

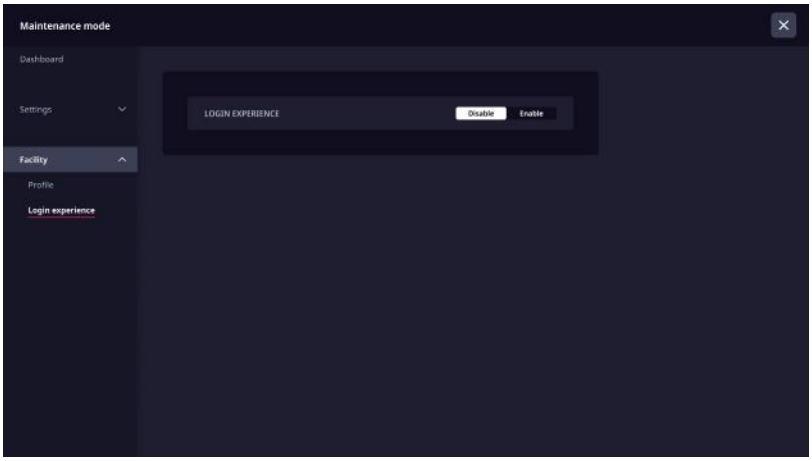

Fig. 50

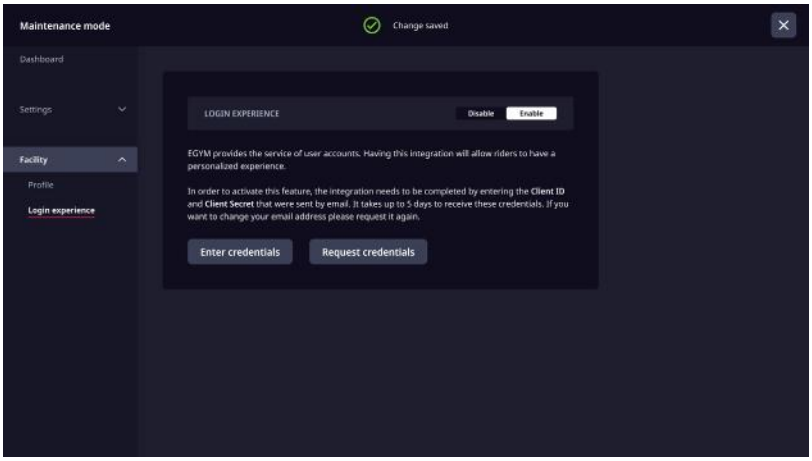

Fig. 51

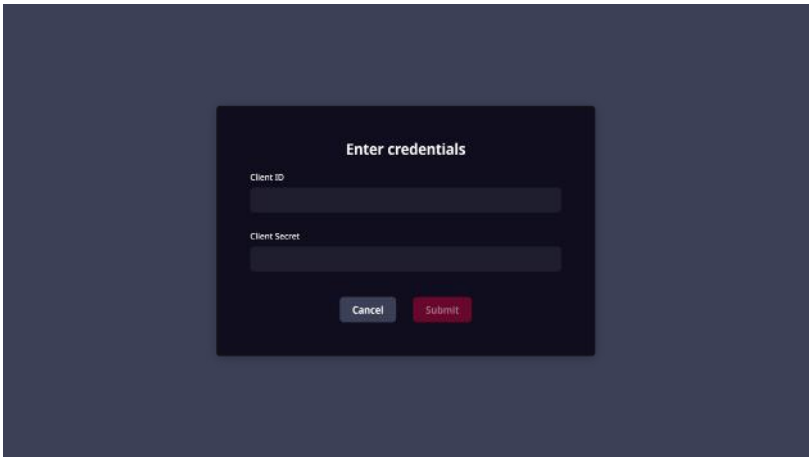

Fig. 52

FCC Warning

1. This device complies with Part 15 of the FCC Rules. Operation is subject to the following two conditions:

(1) This device may not cause harmful interference.

(2) This device must accept any interference received, including interference that may cause undesired operation.

2. Changes or modifications not expressly approved by the party responsible for compliance could void the user's authority to operate the equipment.

NOTE:

This equipment has been tested and found to comply with the limits for a Class B digital device, pursuant to Part 15 of the FCC Rules. These limits are designed to provide reasonable protection against harmful interference in a residential installation.

This equipment generates uses and can radiate radio frequency energy and, if not installed and used in accordance with the instructions, may cause harmful interference to radio communications. However, there is no guarantee that interference will not occur in a particular installation. If this equipment does cause harmful interference to radio or television reception, which can be determined by turning the equipment off and on, the user is encouraged to try to correct the interference by one or more of the following measures:

- Reorient or relocate the receiving antenna.
- Increase the separation between the equipment and receiver.
- Connect the equipment into an outlet on a circuit different from that to which the receiver is connected.
- Consult the dealer or an experienced radio/TV technician for help.

FCC Radiation Exposure Statement:

This equipment complies with FCC radiation exposure limits set forth for an uncontrolled environment. This equipment should be installed and operated with minimum distance 20cm between the radiator& your body.

INDUSTRY CANADA INFORMATION

Industry Canada (IC) Warning:

The device is restricted to indoor use only when operating in 5150 to 5250MHz frequency range.

This device complies with Industry Canada license-exempt RSS standard(s). Operation is subject to the following two conditions: (1) this device may not cause interference, and (2) this device must accept any interference, including interference that may cause undesired operation of the device.

Avertissement d'Industrie Canada (IC):

L'appareil est limité à une utilisation en intérieur uniquement lorsqu'il fonctionne dans la plage de fréquences de 5 150 à 5 250 MHz.

Le présent appareil est conforme aux CNR d'Industrie Canada applicable aux appareils radio exempts de licence. L'exploitation est autorisée aux deux conditions suivantes : (1) l'appareil ne doit pas produire de brouillage, et (2) l'utilisateur de l'appareil doit accepter tout brouillage radioélectrique subi, même si le brouillage est susceptible d'en compromettre le fonctionnement.

IC Radiation Exposure Statement

The device is compliance with RF exposure guidelines, users can obtain Canadian information on RF exposure and compliance.The minimum distance from body to use the device is 20cm.

REMARQUE IMPORTANTE

Déclaration IC d'exposition aux radiations

Le présent appareil est conforme Après examen de ce matériel aux conformité ou aux limites d'intensité de champ RF, les utilisateurs peuvent sur l'exposition aux radiofréquences et la conformité and compliance d'acquérir les informations correspondantes. La distance minimale du corps à utiliser le dispositif est de 20cm.

EU Regulatory Information

Frequency Range:
Bluetooth/BLE: 2402-2480MHz
2.4G Wi-Fi: 2412-2472MHz/2422-2462MHz
5G Wi-Fi: 5150-5250 MHz, 5725-5850MHz
NFC: 13.56MHz
RF-Output Power :
Bluetooth: 9.66dBm; BLE: 7.12dBm
2.4G Wi-Fi: 17.75dBm
5G Wi-Fi:
5150-5250MHz: 12.39dBm
5725-5850MHz: 13.84dBm
NFC: 23.94dBuA/m @ 3m

BE	BG	CZ	DK	DE	EE	IE	EL
ES	FR	HR	IT	CY	LV	LT	LU
HU	MT	NL	AT	PL	PT	RO	SI
SK	FI	SE	NO	IS	LI	CH	TR

In all EU member states, operation of 5150-5250 MHz is restricted to indoor use only.

MAINTENANCE MODE

Maintenance Mode allows access to service and diagnostic information, as well as provides the ability to adjust certain program default parameters. To enter Maintenance Mode:

Fig. 53

8. From the main screen tap the upper left (A) then right (B), then left (A) to open the password prompt.

9. Enter password 218 then tap the ✓ button.

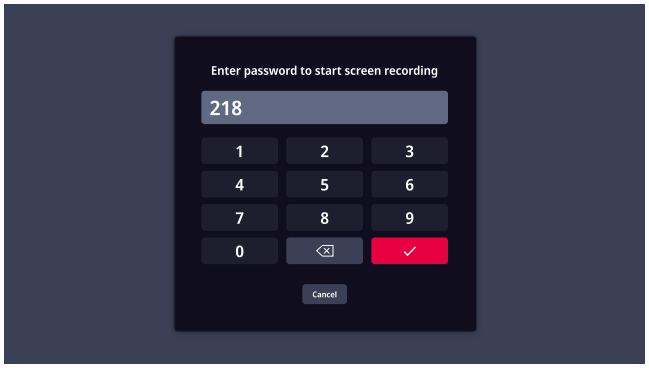

Fig. 54

10. Console will display summary screen. Tap Reset statistics to erase all or tap > by an option to view and erase.

11. If offline (Fig. 55), tap the date to change the console date and time.

12. Tap ✕ in the upper right to exit Maintenance Mode.

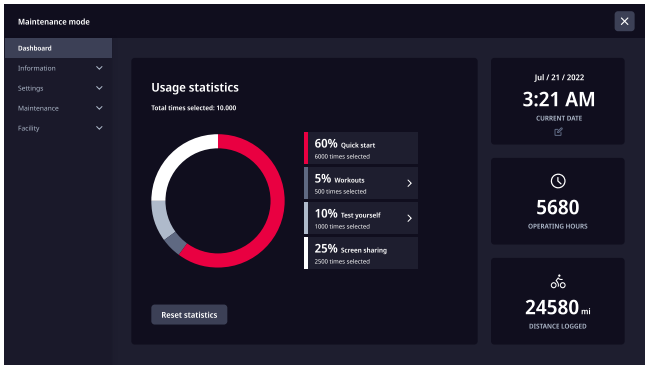

Fig. 55 Clock only shown in offline mode

ACCESSING CONSOLE INFO

1. From the main screen tap the upper left, then right, then left to open the password prompt. (See Fig. 53 on page 35)
2. Enter password 218 then tap the ✓ button to enter **Maintenance Mode**. (See Fig. 54 on page 35)
3. Tap **Information** to display the sub-menu and bike information.
4. Tap the ✎ to assign an alias (name) to the unit.
5. Tap the Check for updates button while online to check for available software updates. If available, tap Restart to apply updates.
6. Tap ✕ in the upper right to exit Maintenance Mode.

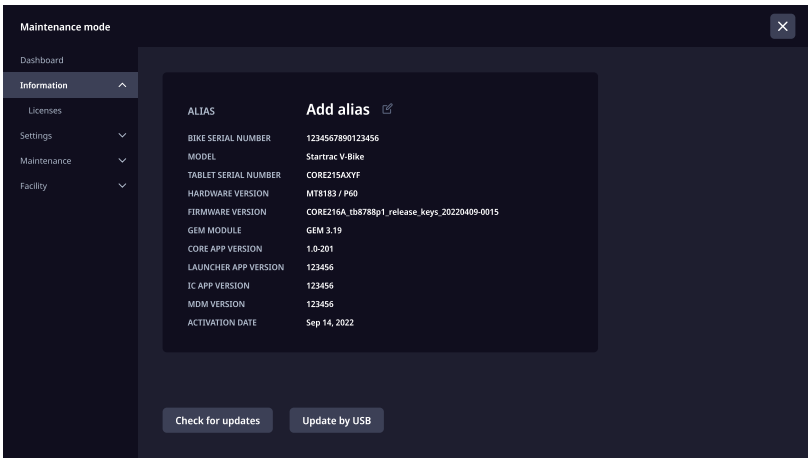

Fig. 56

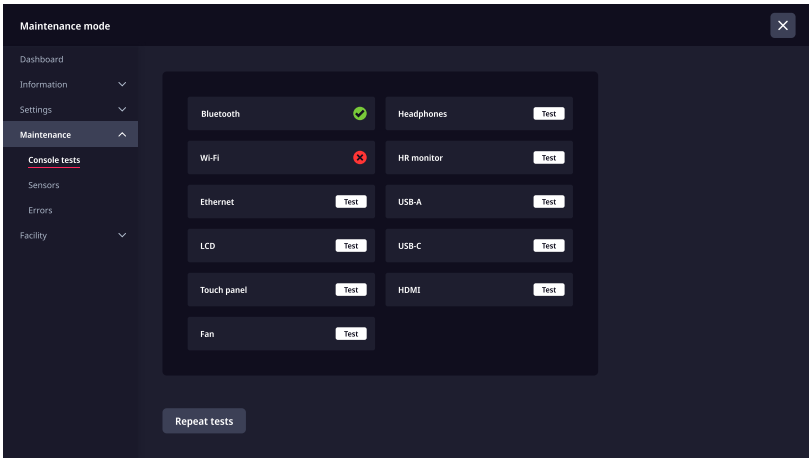

Fig. 57

Updating Software with a USB Stick

If directed by service, download the latest software version from https://service.corehandf.com/software and save it in an empty USB in the root folder. Then plug the USB drive to start.

1. From the main screen tap the upper left, then right, then left to open the password prompt.
2. Enter password 218 then tap the ✓ button to enter **Maintenance Mode**. (See Fig. 1 on page 1)
3. Tap **Information** to display the sub-menu and bike information.
4. Tap the Update by USB button then tap Restart to apply updates.

Updating GEM Software

1. From the main screen tap the upper left, then right, then left to open the password prompt.
2. Enter password 218 then tap the ✓ button to enter **Maintenance Mode**. (See Fig. 1 on page 1)
3. Tap **Information** to display the sub-menu and bike information.
4. Tap the Check for GEM FW update button then follow the on-screen directions to update GEM Software with the Configurez App.
5. Once app confirms download, the console will be restarted automatically to apply updates.

ACCESSING CONNECTIVITY

1. From the main screen tap the upper left, then right, then left to open the password prompt. (See Fig. 53 on page 35)
2. Enter password 218 then tap the ✓ button to enter **Maintenance Mode**. (See Fig. 54 on page 35)
3. Tap **Settings** to display the sub-menu (Fig. 58).
4. Tap **Connectivity**.

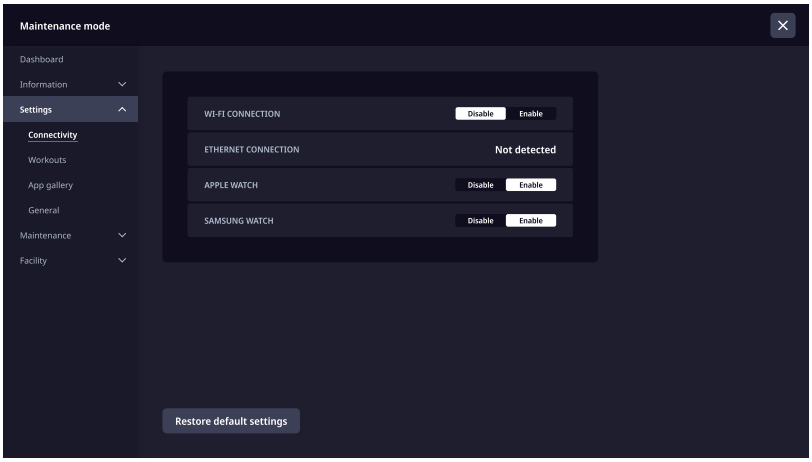

Fig. 58 Shown with Wi-Fi disabled and no Ethernet connection

Connecting to Wi-Fi

1. From the Connectivity sub-menu tap Enable on Wi-Fi Connection to enable Wi-Fi or reset Wi-Fi connection. Button will illuminate. (Fig. 59)
2. Tap Search to connect to a new Wi-Fi network. Searching screen will display.
3. Select desired network from selection screen then tap Connect.
4. Enter Wi-Fi password provided by network operator on the next screen with pop-up keyboard, then tap Connect. Correct password will connect with a ✓ at the top of the screen. If password is incorrect, try again or tap Go back to select a different network.
5. Connected network will appear on Connectivity sub-menu. Tap to see details or to disconnect console from network.

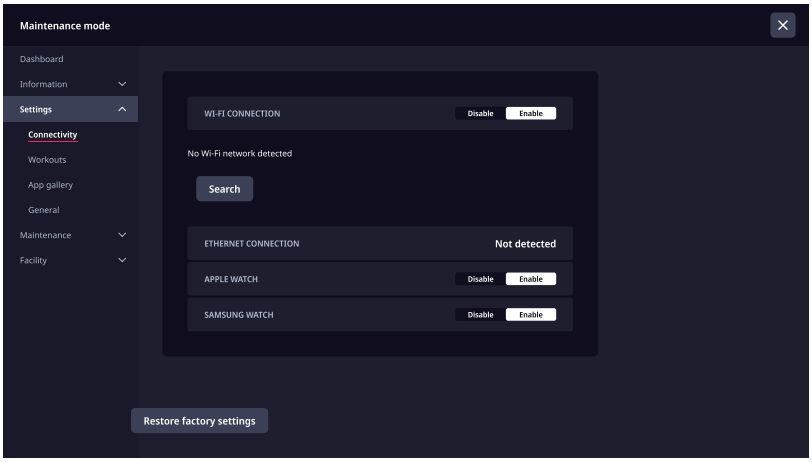

Fig. 59 Shown with Wi-Fi disabled and no Ethernet connection

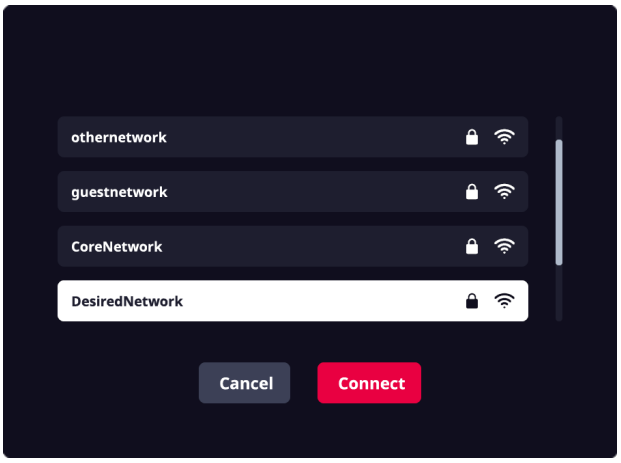

Fig. 60