BH-01 Table lamp

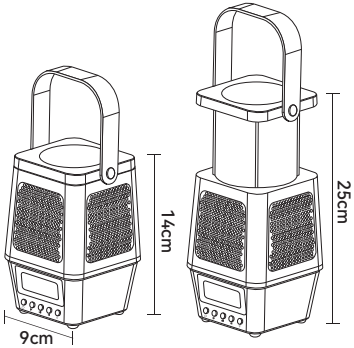

Specifications:

Input voltage: 5V/2A
Battery capacity: 3600mAh
Charging port: Type-C
Light color: 2700K/4500K/6000K
Bluetooth name: Lucky always

Product Function:

1. Adjustable light: 3 color temperature and 7 levels of dimming
2. Bluetooth supported: connect playback devices
3. Time display: 12/24 hour display, can be automatically calibrated via bluetooth
4. Alarm clock: 3 choices for Monday to Friday, Saturday to Sunday, Monday to Sunday
5. Retractable lamp: flexible lamp size and light brightness for various use

Packing List:

Lamp x1 USB Cable x1 Instruction x1

FCC Statement

This equipment has been tested and found to comply with the limits for a Class B digital device, pursuant to part 15 of the FCC Rules. These limits are designed to provide reasonable protection against harmful interference in a residential installation. This equipment generates, uses and can radiate radio frequency energy and, if not installed and used in accordance with the instructions, may cause harmful interference to radio communications. However, there is no guarantee that interference will not occur in a particular installation. If this equipment does cause harmful interference to radio or television reception, which can be determined by turning the equipment off and on, the user is encouraged to try to correct the interference by one or more of the following measures:
Reorient or relocate the receiving antenna.
Increase the separation between the equipment and receiver.
Connect the equipment into an outlet on a circuit different from that to which the receiver is connected.

Consult the dealer or an experienced radio/TV technician for help.
Caution: Any changes or modifications to this device not explicitly approved by manufacturer could void your authority to operate this equipment.
This device complies with part 15 of the FCC Rules. Operation is subject to the following two conditions:
(1) This device may not cause harmful interference, and
(2) this device must accept any interference received, including interference that may cause undesired operation.

RF Exposure Information
The device has been evaluated to meet general RF exposure requirement. The device can be used in portable exposure condition without restriction.

Clock Setting

⋆Manual: In the off screen state, press ⏻ once to activate the screen and enter the time mode. Hold on to press ⏻ to set time, press ⏮ to adjust "h", press ⏭ to adjust "m", then press ⏻ again to choose"day", finally press ⏻ to save.

⋆Auto: Time will be automatically synchronized when bluetooth connected(PS: Time automatically updates with iOS system; Time can be only updated after information authorized with Android system)

12/24-hour Clock

⋆On time mode, press ⏮ to switch 12/24-hour clock.

⋆12-hour clock, the white dot will display on the top left corner, the upper white dot means AM, the lower white dot means PM.

Bluetooth Setting

⋆In the off screen state, press ⏻ twice to enter Bluetooth mode, the blue dot will flash on the top right corner waiting to be connected,connect"Lucky always"to play music, press ⏮ and ⏭ to play last and next song.

⋆On Bluetooth mode, press ⏻ to exit, the blue dot will be off.

Alarm Clock Setting

⋆Hold on to press ⏯ to enter mode, then press ⏮ to adjust "h", press ⏭ to adjust "m", then press ⏯ again to choose day, and press ⏯ to choose"1-5 / 6-7/ 1-7", finally press ⏯ to save.

⋆Press ⏯ to turn off when alarm rings.

Activate Alarm Clock

⋆When alarm clock time setting successfully, press ⏯ to activate alarm clock, the red dot will display on the left lower corner; Press ⏯ again to deactivate alarm clock.

Screen Brightness Setting

⋆Press ⏭ to adjust screen brightness, you can also press ⏻ three times to turn off the screen completely.

Warm Tips

⋆Before you set clock and alarm clock, pls press ⏻ to exit bluetooth mode.

⋆When the battery run out, the lamp will factory reset, pls set again.

⋆Any questions about the lamp or manual, pls contact us, we will surely help with videos and more details.