Small Size 2.4 GHz PCB antenna

By Audun Andersen

1 KEYWORDS

- *CC25xx*
- *CC24xx*
- *CC2480*
- *PCB antenna*
- *USB dongle*
- *2.4 GHz*
- *Inverted F Antenna*

2 INTRODUCTION

The PCB antenna used on the CC2511 USB dongle reference design is described in this application note. Even if the antenna presented is for a USB dongle design it can be used in all 2.4 GHz designs, especially where small space is required for the antenna.

This application note describes the antenna dimensions, the RF performance and considerations for complying with regulatory limits when using this design.

The suggested antenna design requires no more than 15.2 x 5.7 mm of space and ensures a VSWR ratio of less than 2 across the 2.4 GHz ISM band when connected to a 50 ohm source.

试用水印

Table of Contents

1 KEYWORDS 1
2 INTRODUCTION 1
3 ABBREVIATIONS 2
4 ANTENNA DESIGN 3
4.1 DESIGN GOALS 3
4.2 SIMULATION 3
4.3 LAYOUT AND IMPLEMENTATION 4
5 TEST RESULTS 5
5.1 REFLECTION 5
5.2 RADIATION PATTERN 7
5.3 OUTPUT POWER 15
5.4 SPURIOUS EMISSION AND HARMONICS 17
6 CONCLUSION 20
7 GENERAL INFORMATION 21
7.1 DOCUMENT HISTORY 21

3 ABBREVIATIONS

CAD	Computer Aided Design
CC24xx	CC2400, CC2420, CC2430 and CC2431
CC25xx	CC2500, CC2510, CC2511, CC2550 and CC2520
CC2480	Z-Accel ZigBee Processor
IFA	Inverted F Antenna
ISM	Industrial, Scientific and Medical
LOS	Line Of Sight
PCB	Printed Circuit Board
PER	Packet Error Rate
VSWR	Voltage Standing Wave Ratio

试用水印

4 ANTENNA DESIGN

The PCB antenna on the CC2511 USB dongle reference design is a meandered Inverted F Antenna (IFA). The IFA was designed to match an impedance of 50 ohm at 2.45 GHz. Thus no additional matching components are necessary.

4.1 Design Goals

The reflection at the feed point of the antenna determines how much of the applied power is delivered to the antenna. A reflection of less than -10 dB across the 2.4 GHz ISM band, when connected to a 50 ohm source, was a design goal. Reflection of less than -10 dB, or VSWR less than 2, ensures that more than 90% of the available power is delivered to the antenna. Bandwidth is in this document defined as the frequency band where more than 90% of the available power is delivered to the antenna. Another design goal was to fit the size of the PCB antenna on a USB dongle and to obtain good performance also when the dongle is connected to a computer.

4.2 Simulation

IE3D from Zeland, which is an electromagnetic simulation tool, was used to design the antenna. The accuracy of the simulation is controlled by the mesh. An increase of the mesh increases the simulation time. Thus, for initial simulations mesh = 1 should be used. When a fairly good result is achieved a higher mesh should be used to obtain more accurate results. Comparison of simulation and measurement results shows that the measured reflection is between the result obtained with mesh = 5 and mesh = 1; see Figure 2 for details.

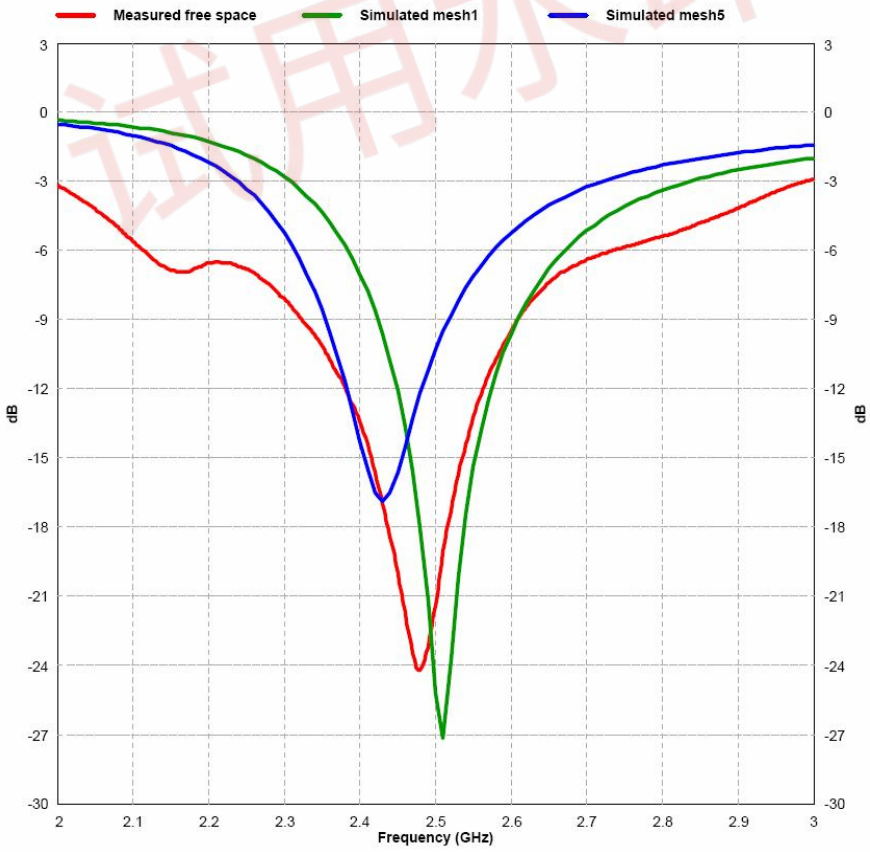

Figure 2: Comparison of Simulation and Measurements Results

4.3 Layout and Implementation

Small changes of the antenna dimensions may have large impact on the performance. Therefore it is strongly recommended to make an exact copy of the reference design to achieve optimum performance. The easiest way to implement the antenna is to import the gerber or DXF file showing the antenna layout. These files are named IFA_USB.spl and IFA_USB.dxf respectively and are included in the CC2511 USB dongle reference design available from http://www.ti.com\lpw. The imported file can be used as a template when drawing the antenna. By using this procedure it should be possible to make an exact copy. If the PCB CAD tool being used does not support import of DXF or gerber files, Figure 3 and Table 1 should be used to ensure correct implementation. It is recommended to generate a gerber file for comparison with IFA_USB.spl when making a manual implementation. Most gerber viewers have the possibility to import several gerber files at the same time. Thus by placing the gerber file, showing the manually implemented antenna, on top of IFA_USB.spl it is easy to verify that the antenna is correctly implemented. It is also recommended to use the same thickness and type of PCB material as used in the reference design. Information about the PCB can be found in a separate readme file included in the reference design. To compensate for a thicker/thinner PCB the antenna could be made slightly shorter/longer.

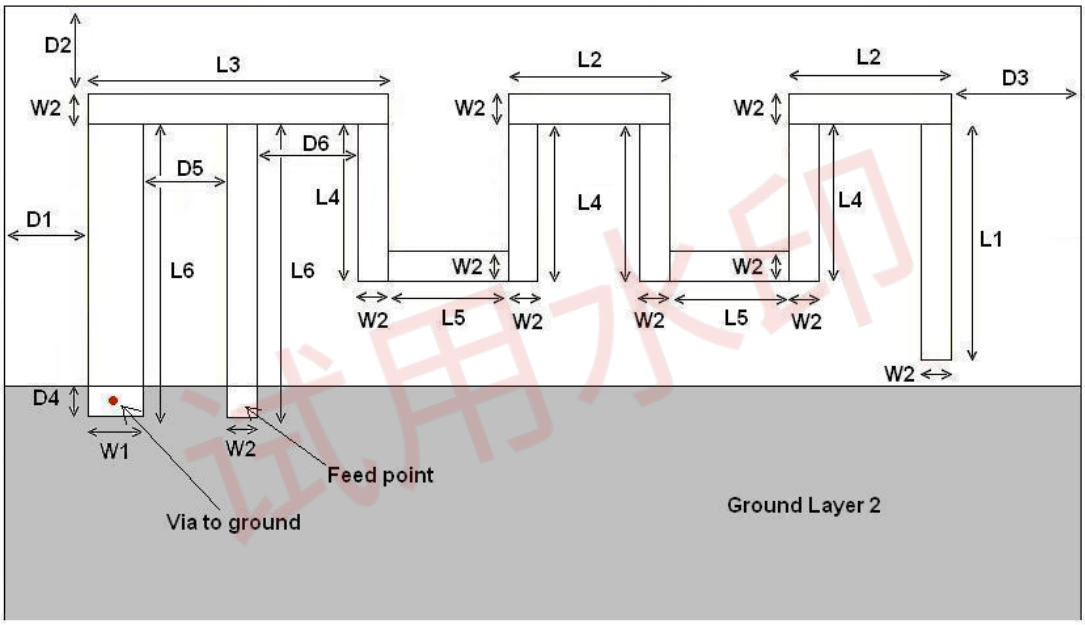

Figure 3: Antenna Dimensions

L1	3.94 mm
L2	2.70 mm
L3	5.00 mm
L4	2.64 mm
L5	2.00 mm
L6	4.90 mm
W1	0.90 mm
W2	0.50 mm
D1	0.50 mm
D2	0.30 mm
D3	0.30 mm
D4	0.50 mm
D5	1.40mm
D6	1.70 mm

Table 1: Antenna Dimensions

5 TEST RESULTS

Reflection, radiation pattern and variation of output power across a wide frequency band were measured to verify the performance of the PCB antenna. Measurements of the dongle in free space and when connected to a laptop were performed to verify that the antenna is suitable both for USB dongle designs and in a standalone application. Free space is in this document interpreted as a measurement performed without connecting the dongle to a computer. In such a measurement the dongle is only powered by a battery.

5.1 Reflection

All the reflection measurements were performed with a network analyzer connected to a semi-rigid coax cable, which was soldered to the feed point of the antenna. Because of the small size antenna and the small ground plane this kind of measurements is heavily affected by the presence and placement of the coax cable. This influence can result in a small uncertainty in resonance frequency and measured reflection. Typically different placement of the semi-rigid coax cable could change the resonance frequency with 5 -10 MHz and the reflection with 3 - 4 dB.

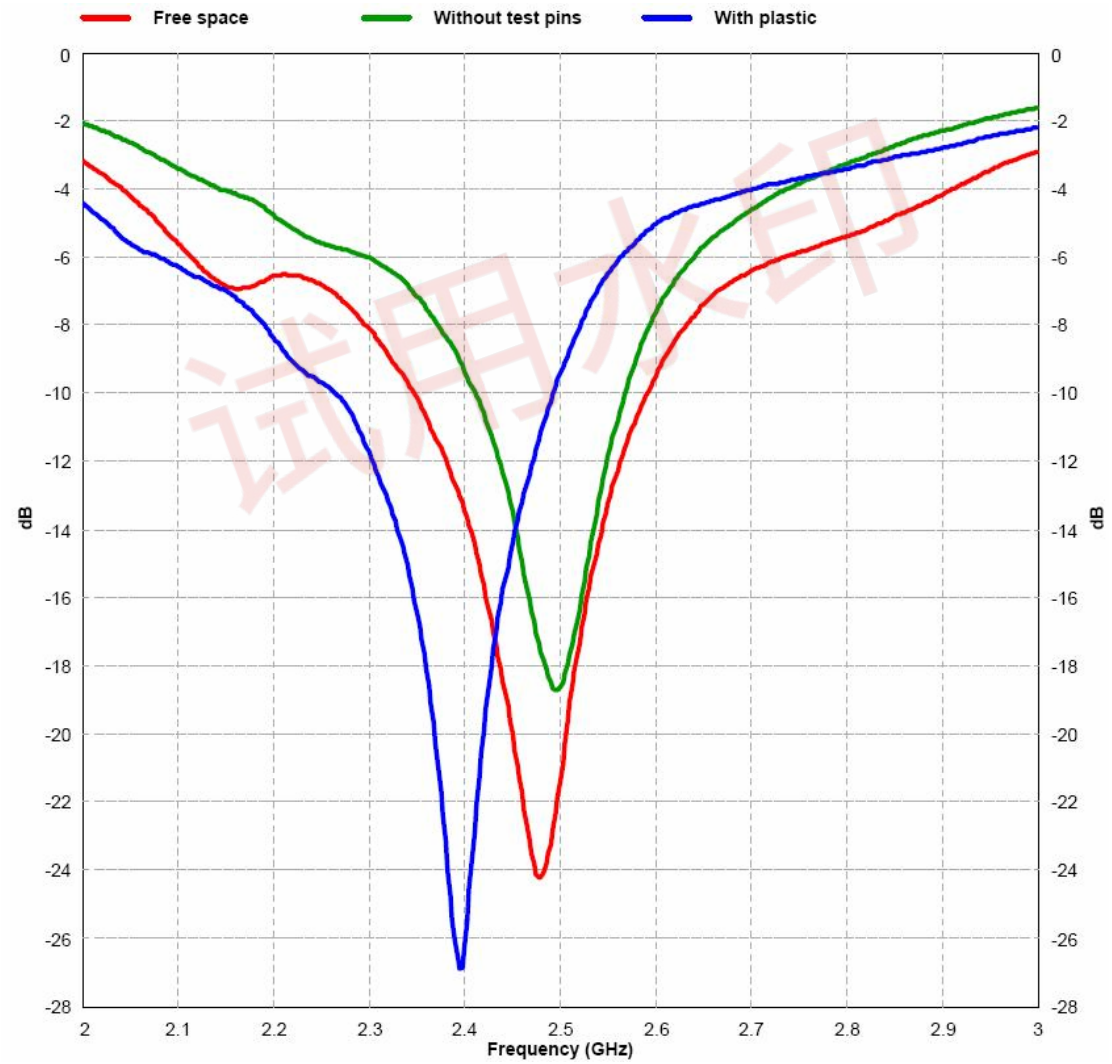

Figure 4: Influence of Plastic Encapsulation and Test Pins

A small part on the CC2511 USB dongle PCB is equipped with test pins. These are intended for use during development. This part of the PCB will typically be omitted in a final application. The red and green graph on Figure 4 shows that removing this part of the PCB has a small impact on the performance. Figure 4 also shows that plastic encapsulation of the dongle will shift the resonance frequency to a lower frequency. This can be compensated by making the antenna slightly shorter.

The size of the ground plane affects the performance of the PCB antenna. Connecting the USB dongle to a computer increases the size of the ground plane and thus the performance is affected. Figure 5 shows how the performance is affected when the USB dongle is connected to a laptop. In free space the antenna has a bandwidth of approximately 250 MHz. When the USB dongle is connected to the laptop the bandwidth is reduced to around 100 MHz, which still is enough to cover the whole 2.4 GHz ISM band.

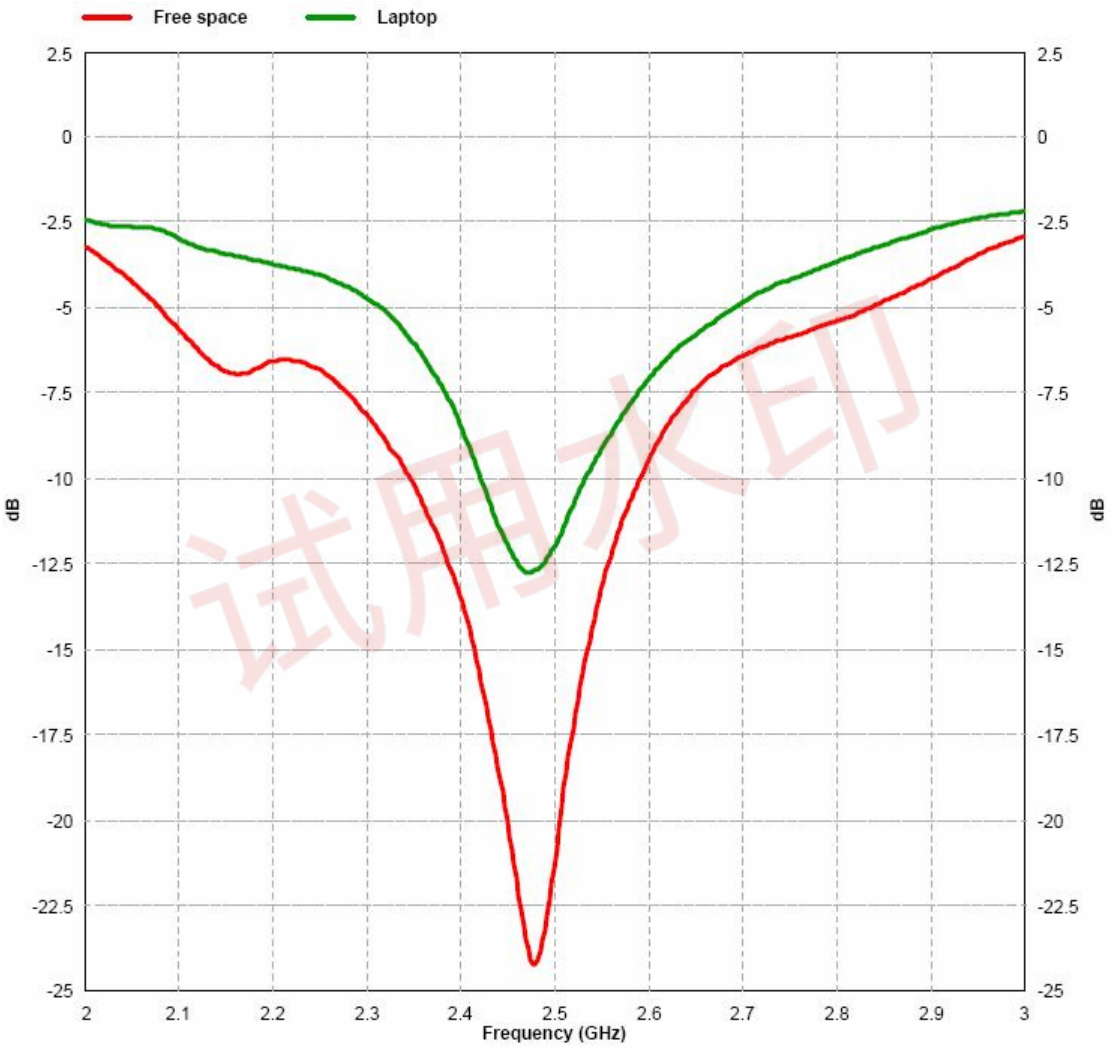

Figure 5: Comparison of Performance

5.2 Radiation Pattern

The radiation pattern for the antenna implemented on the CC2511 USB dongle reference design has been measured in an anechoic chamber. Figure 7 through Figure 12 shows radiation patterns for three planes, XY, XZ and YZ, measured with vertical and horizontal polarization. All these measurement were performed without connecting the dongle to a computer. Figure 13 and Figure 14 shows the radiation pattern when the dongle is connected to a laptop. All measurements were performed with 0 dBm output power. Figure 6 shows how the different radiation patters are related to the positioning of the antenna.

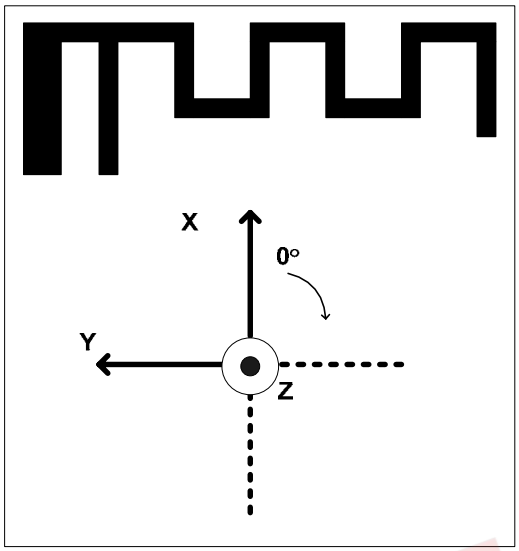

XY plane

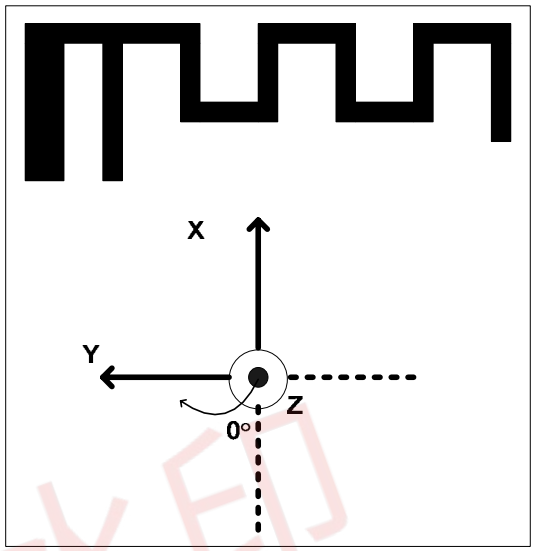

YZ plane

试用水印

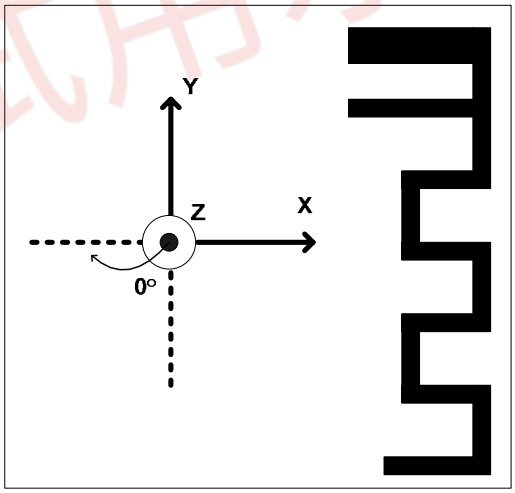

XZ plane

Figure 6: How to Relate the Antenna to the Radiation Patterns

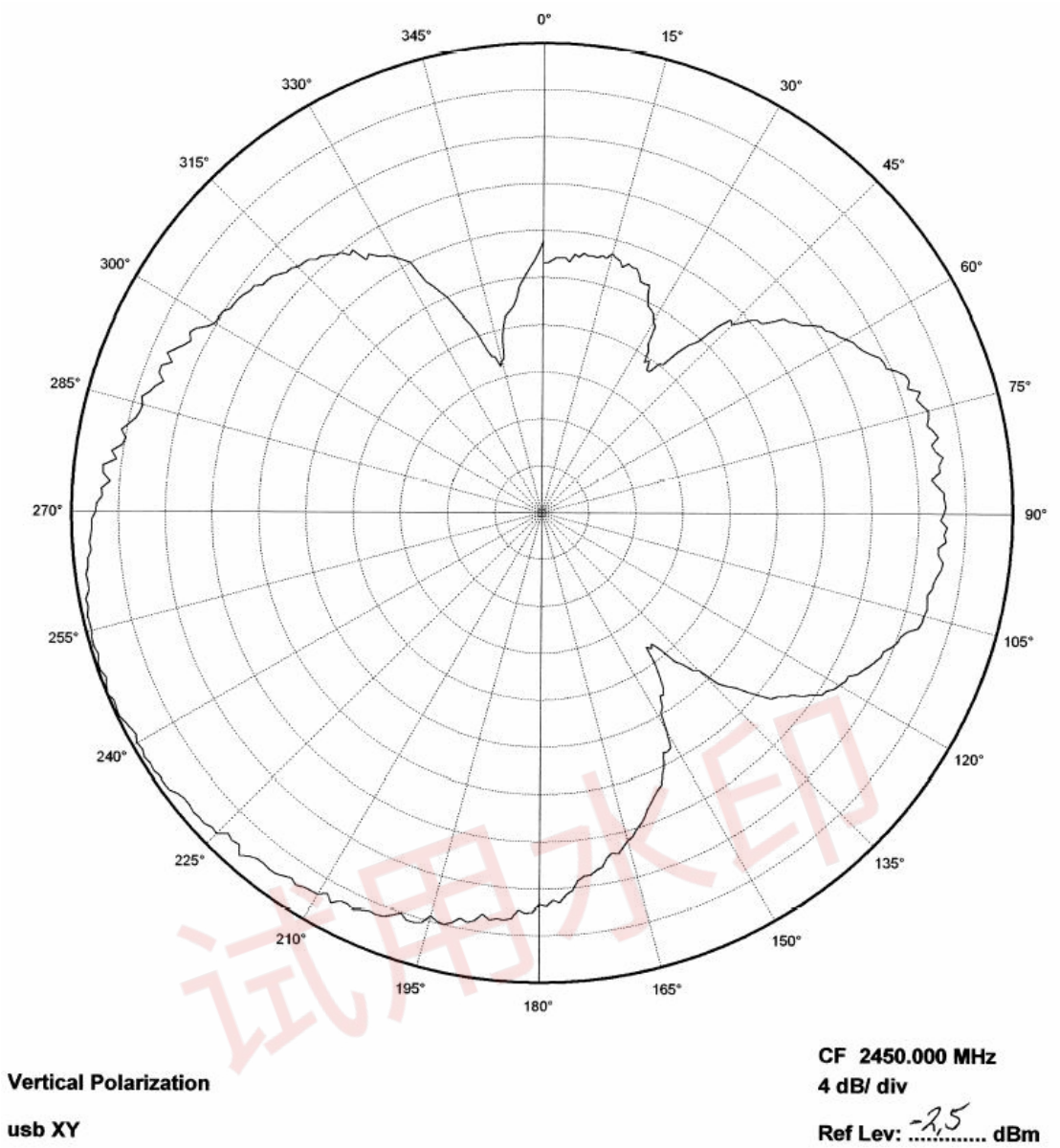

Figure 7: USB Dongle XY Plane

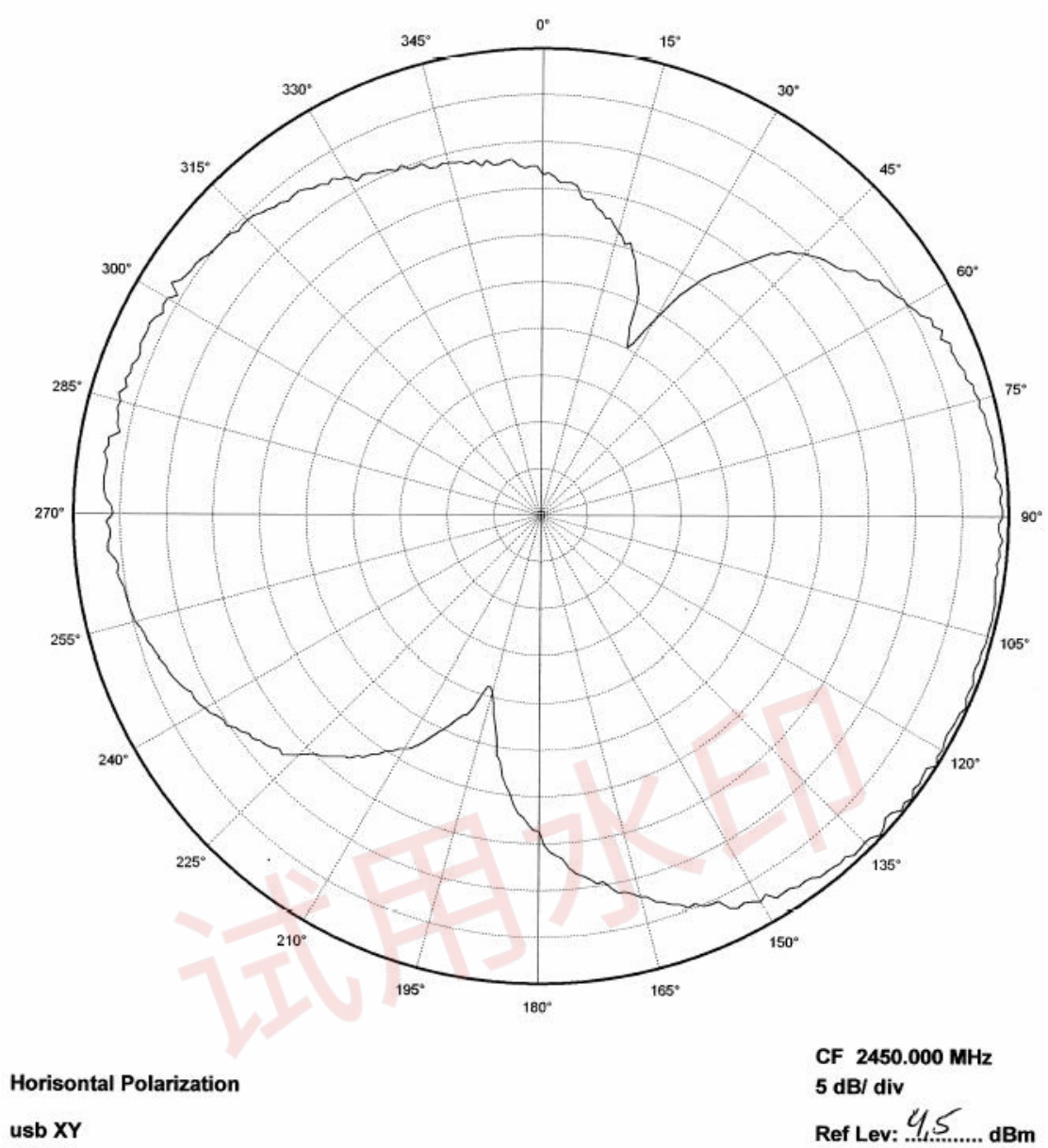

Figure 8: USB Dongle XY Plane

试用水印

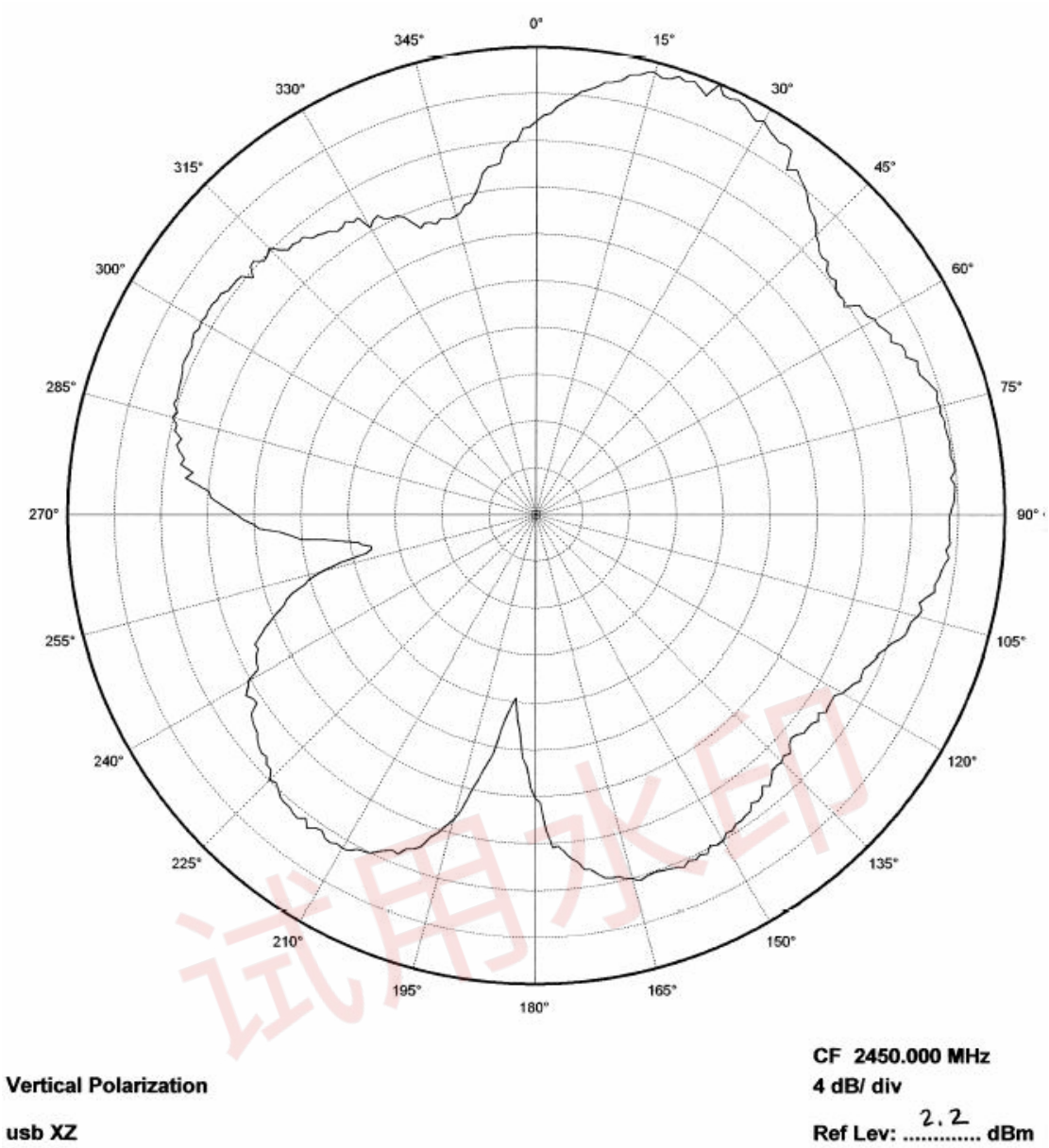

Figure 9: USB Dongle XZ Plane

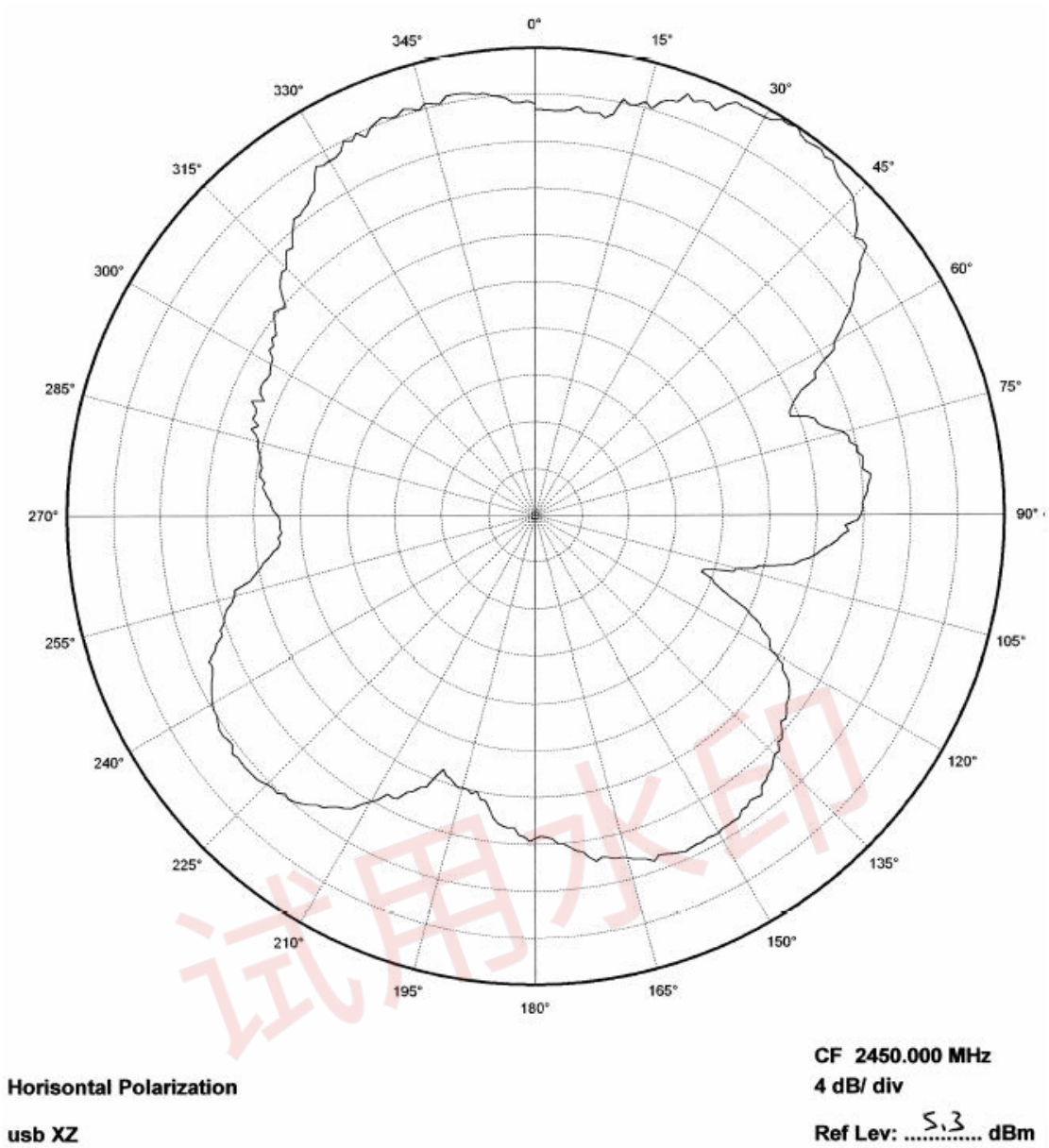

Figure 10: USB Dongle XZ Plane

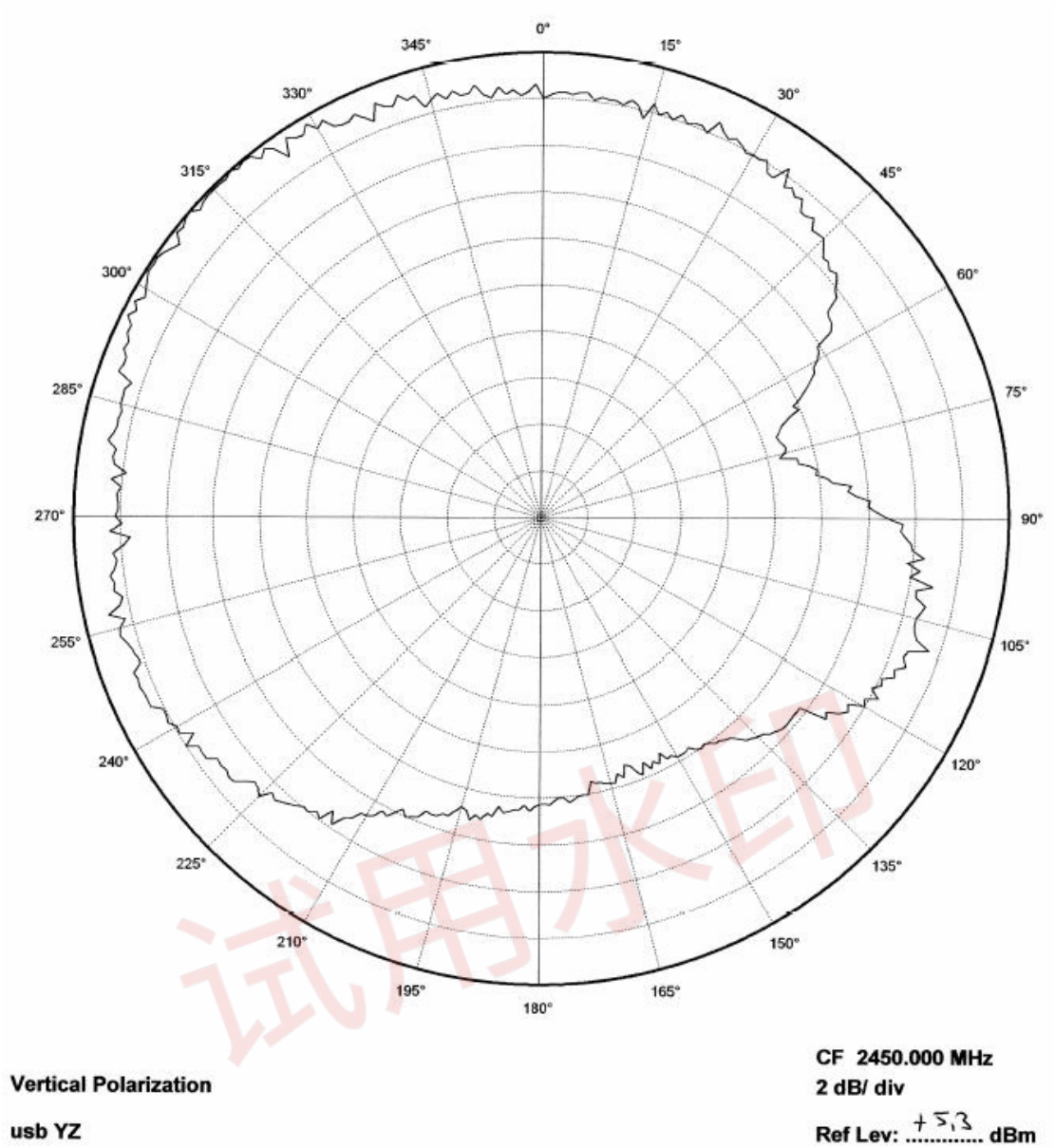

Figure 11: USB Dongle YZ Plane

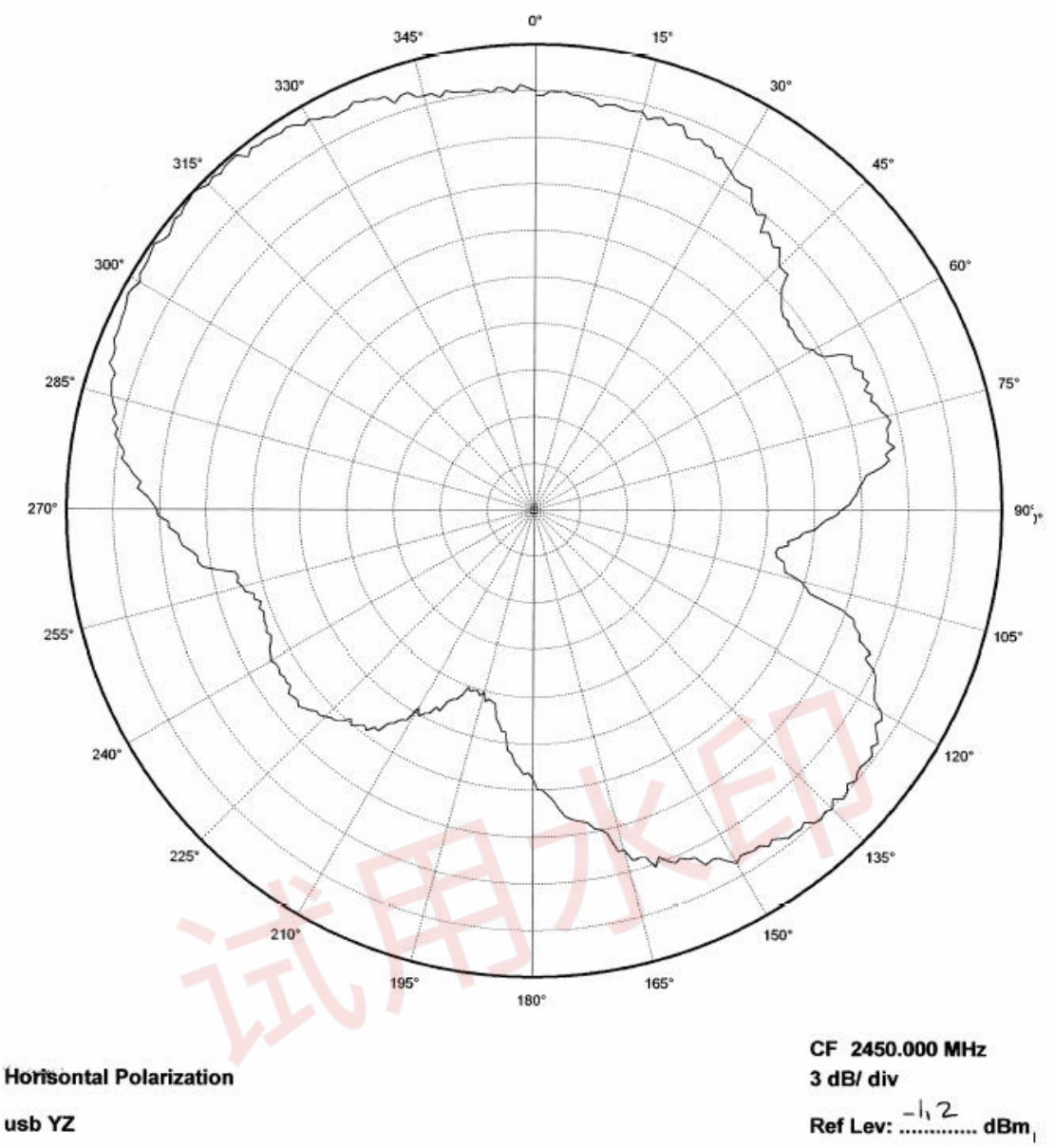

Figure 12: USB Dongle YZ Plane

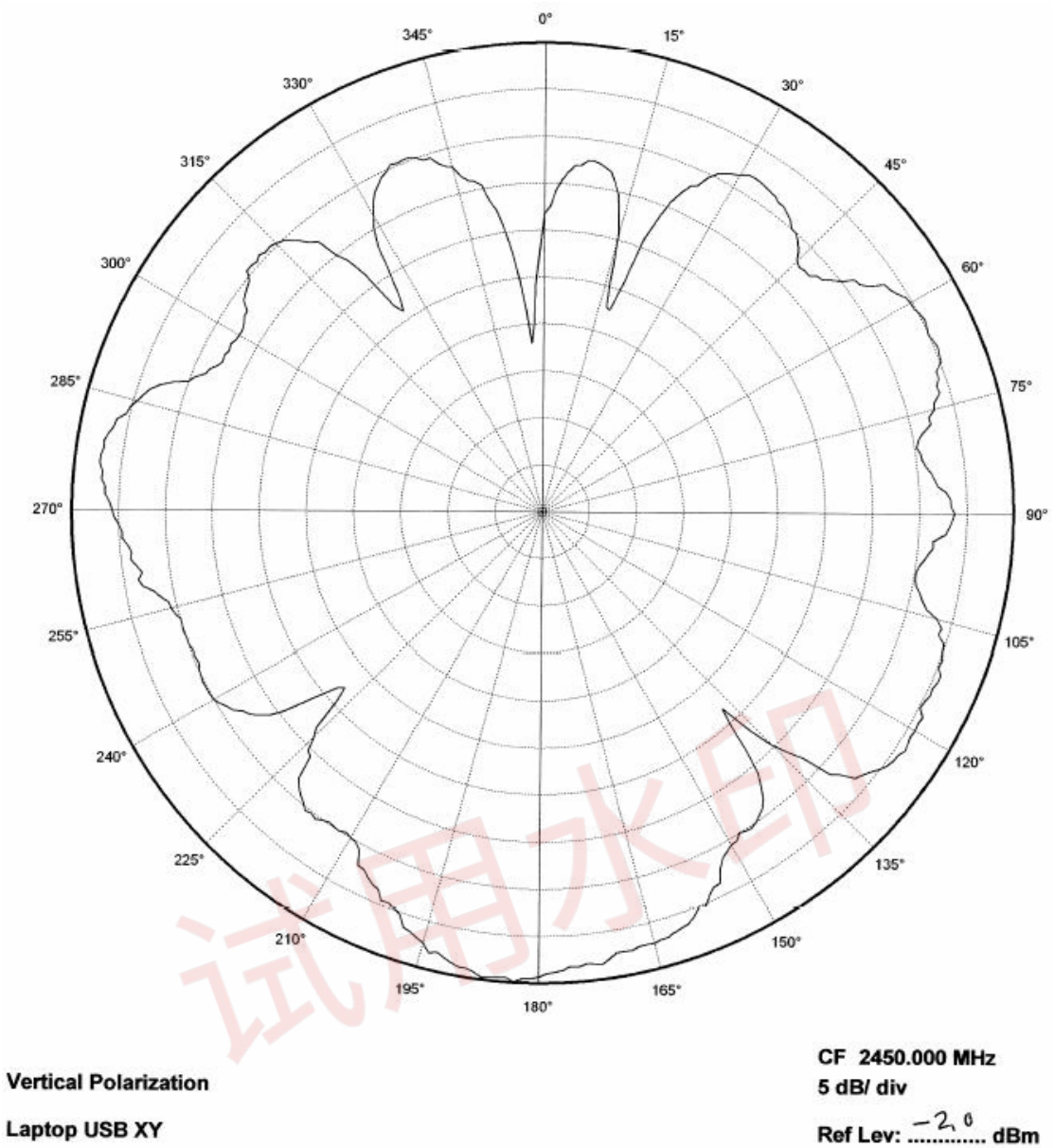

Figure 13: USB Dongle in Laptop XY Plane

试用水印

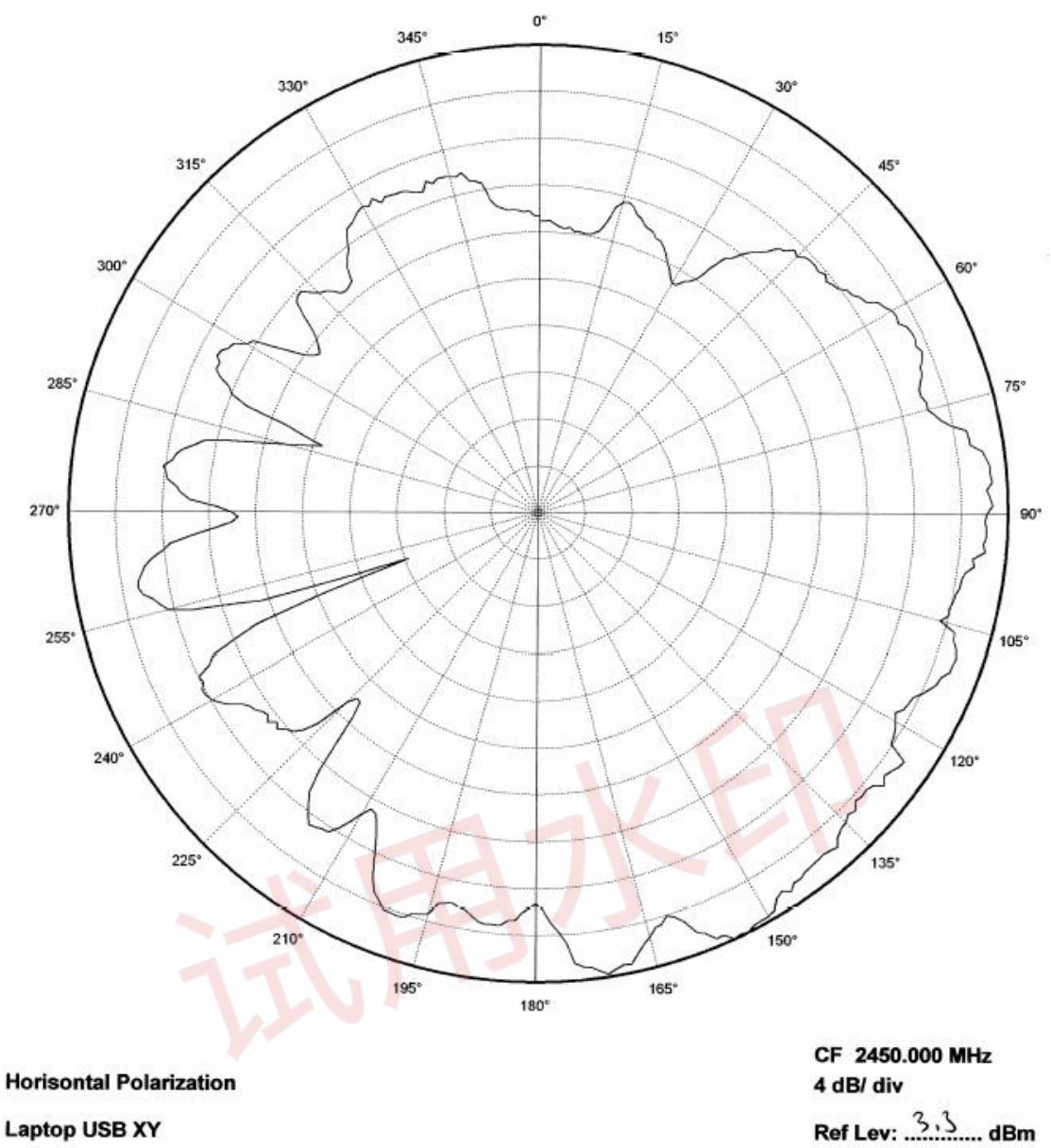

Figure 14: USB Dongle in Laptop XY Plane

5.3 Output Power

To make a realistic bandwidth measurement of the antenna a small test program was used. The test program stepped the center frequency of a carrier from 2.3 to 2.8 GHz. This bandwidth measurement was also done to verify the result from the reflection measurements, described in section 5.1. The output power was measured using max hold on a spectrum analyzer. CC2511 was programmed for 0 dBm output power and the antenna was horizontally oriented and directed towards the receiving antenna. This corresponds to 0° in the XY plane on Figure 6. The bandwidth measurements were not performed with a correction factor on the spectrum analyzer. Thus, the results in Figure 15 and Figure 16 only show the relative changes in output power and not the actual level.

Figure 15 shows the bandwidth of the antenna when the dongle is not connected to a computer. The result shows that the antenna has a variation in output power of less than 3 dB across a frequency band of more than 350 MHz. This demonstrates that the antenna has a

broadband characteristic. Maximum output power is measured to be at 2.54 GHz. Thus if the same antenna is implemented on a PCB with similar size and if the application is only intended for stand alone usage the antenna could be made slightly longer to obtain best performance at 2.42 GHz.

Figure 15: Output Power, USB Dongle

The reflection results in Figure 5 indicate that the output power will be slightly reduced when the dongle is connected to a laptop. Comparison of the results in Figure 15 and Figure 16 shows that the output power is reduced by approximately 2 dB when the dongle is connected to a laptop. This agrees with the results in Figure 5.

Figure 16: Output Power, USB Dongle in Laptop

5.4 Spurious Emission and Harmonics

Table 2 shows measured output power and emission at the second harmonic. Above the second harmonic no peaks were detected when measuring TX emission. This can be seen from Figure 17 and Figure 18. These measurements were performed according to FCC requirements. An approximate conversion to dBm can be done by subtracting 95 from the measured value in dBµV/m. Since the measurement setup for ETSI and FCC is different this conversion will not give an exact result, but typically it will give a result that is within 1-2 dB of the result from a correct ETSI measurement.

Output power	2.44 GHz	4.88 GHz
1 dBm	96.9 dBµV/m	56.1 dBµV/m
0 dBm	96.1 dBµV/m	54.3 dBµV/m
-2 dBm	93.1 dBµV/m	52.5 dBµV/m

Table 2: Measured Level of Output Power and Harmonics

ETSI and FCC limits for output power and TX spurious emission are shown in Table 3. FCC allows for up to 20 dB higher emission if duty cycling is used. Thus, it is possible to use the antenna described in this document and be compliant with both ETSI and FCC regulation.

试用水印

	EN 300 328	EN 300 440	FCC 15.247	FCC 15.249
2.4 – 2.483 GHz	20 dBm	10 dBm*	125 dBμV/m 116 dBμV/m**	94 dBμV/m
2. harm	-30 dBm	-30 dBm	54 dBμV/m	54 dBμV/m

*Depends on the power class.
** Depends on the number of channels being used.

Table 3: ETSI and FCC Limits

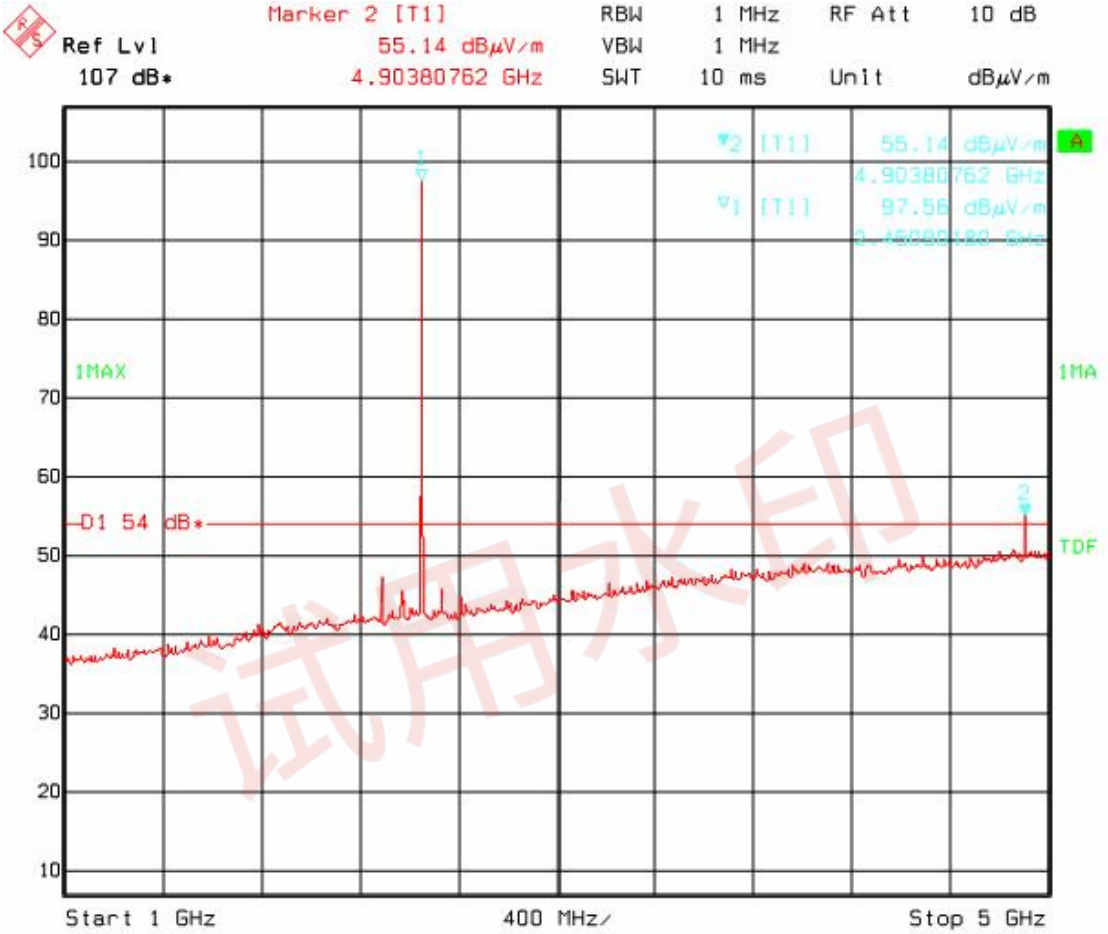

Figure 17: TX Spurious Emission 1 – 5 GHz

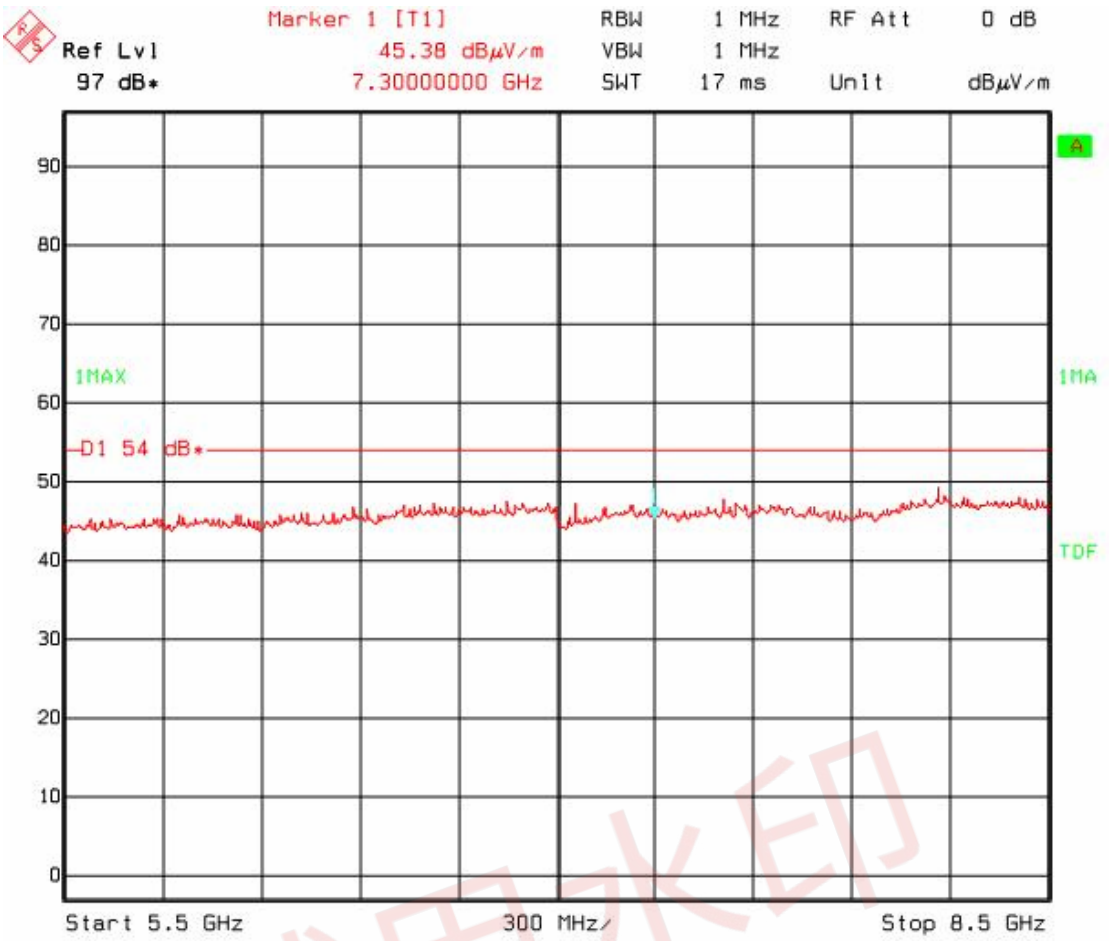

Figure 18: TX Spurious Emission 5.5 – 8.5 GHz

As opposed to FCC, ETSI has specific RX emission requirements. Table 4 and Table 5 list the ETSI RX spurious requirements.

	Narrowband spurious emission	Wideband spurious emission
30 MHz to 1 GHz	-57 dBm	-107 dBm/Hz
1 GHz to 12.75 GHz	-47 dBm	-97 dBm/Hz

Table 4: EN 300 328 RX Spurious Requirements

25 MHz to 1 GHz	-57 dBm
1 GHz to 10 times the carrier frequency*	-47 dBm

*Applies for equipment operating between 1 GHz and 20 GHz.

Table 5: EN 300 440 RX Spurious Requirements

The only signal detected above the noise floor when measuring RX spurious emission was the VCO leakage at 4.89 GHz. Figure 19 shows that the measured VCO leakage is below ETSI limits.

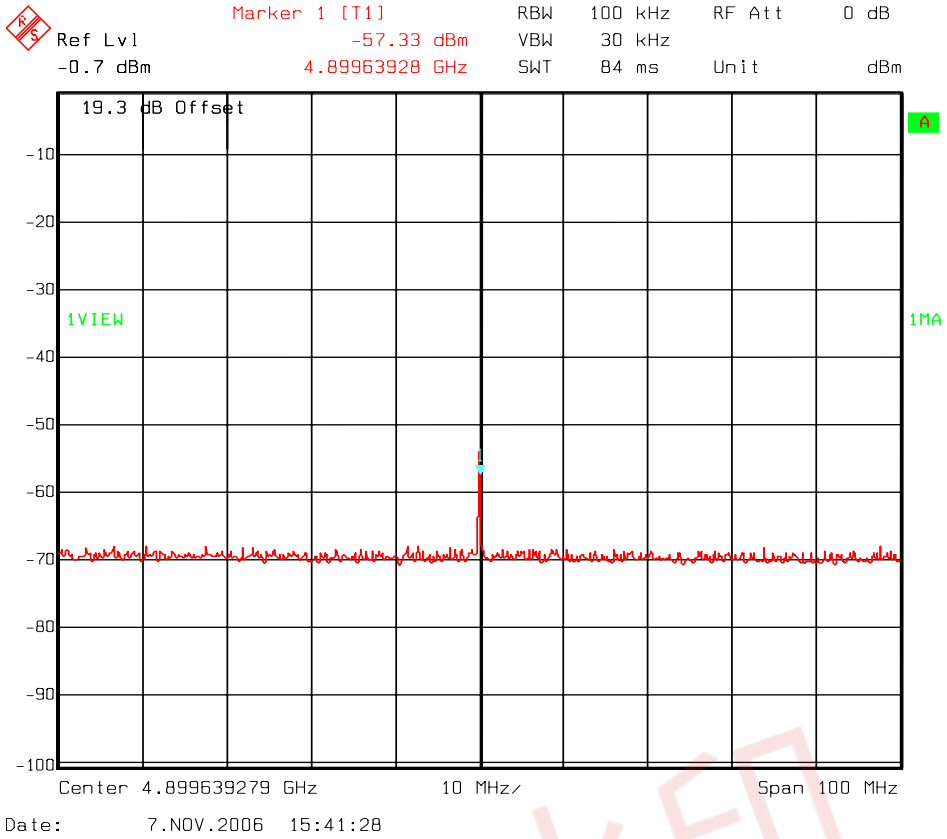

Figure 19: RX Spurious Emission

试用水印

6 CONCLUSION

This application note shows that it is possible to implement a 2.4 GHz antenna on a small area and still achieve good performance. Table 6 lists the most important properties of the Inverted F Antenna, described in this document. The free line of sight (LOS) range was measured with 250 kbps and 1 % PER.

Gain in XY plane	4.5 dB
Gain in XZ plane	5.3 dB
Gain in YZ plane	5.3 dB
Gain in XY plane, connected to laptop	3.3 dB
LOS range	240 m
Antenna size	15.2 x 5.7 mm

Table 6: IFA Properties (Measured on CC2511 Dongle Reference Design)

The results provided in section 5 shows that it is possible to comply with both ETSI and FCC regulations when implementing the suggested antenna together with CC2511 on a USB dongle.

7 GENERAL INFORMATION

7.1 Document History

Revision	Date	Description/Changes
SWRA117D	2008-04-04	Changed CCZACC06 to CC2480
SWRA117C	2008-02-27	Added reference to CCZACC06 and CC2520
SWRA117B	2007-06-01	Changed name of document
SWRA117A	2007-01-08	Added more dimensions in Figure 3 and Table 1
SWRA117	2006-11-28	Initial release.

试用水印

IMPORTANT NOTICE

Texas Instruments Incorporated and its subsidiaries (TI) reserve the right to make corrections, modifications, enhancements, improvements, and other changes to its products and services at any time and to discontinue any product or service without notice. Customers should obtain the latest relevant information before placing orders and should verify that such information is current and complete. All products are sold subject to TI's terms and conditions of sale supplied at the time of order acknowledgment.

TI warrants performance of its hardware products to the specifications applicable at the time of sale in accordance with TI's standard warranty. Testing and other quality control techniques are used to the extent TI deems necessary to support this warranty. Except where mandated by government requirements, testing of all parameters of each product is not necessarily performed.

TI assumes no liability for applications assistance or customer product design. Customers are responsible for their products and applications using TI components. To minimize the risks associated with customer products and applications, customers should provide adequate design and operating safeguards.

TI does not warrant or represent that any license, either express or implied, is granted under any TI patent right, copyright, mask work right, or other TI intellectual property right relating to any combination, machine, or process in which TI products or services are used. Information published by TI regarding third-party products or services does not constitute a license from TI to use such products or services or a warranty or endorsement thereof. Use of such information may require a license from a third party under the patents or other intellectual property of the third party, or a license from TI under the patents or other intellectual property of TI.

Reproduction of TI information in TI data books or data sheets is permissible only if reproduction is without alteration and is accompanied by all associated warranties, conditions, limitations, and notices. Reproduction of this information with alteration is an unfair and deceptive business practice. TI is not responsible or liable for such altered documentation. Information of third parties may be subject to additional restrictions.

Resale of TI products or services with statements different from or beyond the parameters stated by TI for that product or service voids all express and any implied warranties for the associated TI product or service and is an unfair and deceptive business practice. TI is not responsible or liable for any such statements.

TI products are not authorized for use in safety-critical applications (such as life support) where a failure of the TI product would reasonably be expected to cause severe personal injury or death, unless officers of the parties have executed an agreement specifically governing such use. Buyers represent that they have all necessary expertise in the safety and regulatory ramifications of their applications, and acknowledge and agree that they are solely responsible for all legal, regulatory and safety-related requirements concerning their products and any use of TI products in such safety-critical applications, notwithstanding any applications-related information or support that may be provided by TI. Further, Buyers must fully indemnify TI and its representatives against any damages arising out of the use of TI products in such safety-critical applications.

TI products are neither designed nor intended for use in military/aerospace applications or environments unless the TI products are specifically designated by TI as military-grade or "enhanced plastic." Only products designated by TI as military-grade meet military specifications. Buyers acknowledge and agree that any such use of TI products which TI has not designated as military-grade is solely at the Buyer's risk, and that they are solely responsible for compliance with all legal and regulatory requirements in connection with such use.

TI products are neither designed nor intended for use in automotive applications or environments unless the specific TI products are designated by TI as compliant with ISO/TS 16949 requirements. Buyers acknowledge and agree that, if they use any non-designated products in automotive applications, TI will not be responsible for any failure to meet such requirements.

Following are URLs where you can obtain information on other Texas Instruments products and application solutions:

Products		**Applications**	
Amplifiers	amplifier.ti.com	Audio	www.ti.com/audio
Data Converters	dataconverter.ti.com	Automotive	www.ti.com/automotive
DSP	dsp.ti.com	Broadband	www.ti.com/broadband
Clocks and Timers	www.ti.com/clocks	Digital Control	www.ti.com/digitalcontrol
Interface	interface.ti.com	Medical	www.ti.com/medical
Logic	logic.ti.com	Military	www.ti.com/military
Power Mgmt	power.ti.com	Optical Networking	www.ti.com/opticalnetwork
Microcontrollers	microcontroller.ti.com	Security	www.ti.com/security
RFID	www.ti-rfid.com	Telephony	www.ti.com/telephony
RF/IF and ZigBee® Solutions	www.ti.com/lprf	Video & Imaging	www.ti.com/video
		Wireless	www.ti.com/wireless

Mailing Address: Texas Instruments, Post Office Box 655303, Dallas, Texas 75265
Copyright © 2008, Texas Instruments Incorporated