USER MANUAL
Wireless Thermal Printer

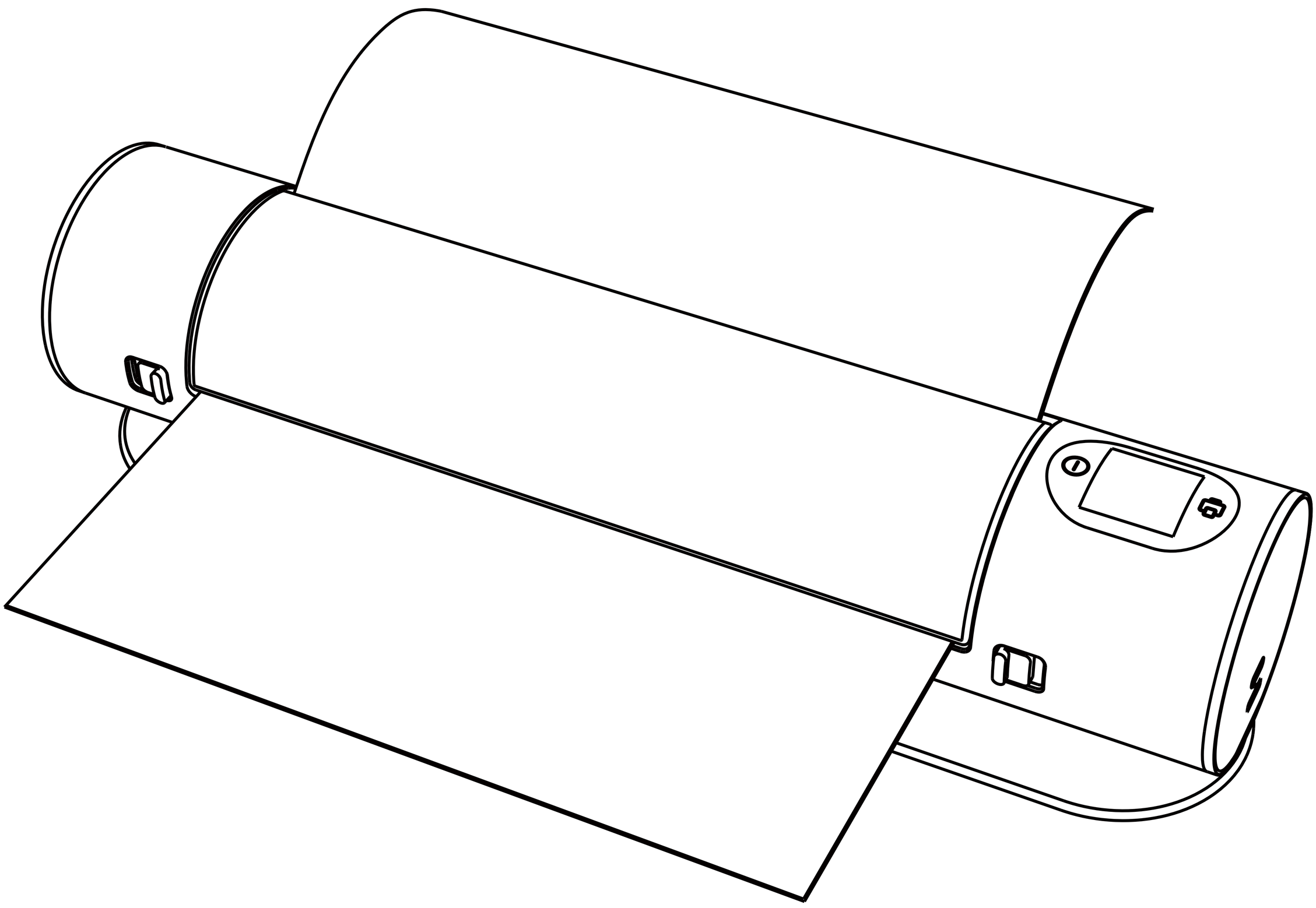

1 YEAR WARRANTY

Bluetooth 2500mAh Customized App

Product Intro

Appearance

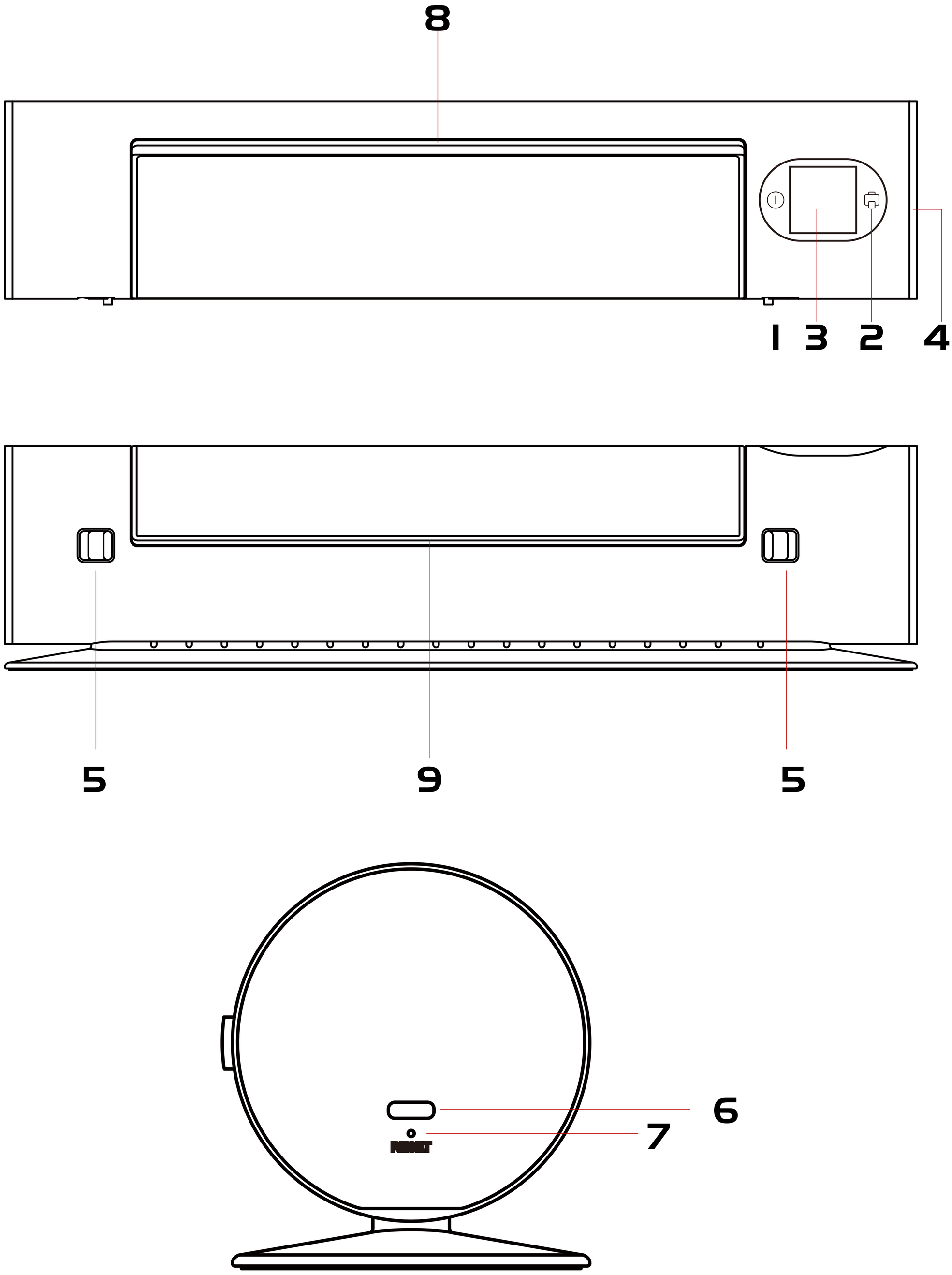

1.Power On/Off

2.Feed Button

3.Screen

4.Ambient Light

5.Case Open Tabs

6.Charging Port (Type-C & USB)

7.Reset

8.Paper In

9.Paper Out

Function Introduction

Function Details

1. **Power On/Off:** Long press for 3 seconds to power on/off, indicated by a beep sound. Double-click the button for a test print.

2. **Feed Button:** Long press to feed the paper. Double-click to unfeed the paper. Press the button again to stop the unfeed, or the printer will stop automatically when the sensor cannot detect paper.

3. **Screen：**

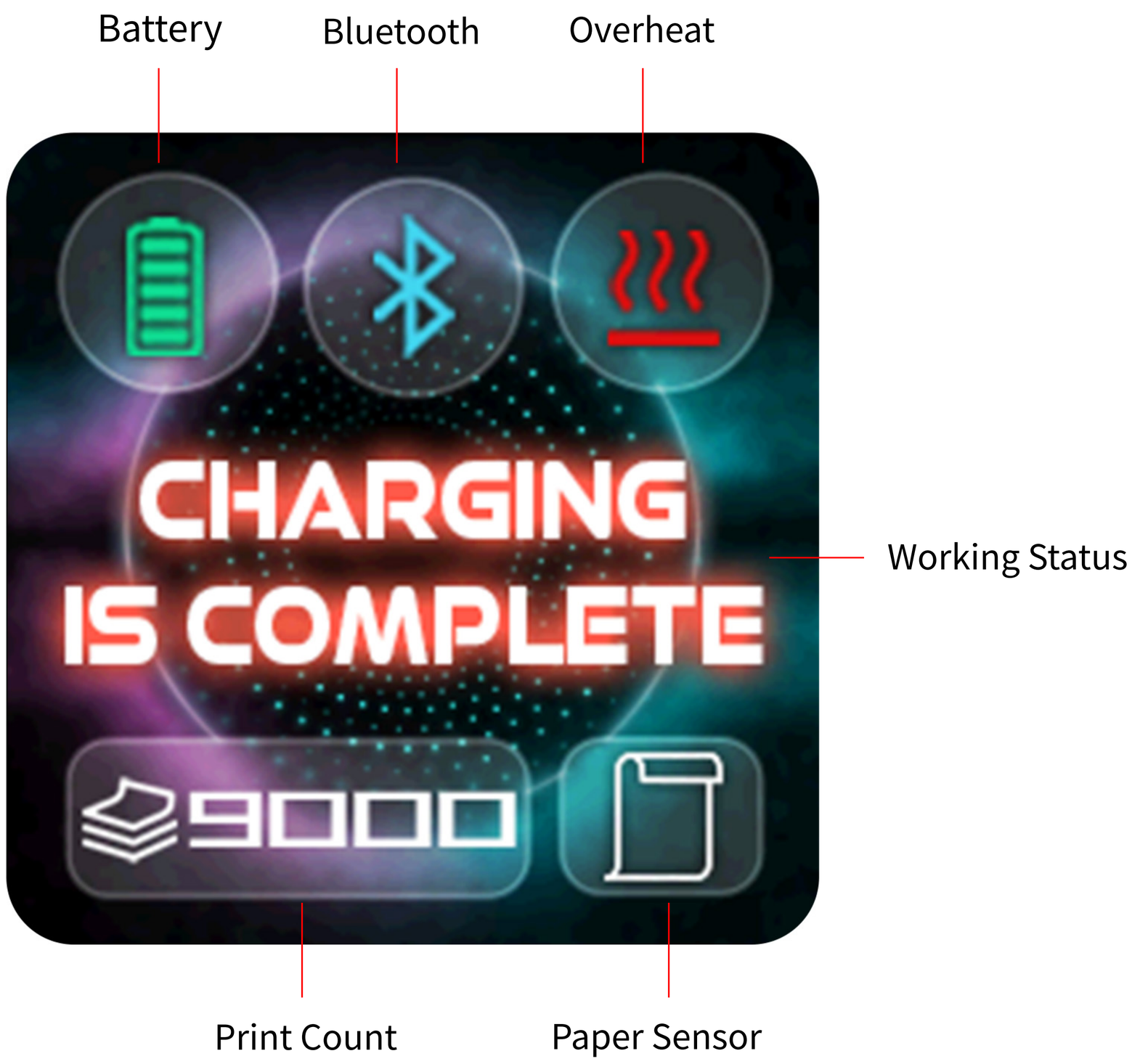

Working Status:

1. **Ready**: Appears after powering on.
2. **Printing:** Appears while printing.
3. **Printing is complete:** Appears when printing is finished and will change to "Ready" in 6 seconds.
4. **Standby Mode:** If no action is taken for 10 minutes, the printer will enter standby mode.
5. **Overheating:** The machine needs to cool down.
6. **Charging**: Once charging starts, the text on the screen will switch to the battery icon.
7. **Charging is complete:** After fully charging, the text changes to the battery icon, which will turn fully green.
8. **Power Off**: When the printer turns off, the screen will display the "Power off" icon.

Function Intro

Function Details

4. Ambient Light

① Power on: Symphony

② Printing: Teal

③ Fully Charged when Power off: Green

④ Battery < 20% : Orange，Battery < 10%: Red

5. Case Open Tabs

Push the tabs on both sides at the same time to open the case.

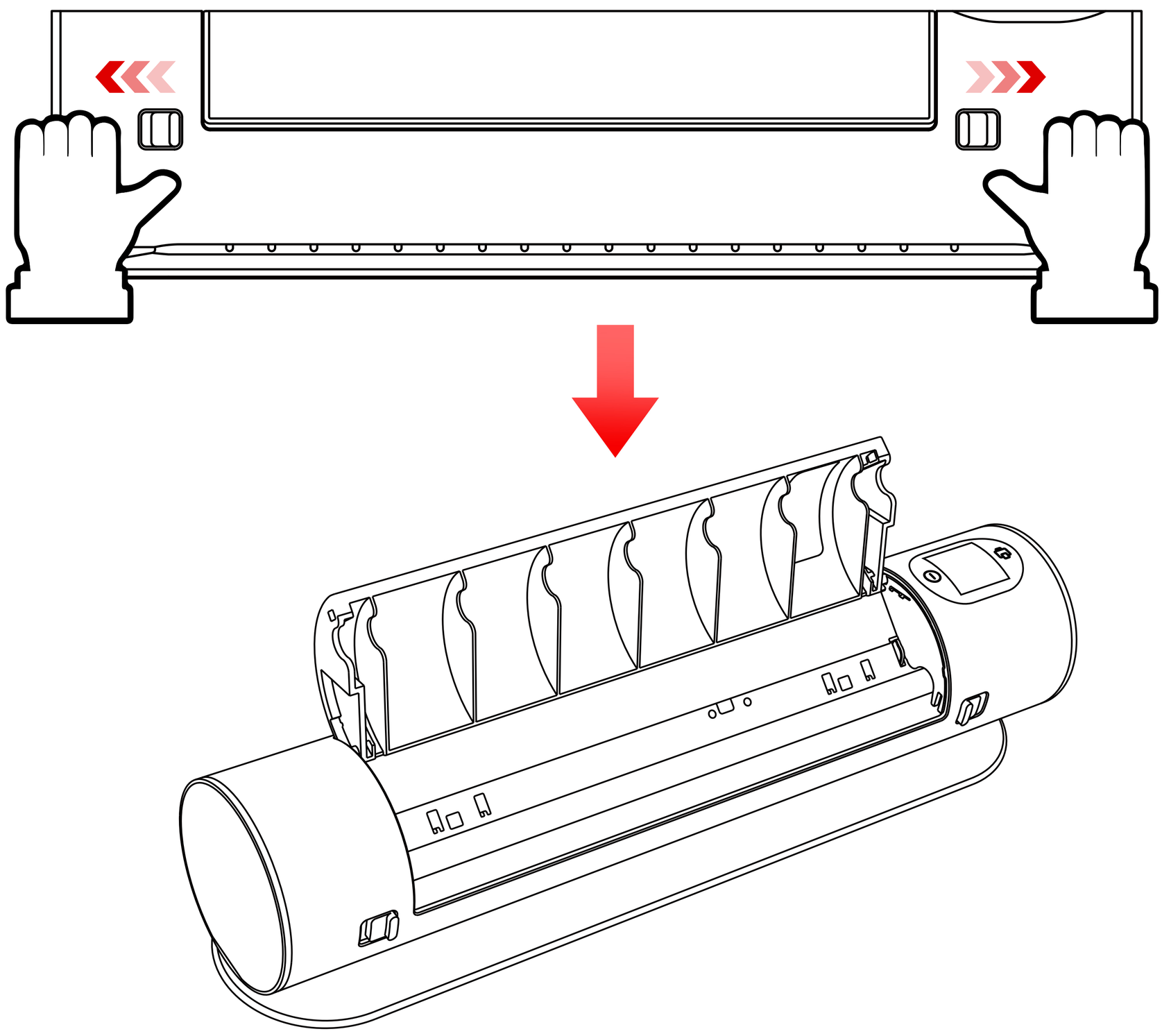

6. Charging Port(Type-C & USB): Note: Cannot print while charging

7. Reset: Reset the printer

8. Paper In

9. Paper Out

Operation Guide

Paper Loading

1. Long press 3s to power on

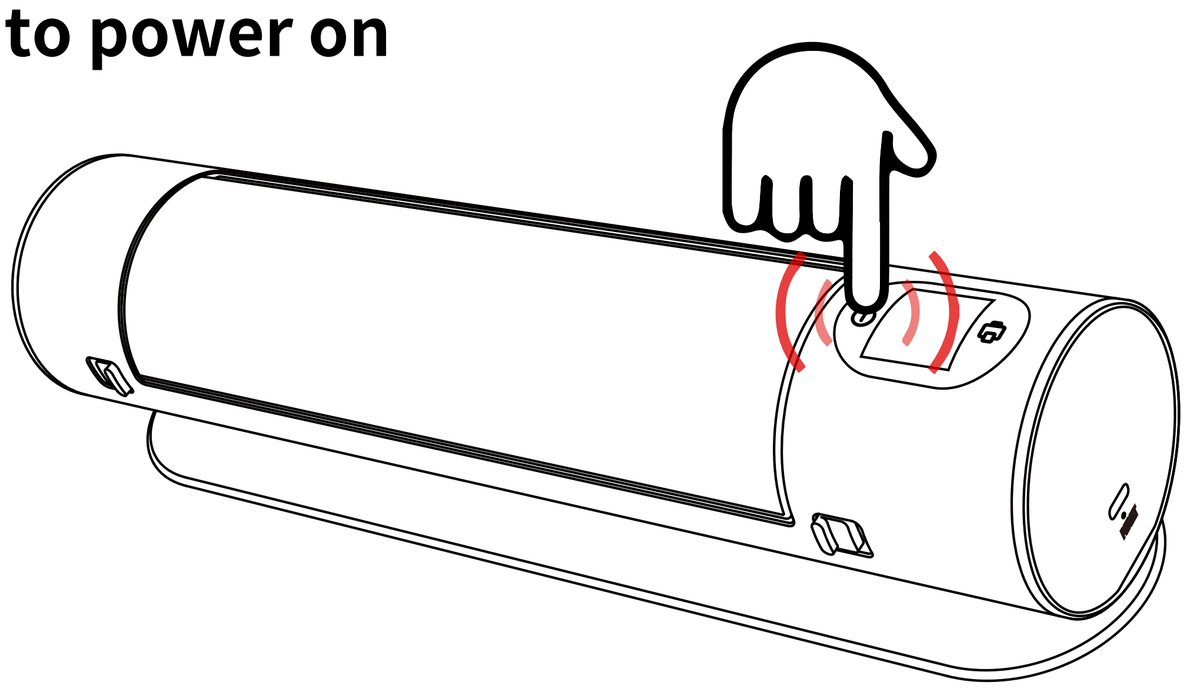

2. Prepare thermal paper

① Remove the yellow sheet before printing

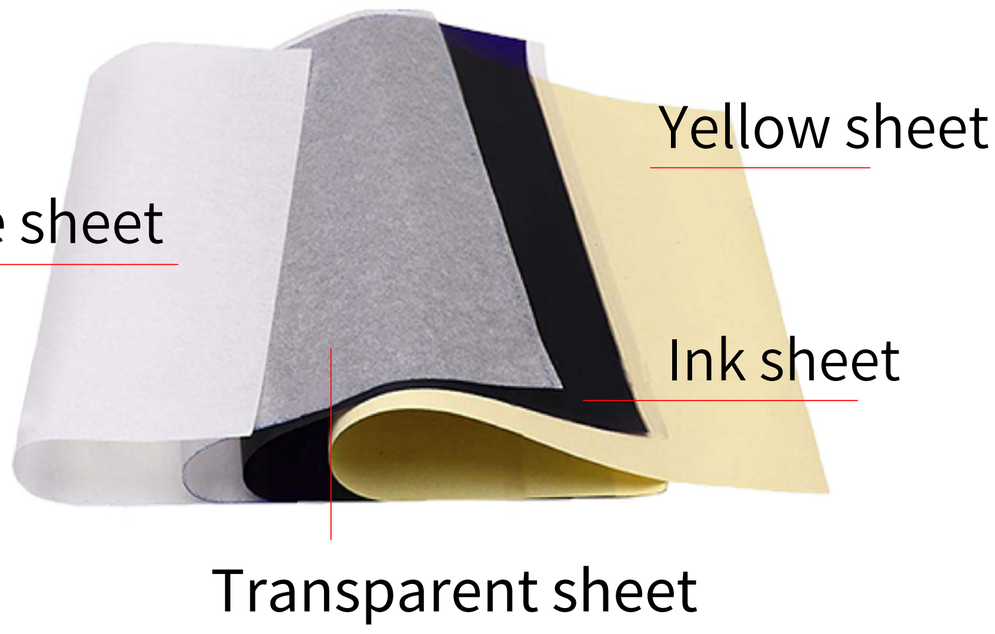

②Remove transparent sheet

3. Printing methods

① Case closed printing

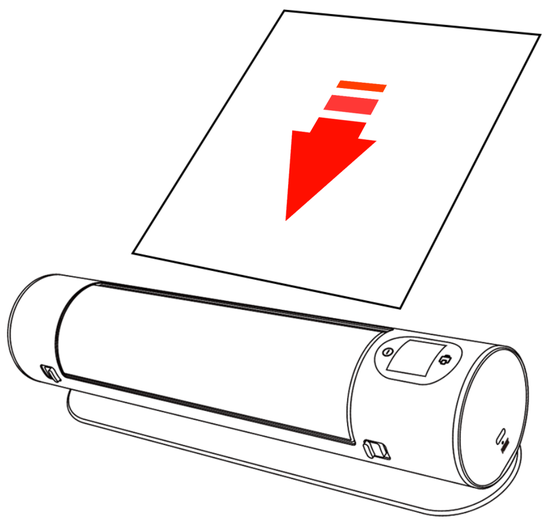

② Case open printing

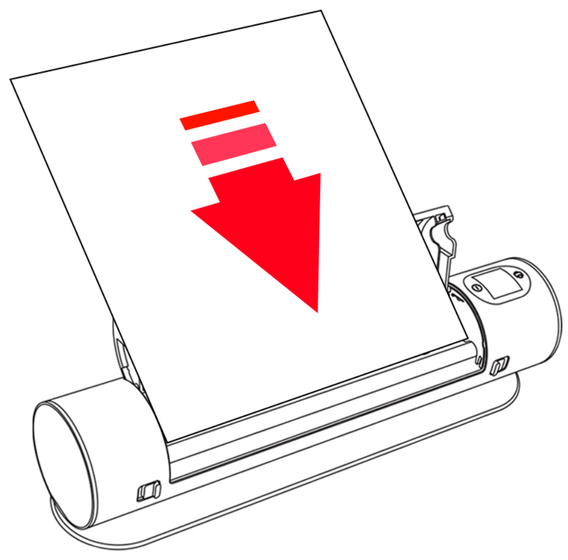

4. Cleaning methods

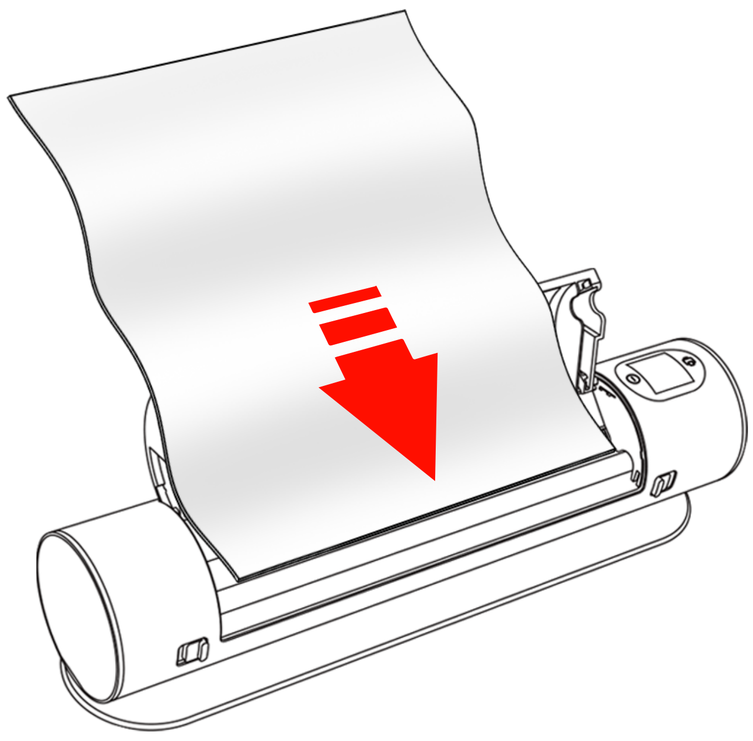

1.Open the printer case.
2.Insert the cleaning wipes the sameway you would insert thermal paper.
3.Press the feed button to clean theprinter head.

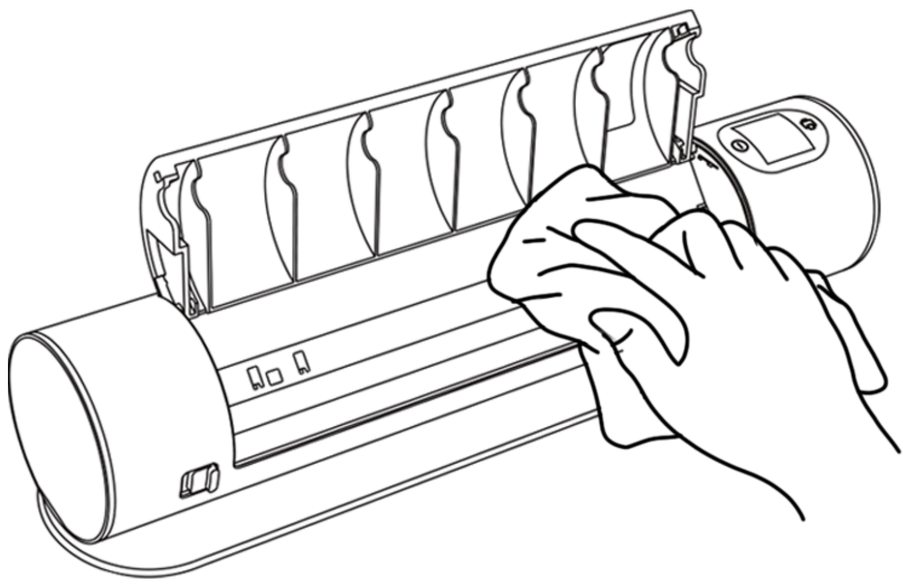

Open case and wipe roller with alcohol wipe

APP Conection

APP Download

Search ‘ai-tenitas’ on **APP STORE**

Search ‘ai-tenitas’ on **Google Play**

APP Guide

Scan QR Code for
APP operation guide.

Notice & Technical Data

Common Issue

issue	Cause	Solution
No pattern on sheet	1.Didn’ t remove the transparent sheet 2.Didn’ t feed the paper corretly	1.Remove the transparent sheet 2.Feed the paper as instrctions
Blurry	Haven’ t clean the printer for a long period, or bad quality thermal paper.	Open the case, put in cleaning wipes and press feed button to clean the printer
Making Noise	Didn’ t feed the paper corretly or jammed	Remove the paper then feed the paper as instrctions
Auto shut down or incoherent	Battery too low	Charge ASAP

Precautions

Printing Notes

1. It is recommended not to print in high humidity and dusty areas.
2. If the print head is overheated after printing, please do not touch it directly.
3. To prevent static electricity from damaging the print head, do not touch the print head.Charging Notes

Printing Notes

1. Please use the original cable to charge, otherwise the printer may overheat, catch fire and burn out.
2. Do not charge in a high temperature environment.
3. If the wrong type of battery is replaced, there is a risk of explosion. It is forbidden to replace the battery privately. Replacing the battery privately will void the warranty

Technical Data

Effective printing width 210mm	**Resolving power** 203DPI
Size(MM) 323*70*79	**Battery capacity** 2500mAh
Connection mode USB+Bluetooth	**Inpute** 5V ⎓ 2A
Paper size A4 Tattoo transfer paper	**Support system** Android&ios&Windows

FCC Requirement

changes or modifications not expressly approved by the party responsible for compliance could void the user’ s authority to operate the equipment.

This device complies with Part 15 of the FCC Rules. Operation is subject to the following two conditions:

(1) this device may not cause harmful interference, and

(2) this device must accept any interference received, including interference that may cause undesired operation.

Note: This equipment has been tested and found to comply with the limits for a Class B digital device, pursuant to Part 15 of the FCC Rules. These limits are designed to provide reasonable protection against harmful interference in a residential installation. This equipment generates, uses, and can radiate radio frequency energy, and if not installed and used in accordance with the instructions, may cause harmful interference to radio communications. However, there is no guarantee that interference will not occur in a particular installation. If this equipment does cause harmful interference to radio or television reception, which can be determined by turning the equipment off and on, the user is encouraged to try to correct the interference by one or more of the following measures:

– Reorient or relocate the receiving antenna.

– Increase the separation between the equipment and receiver.

– Connect the equipment into an outlet on a circuit different from that to which the receiver is connected.

– Consult the dealer or an experienced radio/TV technician for help.