PSA

佳邦科技股份有限公司

INPAQ TECHNOLOGY CO., LTD.

ADD：Room 515, Building C, Next Generation Information Technology Industrial Park,Chuangye 2nd Road, Baoan District, Shenzhen,51800 China

Model: EAN00023

Copyright © by Passive System Alliance | All rights reserved.

PASSIVE SYSTEM ALLIANCE

PSA

PASSIVE SYSTEM ALLIANCE

INPAQ TECHNOLOGY CO., LTD.

Copyright © by Passive System Alliance | All rights reserved.

Version	Date	Description	Author
V01	2023/08/09	New Release	郑冲

OUTLINE

1. Measurement Information

   1.1 Experimental Setup

   1.2 Antenna Solution Detail

2. Antenna Characteristics

   2.1 S-Parameter

   2.2 Antenna Efficiency and Peak Gain

   2.3 3 views of antenna & 2D Radiation Patterns

3. Summary

COPYRIGHT © INPAQ TECHNOLOGY CO., LTD ALL RIGHT RESERVED.
PSA PASSIVE SYSTEM ALLIANCE

1. Measurement Information

1.1 Experimental Setup

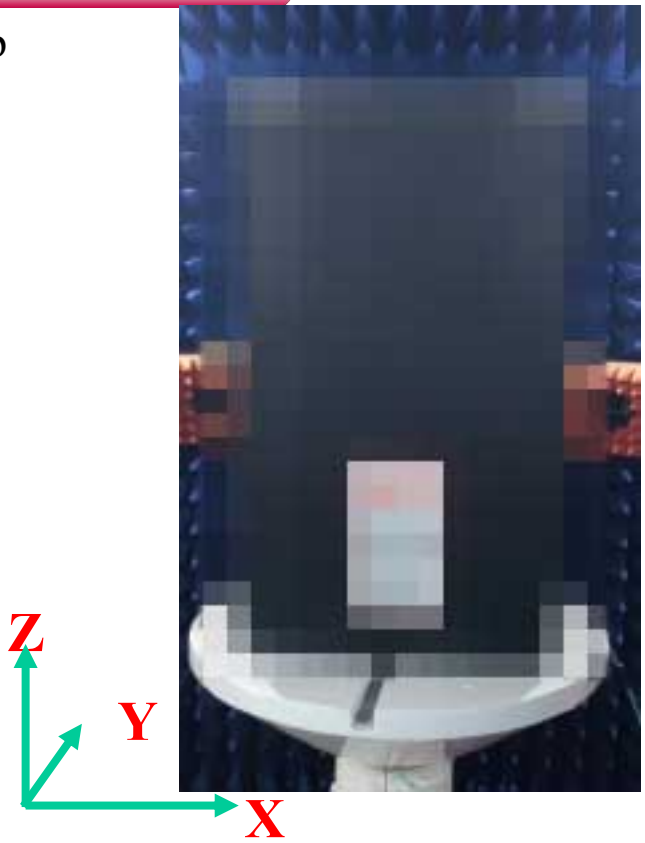

1. Measurement Information

1.2 Antenna Solution Detail

天线位置

著作權所有 侵害必究
COPYRIGHT© INPAQ TECHNOLOGY CO., LTD ALL
PSA
PASSIVE SYSTEM ALLI
INPAQ TECHNOLOGY

2. Antenna Characteristics

2.1 S-Parameter

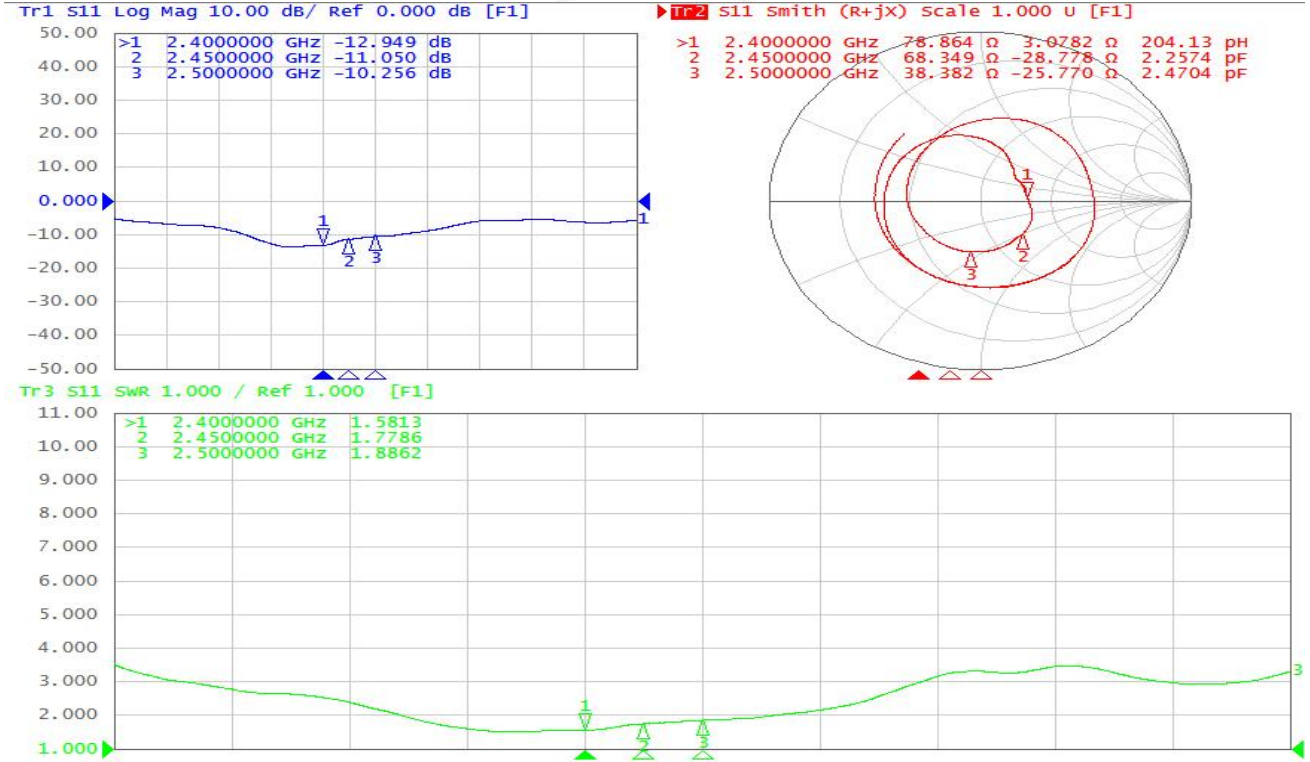

2. Antenna Characteristics

2.2 Antenna Efficiency and Peak Gain

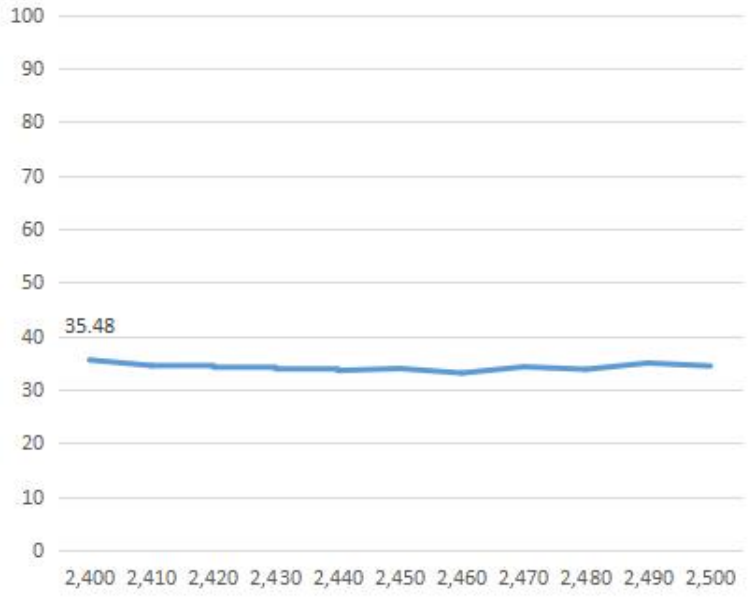

Maximum Efficiency at 2400 MHz : 35.48%

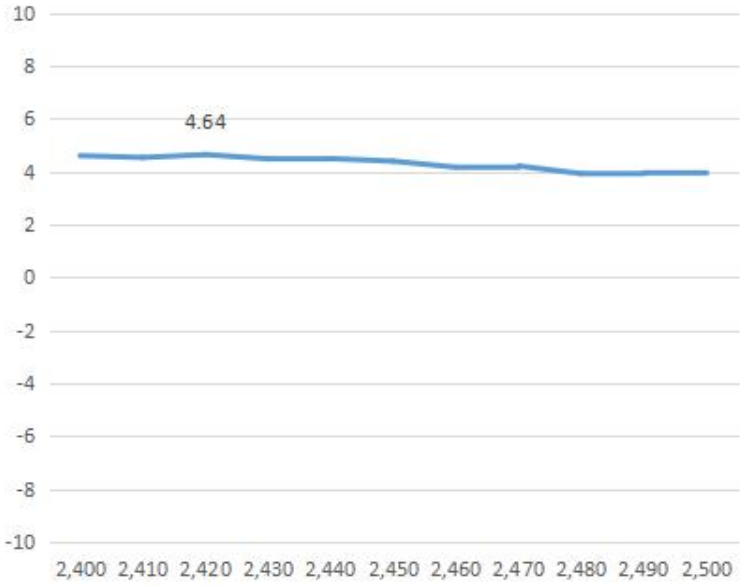

Maximum Peak Gain at 2420MHz :4.64dBi

2. Antenna Characteristics

2.2 Antenna Efficiency and Peak Gain

	ANT	
Frequency (GHz)	Efficiency (%)	Peak gain (dBi)
2.4	35.48	4.6
2.45	33.88	4.39
2.5	34.36	3.91

COPYRIGHT© INPAQ TECHNOLOGY CO., LTD ALL RIGHT RESERVED.

2. Antenna Characteristics

2.3 3 views of antenna

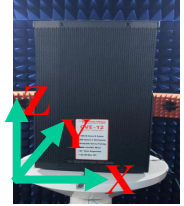

X-Z plane	Y-Z plane	X-Yplane

2. Antenna Characteristics

2.3 2D Radiation Patterns

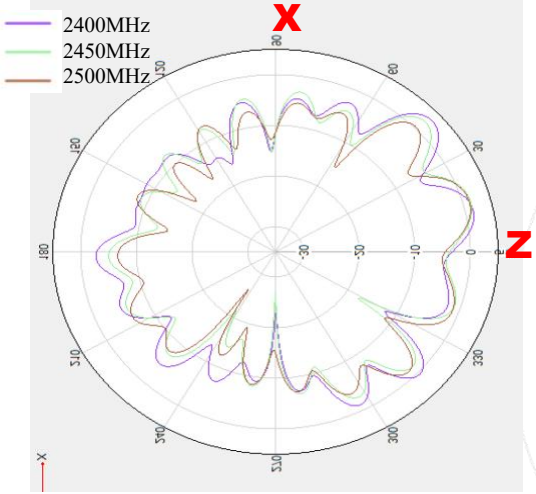

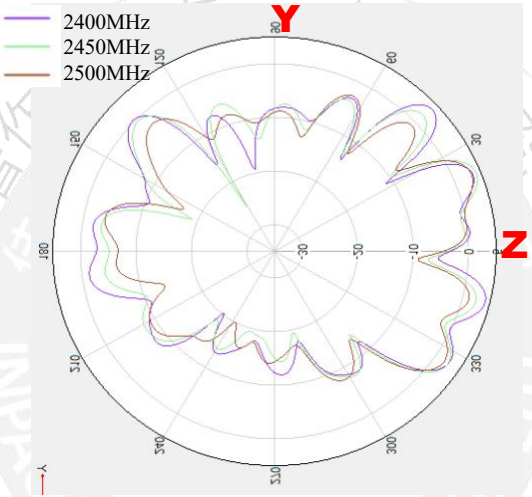

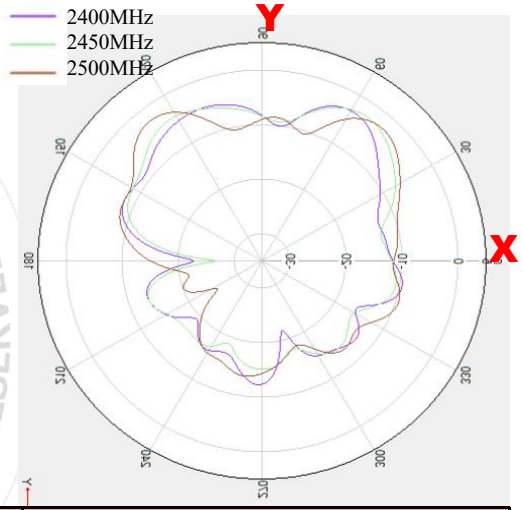

	ZX plane		ZY plane		XY plane	
Frequency [MHz]	Max Value [dBi]	Average [dBi]	Max Value [dBi]	Average [dBi]	Max Value [dBi]	Average [dBi]
2400	3.22	-5.17	4.19	-4.64	-3.23	-10.62
2450	2.19	-5.95	4.23	-5.35	-2.66	-10.36
2500	1.2	-6.6	3.34	-6.14	-2.49	-10.13

3. Summary

- The performance of antennas is shown in table

	ANT
Maximum Efficiency (%)	**35.48**
Maximum Gain (dBi)	**4.64**

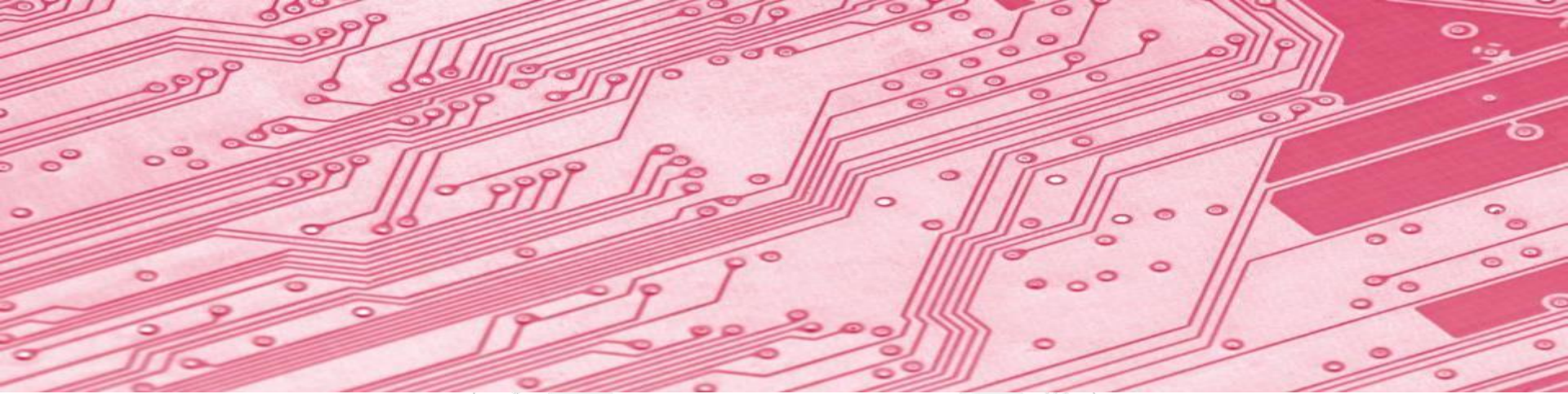

PSA
PASSIVE SYSTEM ALLIANCE
INPAQ TECHNOLOGY CO., LTD
COPYRIGHT© INPAQ TECHNOLOGY CO., LTD ALL RIGHT RESERVED

Title for Image (above image could be replaced)

Content Details

Dimensions

ELECTRICAL
Frequency : 2.4 GHz

NO	DESCRIPTION		QTY	REMARK
A	Body	FR4(T=0.6mm),黑漆	1	
B	Double Tape	3M 9888T	1	
C	Coaxial cable	(Φ1.13) Cable(Black)	1	
D	Ferrite Core(⌀4.0*L10mm) Black		1	
E	Heat Shrink Tube (CB-HFT) Black		1	
F	Heat Shrink Tube (CB-HFT) Black		2	
G	Connector	IPEX Compatible(Gold)	1	
H	Sponge(F-2G)+Double Tape(單面背膠)		1	

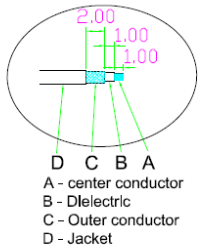

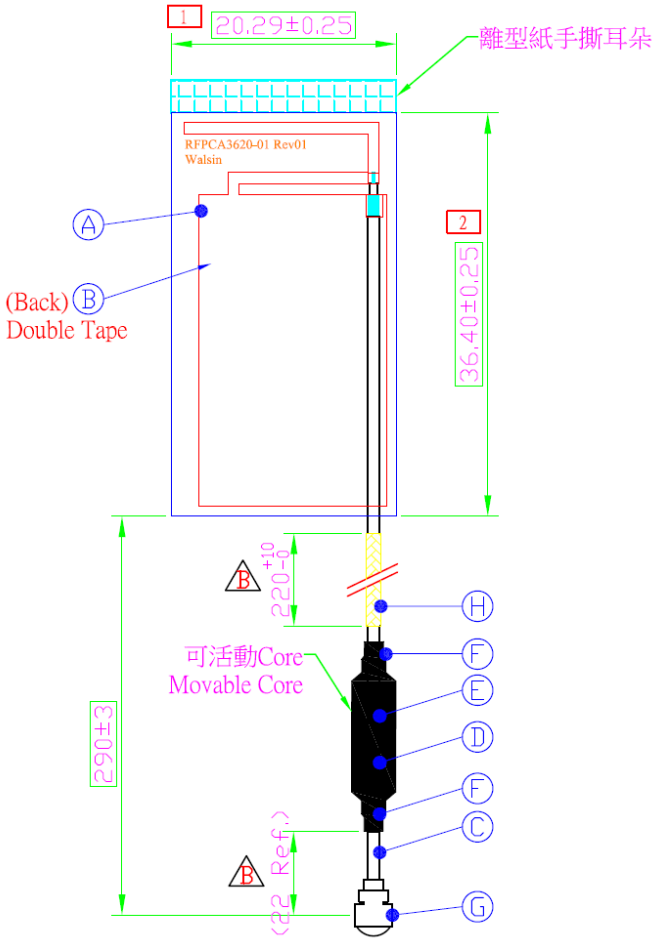

※標記□記號者，為重點檢驗尺寸

LTR	DESCRIPTION	DATE	REQ. BY
B	變更core位置、增加防火泡棉	2017.03.23	PIPI

設計 DR. PIPI 2017.03.21
核准 APPD. Marco

容許公差 TOLERANCE
6以下.....±0.2
6以上~30.....±0.5
30以上~120.....±0.8
120以上~315.....±1.2
315以上~1000.....±2.0
1000以上~2000.....±3.0

品名 ARTICLE: RFPCA362029IMAB301

版本 REV. B

單位 UNIT mm | 比例 SCALE **** | 張數 SHEET 1

華新科技股份有限公司
Walsin Technology Corporation

Thank you

本資料均屬機密，僅供指定之收件人使用，未經寄件人許可不得揭露、複製或散佈本信件。

This message and any attachments are confidential and may be legally privileged. Any unauthorized review, use or distribution by anyone other than the intended recipient is strictly prohibited. If you are not the intended recipient, please immediately notify the sender, completely delete this documents, and destroy all copies. Your cooperation will be highly appreciated.