Z01-V4.0 SPECIFICATION

Version V1.10

宁波方太厨具有限公司

NINGBO FOTILE KITCHEN WARE CO; LTD

Confirmation Specification for Outsourced Parts

Supplier: WUXI DENVEL INTELLIGENT ELECTRONIC INCORPORATED

Supply Product Name: Smoke stove linkage - furnace end receiving box

Supplier Drawing Number: DR-A879(Z01)

Check Code

F92D2A3BF9C750D19062F8544E4E1B65

FOTILE Product Name: Linkage module of range hood and cooktop

FOTILE Drawing No: HNWY-G2000

FOTILE material code: 1102002507500

Importance level: A

Confirm printing column

Confirmation column			
take on	date	to examine	ratify
Change column			
Set change instruction	Set variable symbol	support	date

Table of Contents

Table of Contents 2
1 DESCRIPTION 3
1.1 PRODUCT DESCRIPTION 3
1.2 Features 3
2 Appearance size&Pin define 4
2.1 Pin define 4
2.2 Appearance size 5
3 ELECTRICAL PARAMETERS 5
3.1 Electrical characteristics 5
3.2 RF performance 6
3.3 static electricity 6
4 Design reference 6
4.1 Hardware design consideration 6
4.2 Antenna clearance area 8
5 problem 9
5.1 Short distance 9
5.2 module is easily damaged 9
6 Production operation instruction 10
6.1 Preservation and baking of modules 10
6.2 Attention 10
6.3 SMT temperature 11
6.4 SMT temperature curve 11
7 3D VIEW 12
8 Appendix: declaration 13
9 Revise 14

1 DESCRIPTION

1.1 PRODUCT DESCRIPTION

Tm9001 is a low-power and low-cost RF module developed by Shanghai Gangji Electronic Technology Co., Ltd. for short-range wireless transmission. It integrates a 32-bit RISC core MCU, 2.4G radio module, 8KB ram, 16kb OTP and rich peripheral resources.

1.2 Features

- small package, only 16*24mm
- high power, maximum +10dBm
- support ISM 2.4GHz
- support 2 Mbps,1 Mbps,500Kbps,250Kbps
- 125 channel
- Support secondary development
- Voltage 1.9V ~ 3.6V
- 32-bit RISC core , support secondary development
- On board antenna design

2 Appearance size&Pin define

2.1 Pin define

Figure 1 Pin define

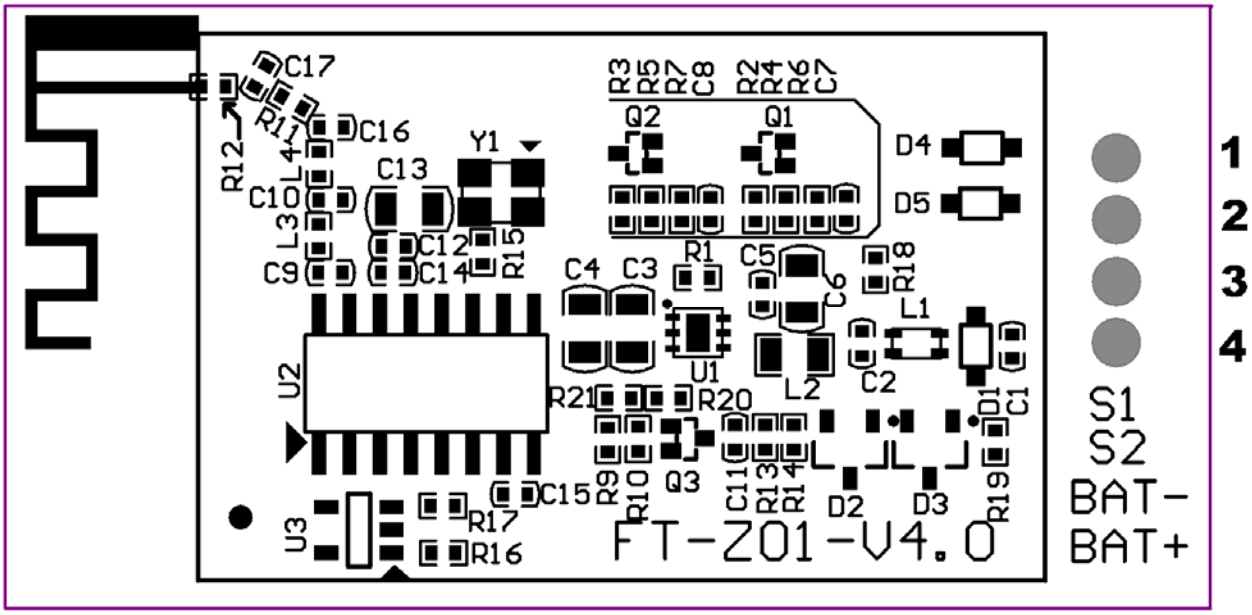

Table Pin define

Pin	Symbol	Type	Description
1	S1	DI	Input 1
2	S2	DI	Input 2
3	BAT-	Power	battery power negative
4	BAT+	Power	battery power positive

2.2 Appearance size

Figure 2 Appearance size

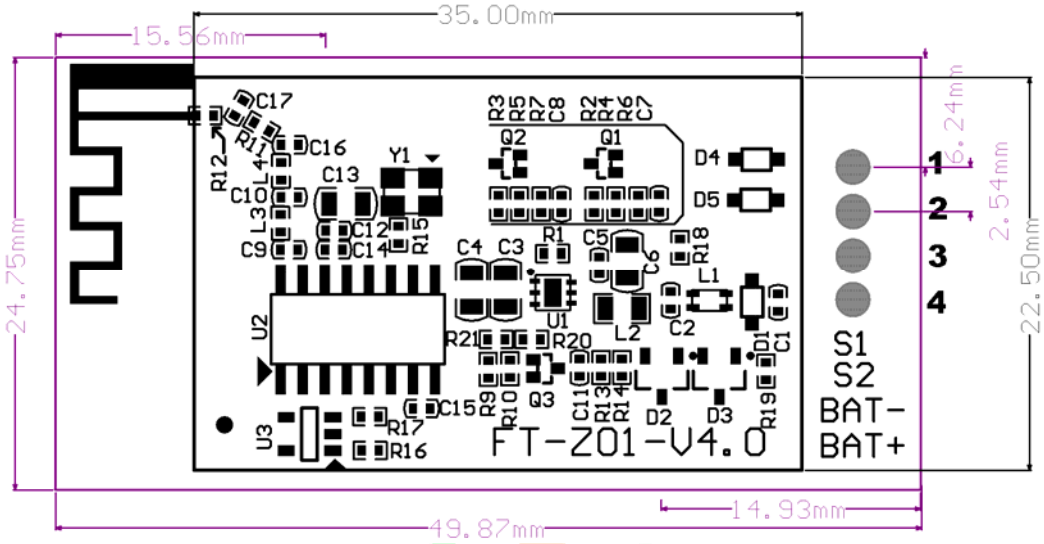

3 ELECTRICAL PARAMETERS

3.1 Electrical characteristics

Table1 Electrical characteristics

Item	Symbol	Min	Typical	Max	Unit	
Power supply voltage	VDD	1.9	3.3	3.6	V	
Operating temperature	T_{Opr}	-40		85	ºC	
Operating humidity				95%		
Transmit mode	I_{Tx}		14.5		mA	TX@0dBm
			25		mA	TX@8dBm
Receive mode	I_{Rx}		13.6		mA	
Suspend mode	I_{Susp}		6.8		uA	
Deep sleep mode	I_{Deep}		2.0		uA	

*Note : All test items are at (T=25℃).

3.2 RF performance

Table2 RF performance

Item	Symbol	Min	Typical	Max	Unit	
Frequency range	Freq	2380		2500	MHz	
Data rate		0.25		2	Mbps	
Receive sensitivity	R_{sen}		-86		dBm	@1Mbps
Transmit power	P_{out}	-20		7	dBm	
ANT Gain	Gain		1.5		dBi	

3.3 static electricity

Table3 static electricity

主要参数	缩写	最小	典型	最大	单位	备注
VESD				2000	V	HBM
VESD				500	V	CDM

4 Design reference

4.1 Hardware design consideration

* It is recommended to use DC regulated power supply to supply power to the module. The ripple coefficient of the power supply shall be as small as possible, and the module shall be reliably grounded;

* If the positive and negative polarity of the power supply module is correctly connected, please note that it may cause permanent damage;

* Please check the power supply to ensure that it is between the recommended power supply voltage. Exceeding the maximum value will cause permanent damage to the module;

* Please check the stability of the power supply. The voltage cannot fluctuate greatly and frequently;

* When designing the power supply circuit for the module, it is often recommended to reserve more than 30% margin, which is conducive to the long-term and stable operation of the whole machine;

* The module shall be far away from the power supply, transformer, high-frequency wiring and other parts with large electromagnetic interference as far as possible;

* The high-frequency digital wiring, high-frequency analog wiring and power wiring must avoid the lower part of the module. If it is really necessary to pass under the module, it is assumed that the module is welded on the top layer, and the copper is laid on the top layer of the contact part of the module (all copper is laid and well grounded). It must be close to the digital part of the module and routed in the bottom layer;

* Assuming that the module is welded or placed in the top layer, it is also wrong to randomly route in the bottom layer or other layers, which will affect the stray and receiving sensitivity of the module to varying degrees:

* It is assumed that there are devices with large electromagnetic interference around the module, which will also greatly affect the performance of the module. According to the intensity of interference, it is recommended to stay away from the module properly, and if the situation allows, appropriate isolation and shielding can be done。

* It is assumed that there are wires with large electromagnetic interference around the module (high-frequency digital, high-frequency analog and power wiring) which will also greatly affect the performance of the module. According to the intensity of interference, it is recommended to stay away from the module properly, and appropriate isolation and shielding can be done if the situation allows。

* Keep away from some physical layers as far as possible, also 2 4GHz TTL protocol, such as usb3 0;

* The antenna installation structure has a great impact on the performance of the module. Make sure that the antenna is exposed, preferably vertically upward. When the module is installed inside the shell, the high-quality antenna extension cable can be used to extend the antenna to the outside of the shell. It must not be installed inside the metal shell。

* Professional antenna should be used. Pay attention to the impedance matching between antenna and ant pin. Impedance mismatch will greatly weaken the signal strength

4.2 Antenna clearance area

* When using PCB antenna on Bluetooth module, it is necessary to ensure that the distance between mainboard PCB and other metal devices is at least 15mm. The marked area in the black box in the figure below needs to be far away from metal devices, sensors, interference sources and other materials that may cause signal interference.

Figure 3 Antenna clearance area

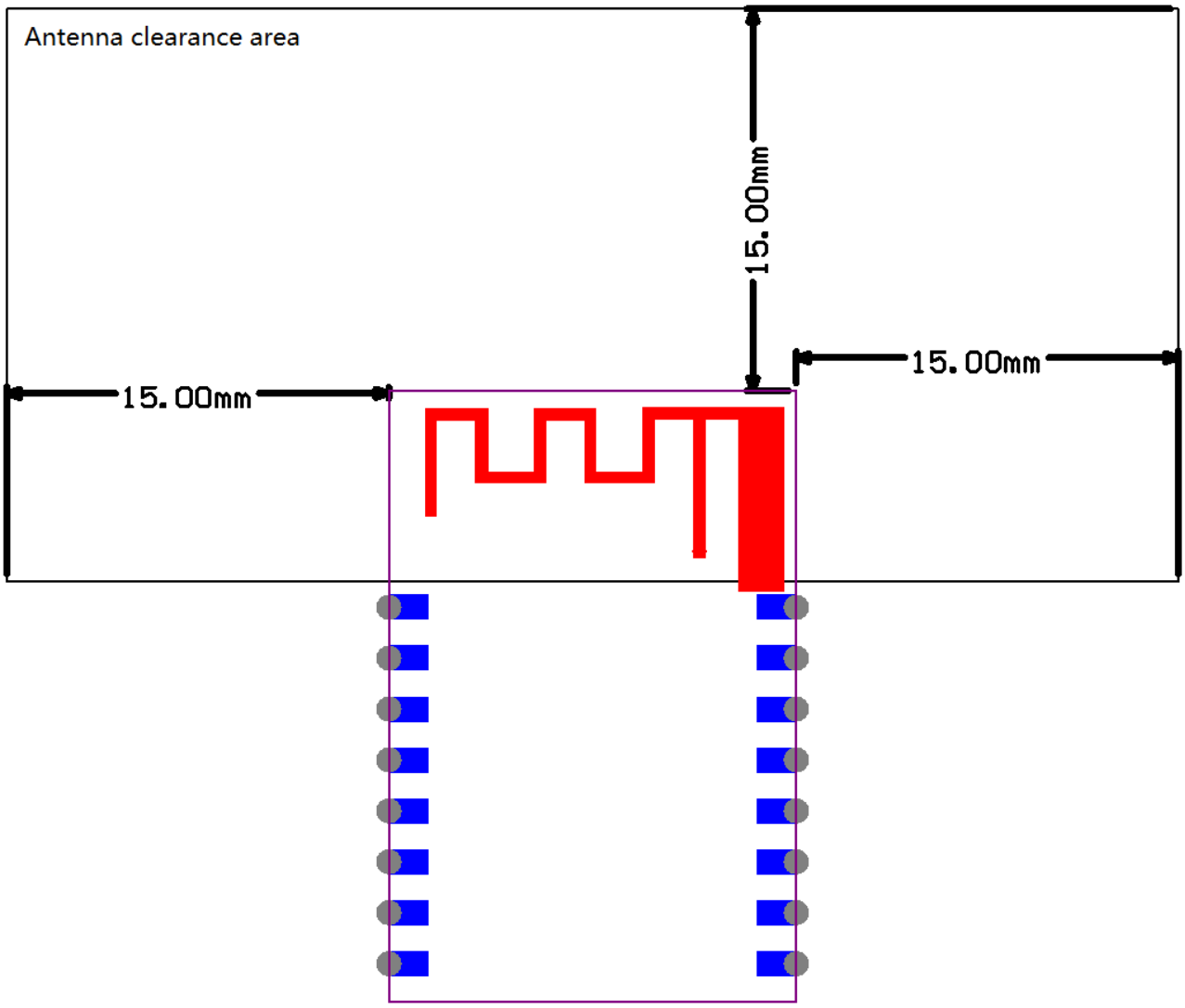

5 problem

5.1 Short distance

* When there is a straight-line communication obstacle, the communication distance will be attenuated accordingly;
* Temperature, humidity and co frequency interference will increase the packet loss rate of communication;
* The ground absorbs and reflects radio waves, and the test effect near the ground is poor;
* Seawater has a strong ability to absorb radio waves, so the seaside test effect is poor;
* If there are metal objects near the antenna or placed in a metal shell, the signal attenuation will be very serious;
* At room temperature, the low voltage of the power supply is lower than the recommended value. The lower the voltage, the smaller the power;
* Antenna impedance mismatch;

5.2 module is easily damaged

* Please check the power supply to ensure that it is between the recommended power supply voltage. Exceeding the maximum value will cause permanent damage to the module:
* Please check the stability of the power supply. The voltage cannot fluctuate too much:
* Please ensure anti-static operation during installation and use, and high-frequency devices are sensitive to static electricity;
* Please ensure that the humidity should not be too high during installation and use, and some components are humidity sensitive devices:
* If there are no special requirements, it is not recommended to use it at too high or too low temperature。

6 Production operation instruction

6.1 Preservation and baking of modules

* The modules delivered by our company are packaged in disk and vacuum electrostatic bag

* It shall be stored in an environment with temperature < 30 ℃ and humidity < 85% RH

* For modules exposed to air for more than 24 hours or in high humidity environment, baking operation shall be carried out before production

  - Bake temperature: 125℃±5℃;
  - Alarm temperature:130℃;
  - SMT patch can be carried out after cooling to 36 ℃ under natural conditions;
  - Drying times: ≤1;
  - If it is not used for more than 12 hours after baking, please bake again;

* The module shall be used as soon as possible after unpacking. If the unpacking time is more than 3 months, please do not use SMT process to weld this batch of modules. Due to the PCB gold deposition process, the pad oxidation is serious after more than 3 months, and the SMT patch is likely to lead to false soldering and missing soldering. Our company will not bear the corresponding responsibility for the problems caused by this.

6.2 Attention

★ In the whole process of production, the operators of each station must wear electrostatic gloves;

★ The baking time shall not exceed the baking time;

★ It is forbidden to add explosive, combustible and corrosive substances during baking;

★ When baking, the module shall be put into the oven with a high-temperature tray to maintain air circulation between each module and avoid direct connection between the module and the inner wall of the oven。when baking, please close the oven door to ensure that the oven is closed to prevent temperature leakage and affect the baking effect;

★ Try not to open the oven door when the oven is running. If it must be opened, try to shorten the opening time;

★ After baking, the module shall be cooled to < 36 ℃ naturally before being taken out with electrostatic gloves to avoid scalding;

★ During operation, the bottom surface of the module shall be strictly prevented from being contaminated with water or dirt;

6.3 SMT temperature

Figure 5 SMT temperature

Profile Feature	曲线特征	Sn-Pb Assembly	Pb-Free Assembly
Solder Paste	锡膏	Sn63/Pb37	Sn96.5/Ag3/Cu0.5
Preheat Temperature min (Tsmin)	最小预热温度	100℃	150℃
Preheat temperature max (Tsmax)	最大预热温度	150℃	200℃
Preheat Time (Tsmin to Tsmax)(ts)	预热时间	60-120 sec	60-120 sec
Average ramp-up rate(Tsmax to Tp)	平均上升速率	3℃/second max	3℃/second max
Liquidous Temperature (TL)	液相温度	183℃	217℃
Time (tL) Maintained Above (TL)	液相线以上的时间	60-90 sec	30-90 sec
Peak temperature (Tp)	峰值温度	220-235℃	230-250℃
Aveage ramp-down rate (Tp to Tsmax)	平均下降速率	6℃/second max	6℃/second max
Time 25℃ to peak temperature	25℃到峰值温度的时间	6 minutes max	8 minutes max

6.4 SMT temperature curve

Figure 6 SMT temperature curve

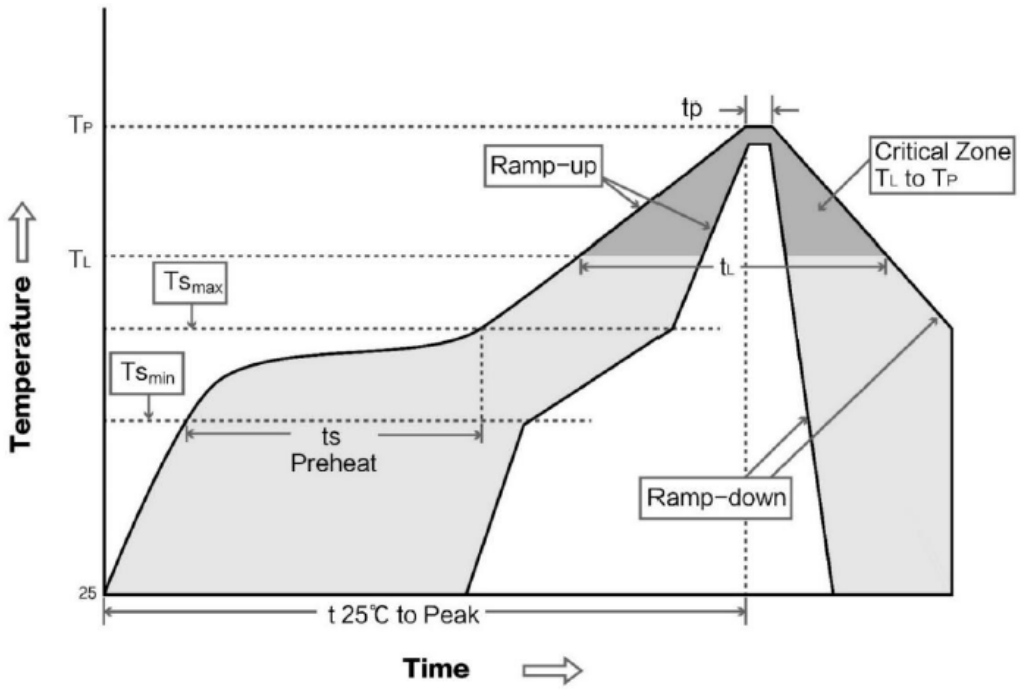

7 3D VIEW

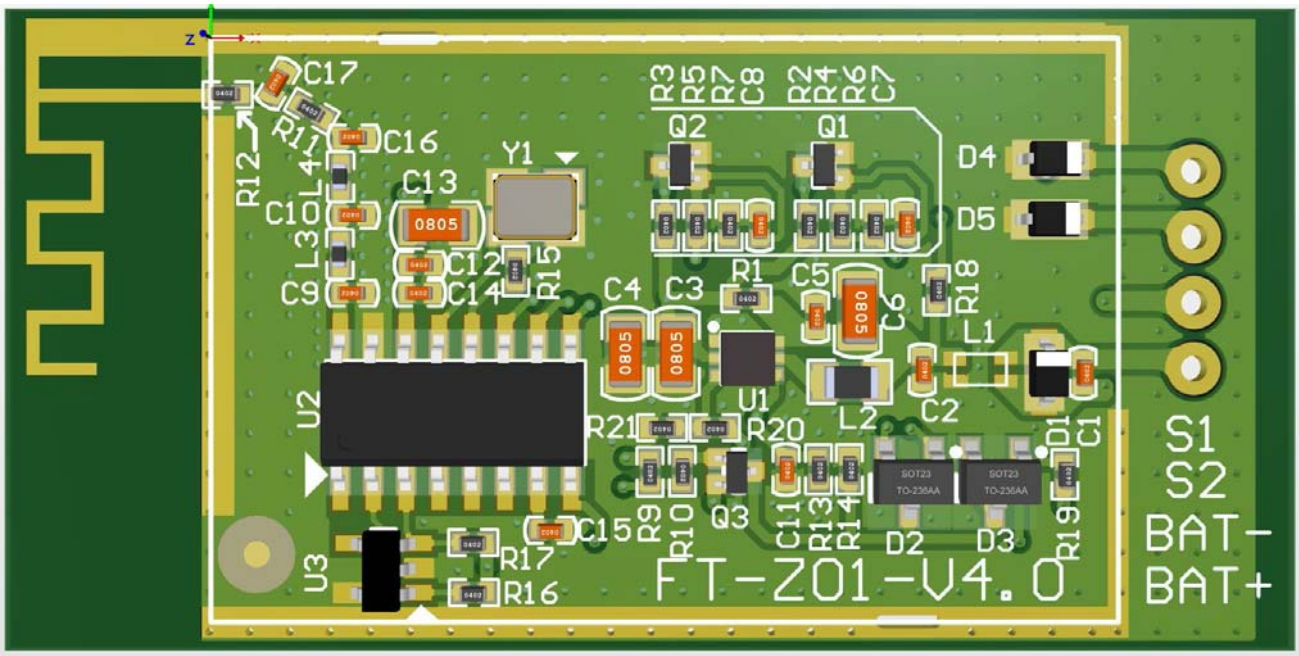
C17
R11
C16
R12
L4
C10
L3
C9
C13
0805
Y1
C12
C14
R15
R3 R5 R7 C8 R2 R4 R6 C7
Q2
Q1
D4
D5
C4
C3
R1
C5
C6
R18
L1
U2
U1
L2
C2
R21
R20
D1
C1
S1
S2
BAT-
BAT+
U3
C15
R9
R10
Q3
C11
R13
R14
D2
D3
R19
R17
R16
FT-Z01-V4.0

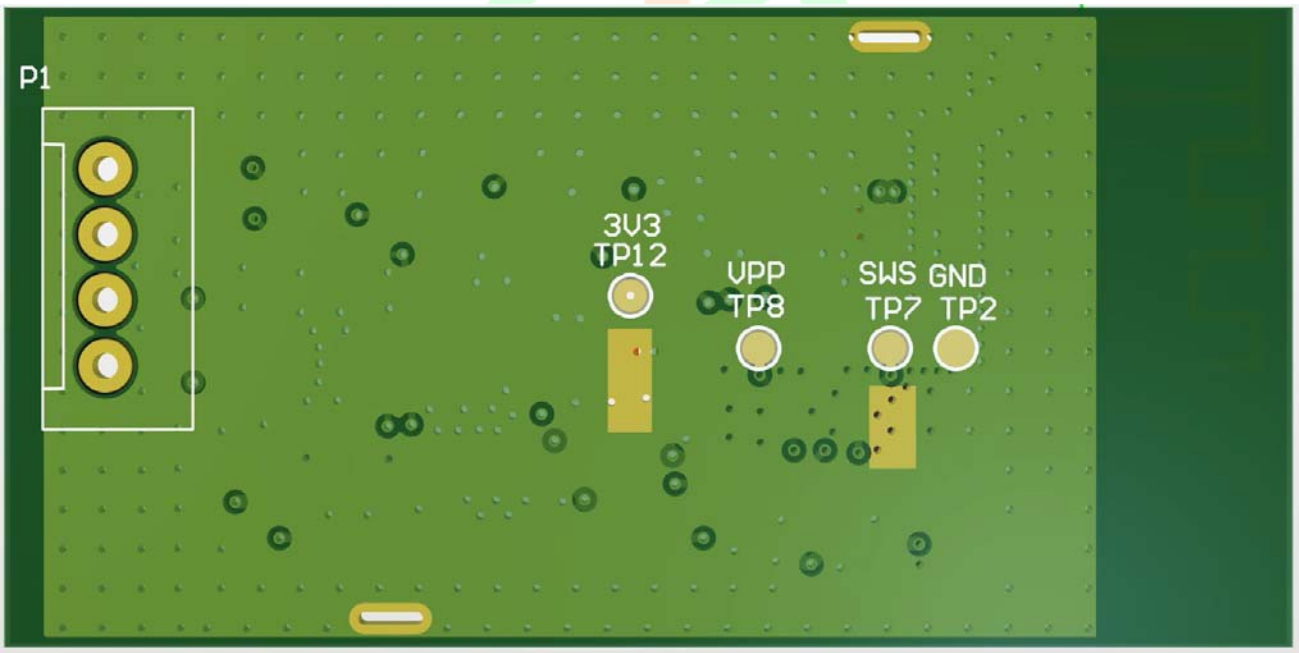
P1
3V3
TP12
VPP
TP8
SWS
TP7
GND
TP2

8 Appendix: declaration

FCC warning:

Any Changes or modifications not expressly approved by the party responsible for compliance could void the user's authority to operate the equipment.

Note: This equipment has been tested and found to comply with the limits for a Class B digital device, pursuant to part 15 of the FCC Rules. These limits are designed to provide reasonable protection against harmful interference in a residential installation. This equipment generates uses and can radiate radio frequency energy and, if not installed and used in accordance with the instructions, may cause harmful interference to radio communications. However, there is no guarantee that interference will not occur in a particular installation. If this equipment does cause harmful interference to radio or television reception, which can be determined by turning the equipment off and on, the user is encouraged to try to correct the interference by one or more of the following measures:

-Reorient or relocate the receiving antenna.

-Increase the separation between the equipment and receiver.

-Connect the equipment into an outlet on a circuit different from that to which the receiver is connected.

-Consult the dealer or an experienced radio/TV technician for help.

This equipment complies with FCC radiation exposure limits set forth for an uncontrolled environment. This equipment should be installed and operated with minimum distance 20cm between the radiator & your body.

The OEM must comply with the FCC labeling requirements. If the module's label is not visible when installed, then an additional permanent label must be applied on the outside of the finished product which states:"Contains transmitter module FCC ID: 2BCN8-Z01

This radio module must not be installed to co-locate and operating simultaneously with other radios
in the host system except following FCC multi-transmitter product procedures. Additional testing and
device authorization may be required to operate simultaneously with other radios.
The availability of some specific channels and/or operational frequency bands are country dependent
and are firmware programmed at the factory to match the intended destination. The firmware setting
is not accessible by the end-user.
The host product manufacturer is responsible for compliance with any other FCC rules that apply to the host not covered by the modular transmitter grant of certification. The final host product still requires Part 15 Subpart B compliance testing with the modular transmitter installed.
The end-user manual shall include all required regulatory information/warnings as shown in this manual, including “This product must be installed and operated with a minimum distance of 20 cm between the radiator and user body”.

This device has got an FCC ID: 2BCN8-Z01. The end product must be labeled in a visible area with the following: "Contains Transmitter Module FCC ID: 2BCN8-Z01.
This device is intended only for OEM integrators under the following conditions: The antenna must be installed such that 20cm is maintained between the antenna and users, and the transmitter module may not be co-located with any other transmitter or antenna.
As long as the 2 conditions above are met, further transmitter tests will not be required. However, the OEM integrator is still responsible for testing their end-product for any additional compliance requirements required with this module installed

IC warning

- English:

This device complies with Industry Canada licence-exempt RSS standard(s).

Operation is subject to the following two conditions: (1) This device may not cause interference, and (2) This device must accept any interference, including interference that may cause undesired operation of the device.

- French:

Le présentappareilestconforme aux CNR d'Industrie Canada applicables aux appareils radio exempts de licence. L'exploitationestautorisée aux deux conditions suivantes:

(1) l'appareil ne doit pas produire de brouillage, et
(2) l'utilisateur de l'appareildoit accepter tout brouillageradioélectriquesubi, mêmesi le brouillageest susceptible d'encompromettre le fonctionnement.

The device has been evaluated to meet general RF exposure requirement. The device can be used in portable exposure condition without restriction.

L'appareil a été évalué pour répondre aux exigences générales d'exposition aux RF. Le dispositif peut être utilisé dans des conditions d'exposition portatives sans restriction.

The ISED certification label of a module shall be clearly visible at all times when installed in the host product;

the host product must be labelled to display the ISED certification number for the module, preceded by the

word "contains" or similar wording expressing the same meaning, as follows: Contains IC: 31253-Z01

1. The module is limited to OEM installation ONLY

2. The OEM integrators is responsible for ensuring that the end-user has

no manual instructions to remove or install module.

3. That module is limited to installation in mobile or fixed applications,

according to Part 2.1091(b).

4. That separate approval is required for all other operating

configurations, including portable configurations with respect to Part

2.1093 and different antenna configurations.

9 Revise

版本	修订项	修订人	修订时间	备注
V1.10	修改文档格式	Bob.xu	20230202	