MyForm Product Specification (Project Span)

TTC, NHT, ILM
23/11/2023

cobalt

THROUGH MOUNT VARIATION

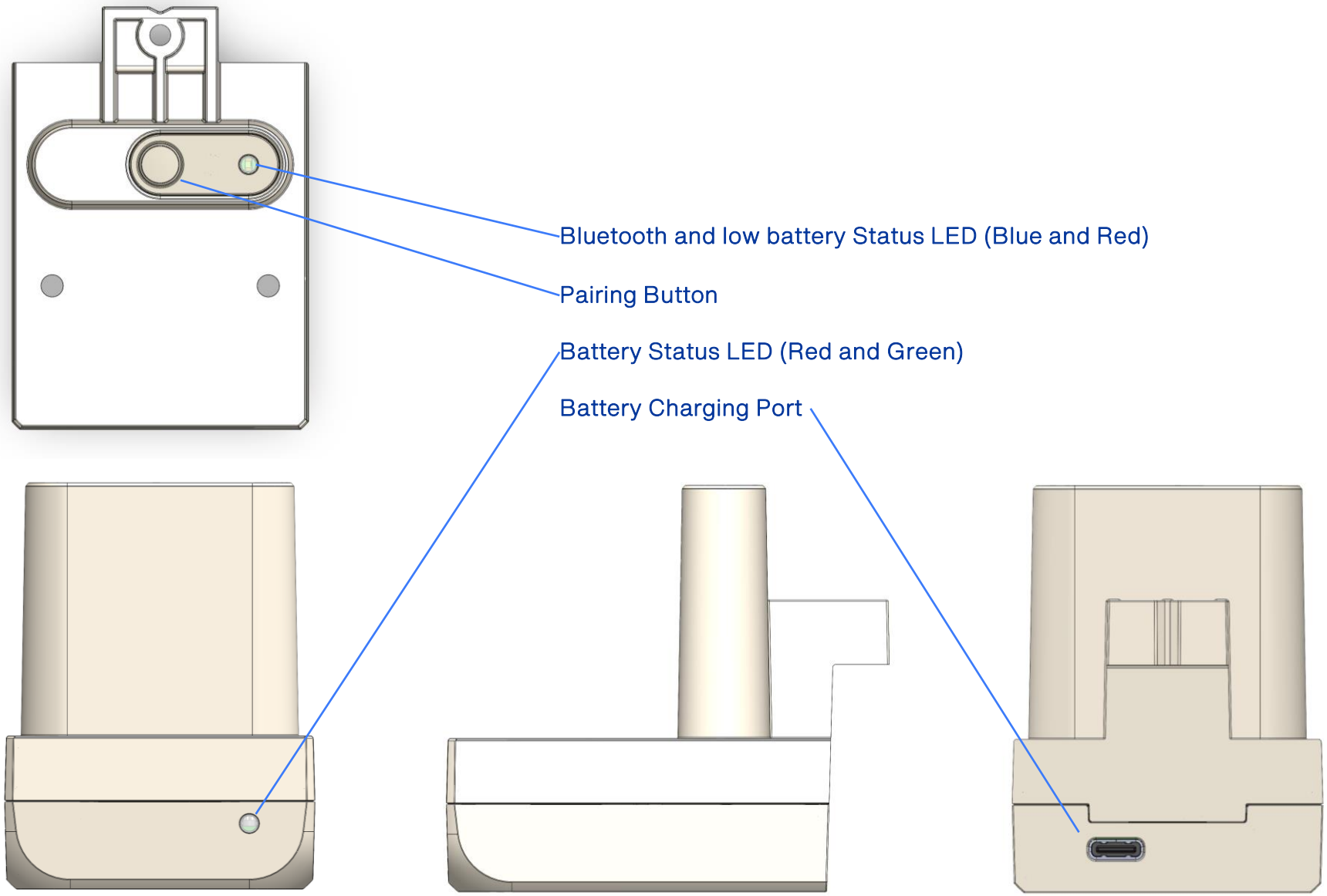

FRONT MOUNT VARIATION

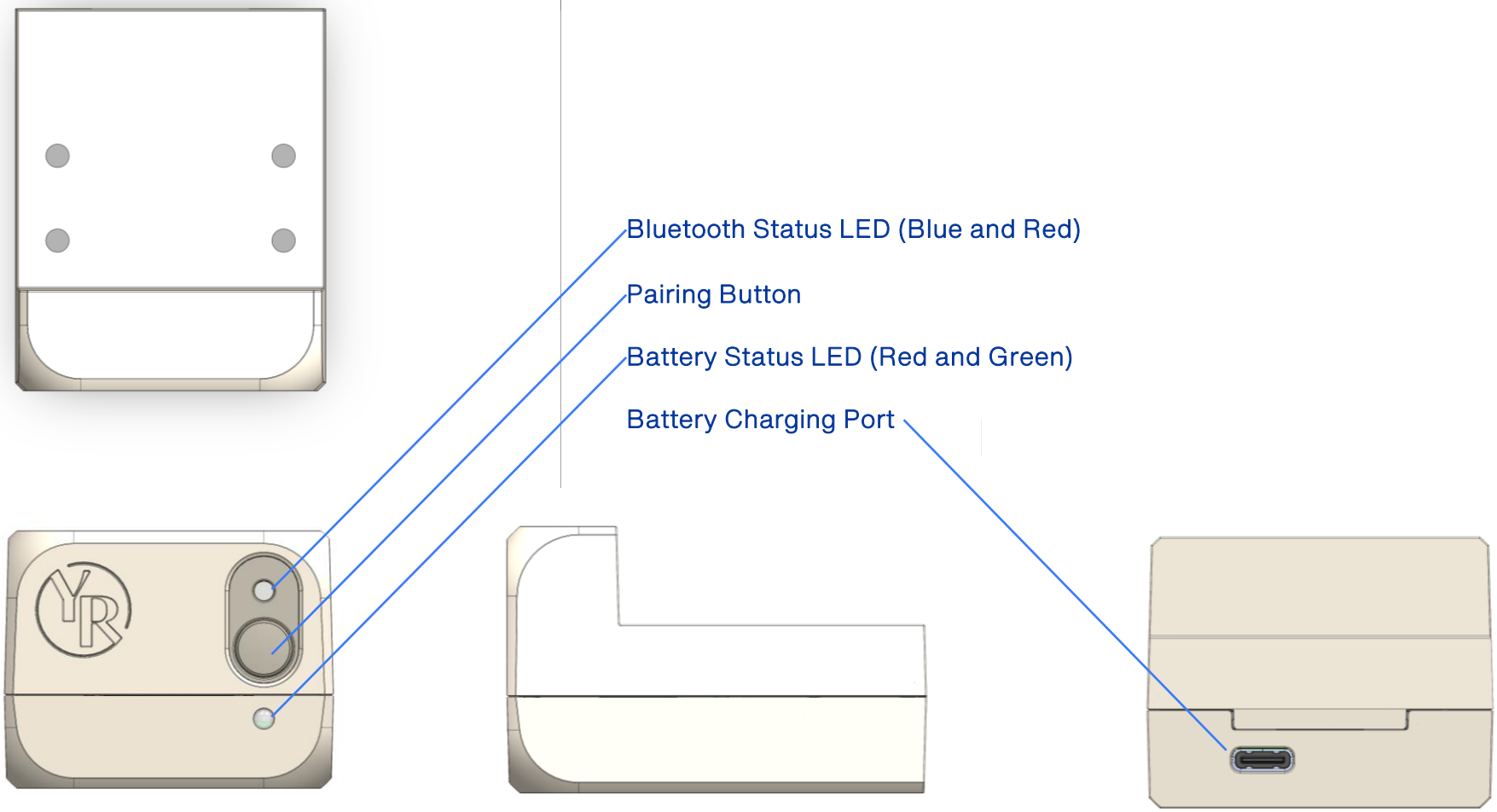

902 HOUSING UPPER THROUGH

SPAN-012_HOUSING_UPPER_THROUGH_Button_Insert

SPAN-008_HOUSING_UPPER_THROUGH_Button

SPAN-013_HOUSING_UPPER_THROUGH_Light_Pipe

SPAN-005_HOUSING_UPPER_THROUGH_Body

SPAN-P01-MAIN-BD

SPAN-006_HOUSING_UPPER_Base

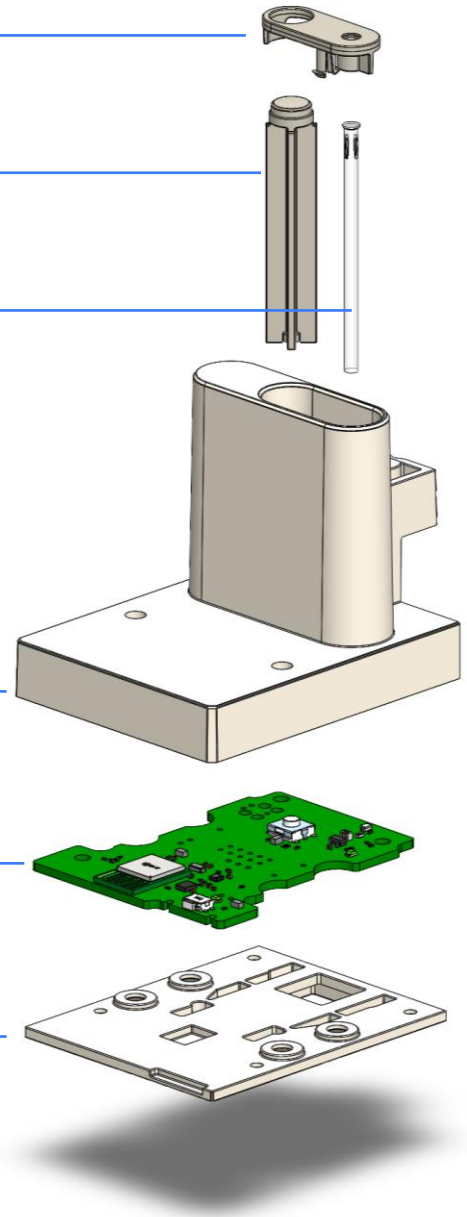

903 HOUSING UPPER FRONT

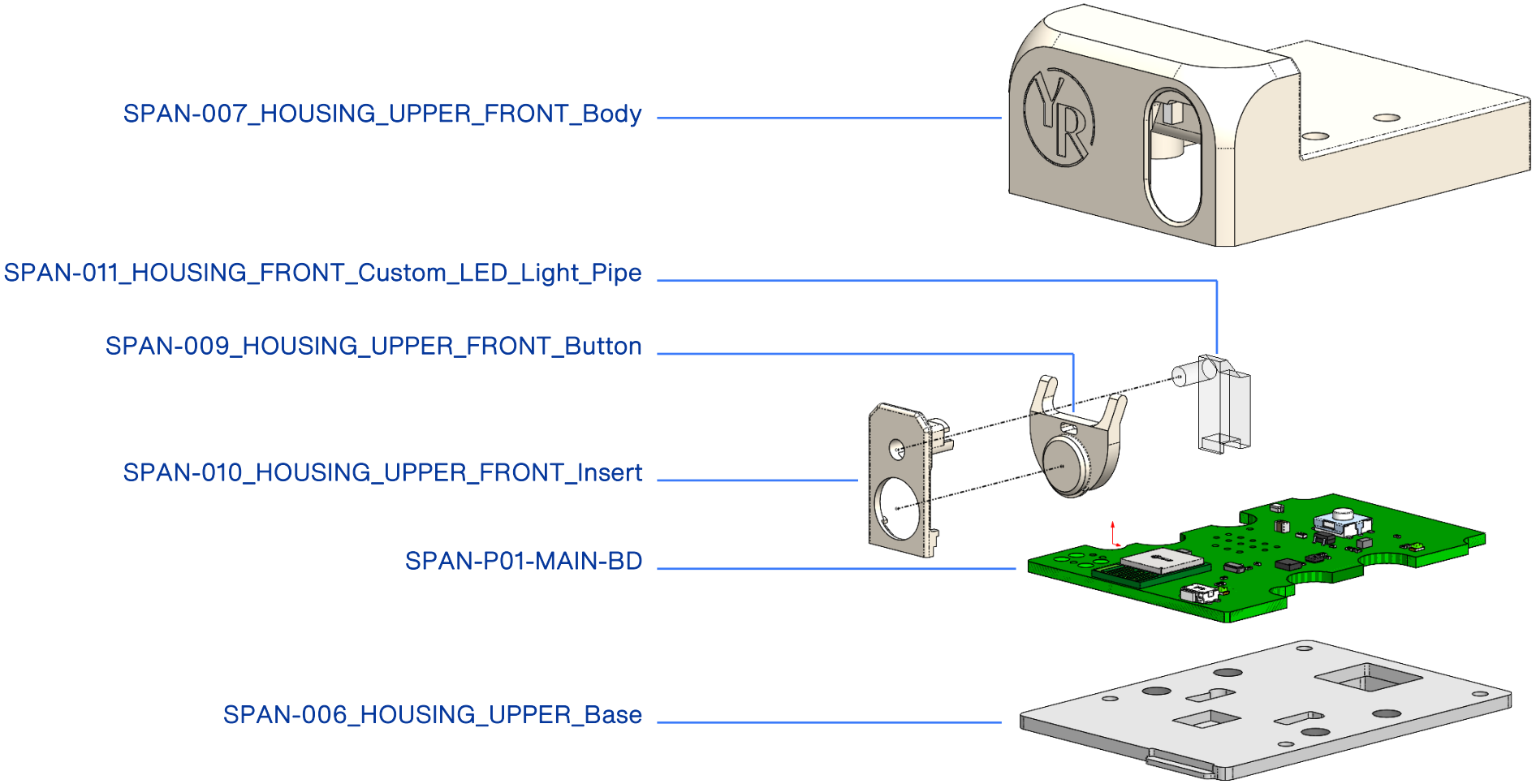

901 BATTERY MODULE

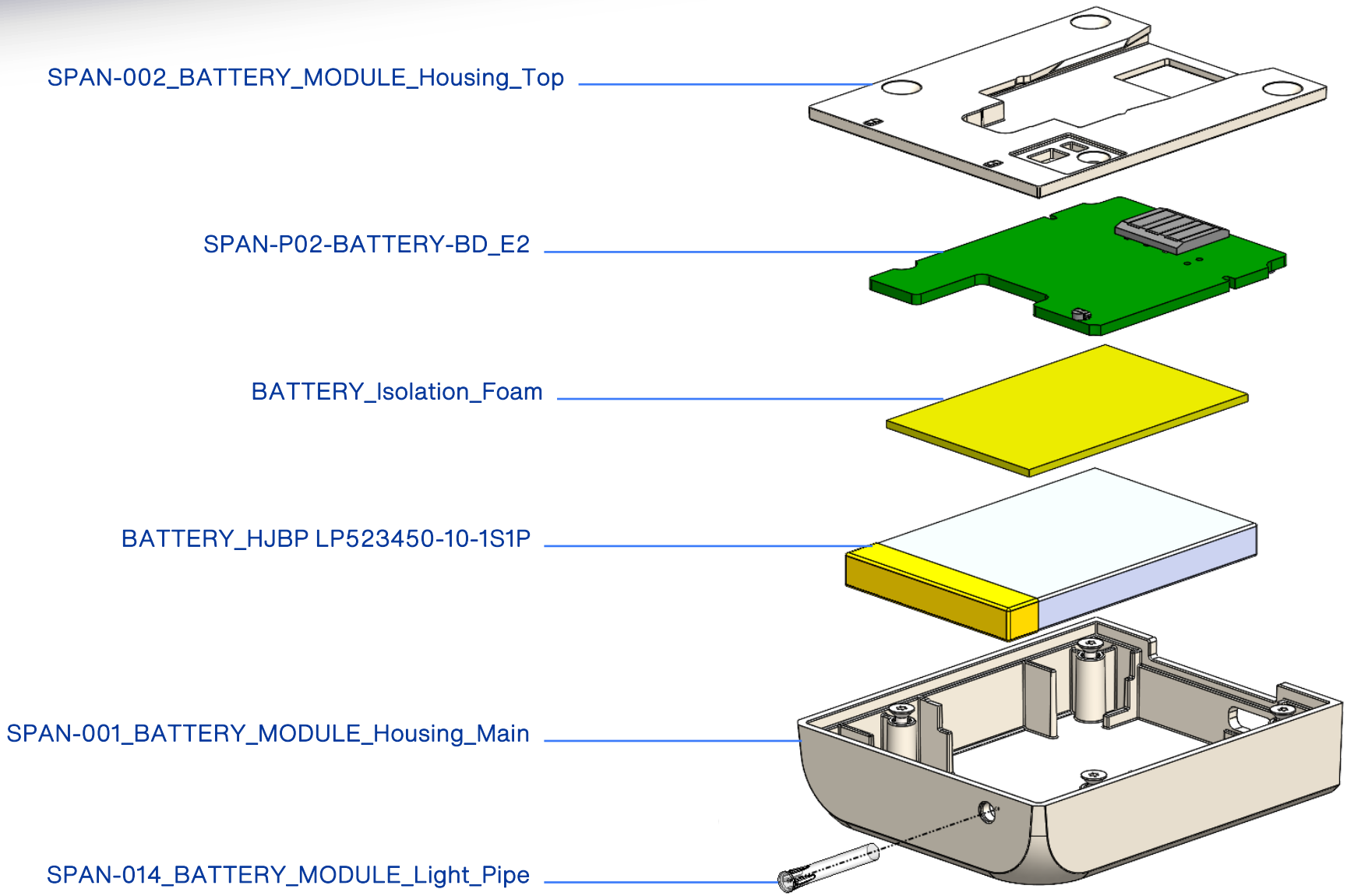

MAIN PCB – TOP LAYER

J3 : TC2030 for J-link

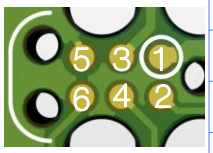

1	VIN	V input (3-5V)
2	SWDIO	SWDIO
3	Vref	3.0V (V out)
4	SWDCLK	SWDCLK
5	GND	GROUND
6	Reset	Reserved

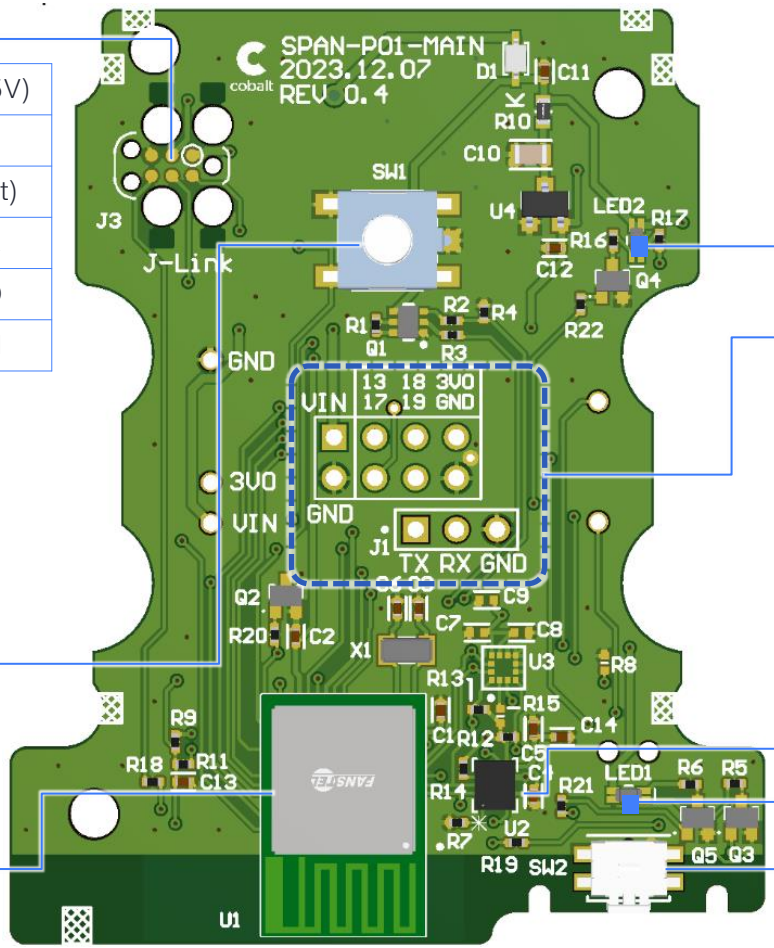

LED 1 : Secondary Blue LED (for alternate implementation)

Reserved connectors for internal test purpose

Secondary Tact Switch (for alternate implementation)

U2 : BMI270 Accelerometer

LED2 : Blue LED

BLE module

SW2 : Tact switch

MAIN PCB – BOTTOM LAYER

J2 : Battery contacts

1	N/C	-
2	GND	Ground
3	VCC	VBAT (3.0 – 4.2V)

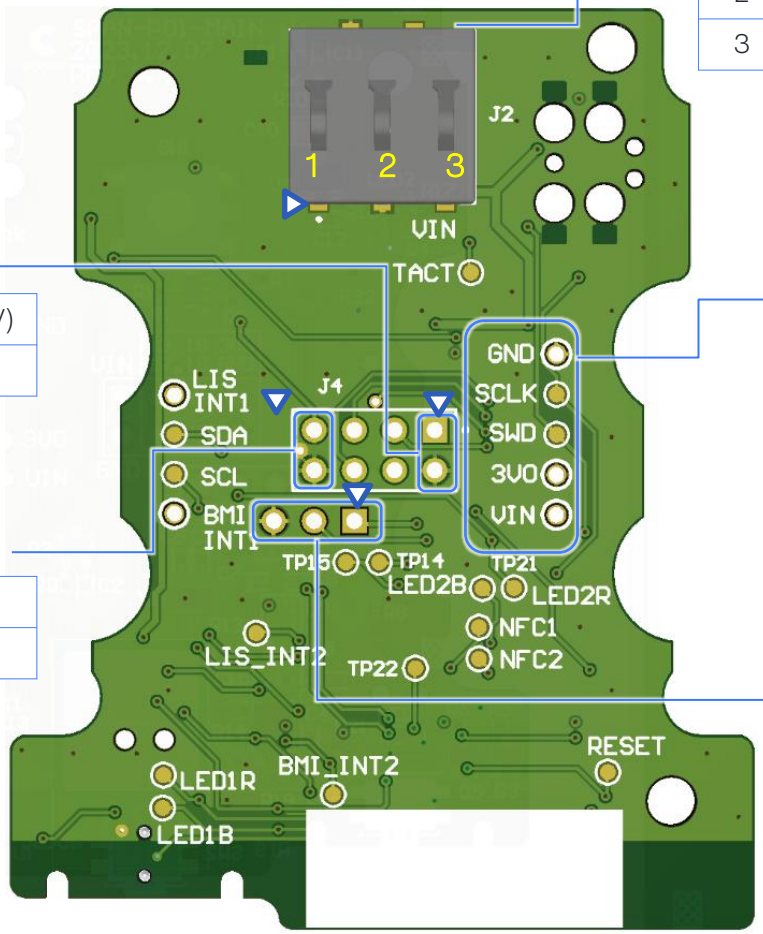

Input voltage

1	VIN	VBAT (3.0 – 4.2V)
2	GND	Ground

ISP Connector

TP9	GND	GROUND
TP16	SCLK	SWDCLK
TP17	SWD	SWDIO
TP10	3V0	Vref (V out : 3V0)
TP12	VIN	V input (3 -5V)

Regulator output voltage

1	3V0	3.0V output
2	GND	Ground

J1 : UART

1	TXD	UART-TX
2	RXD	UART-RX
3	GND	Ground

BATTERY PCB – TOP LAYER

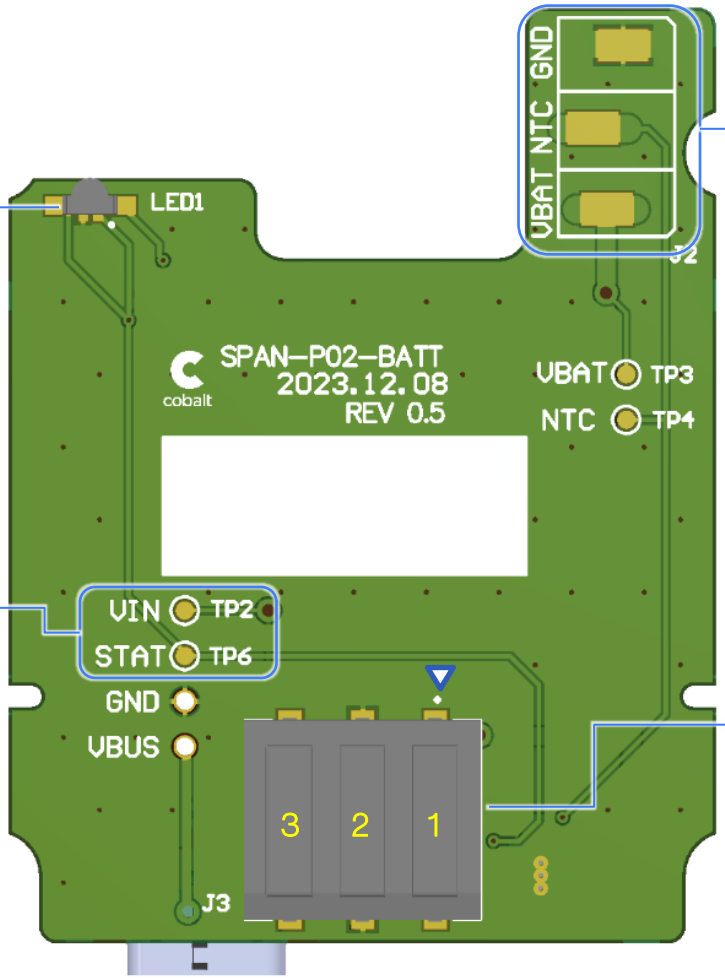

J2 : Battery connector

1	VBAT	Battery +
2	NTC	NTC (10k, B=3435)
3	GND	Battery -

LED1 : Battery status LED
Green : Fully charged
Red : Being charged

Test points for U1 charger IC

1	VIN	V input to U1
2	STAT	U1 Status

J3 : Mainboard contacts

1	VBAT	Battery +
2	GND	Ground
3	N/C	-

BATTERY PCB – BOTTOM LAYER

Bottom View

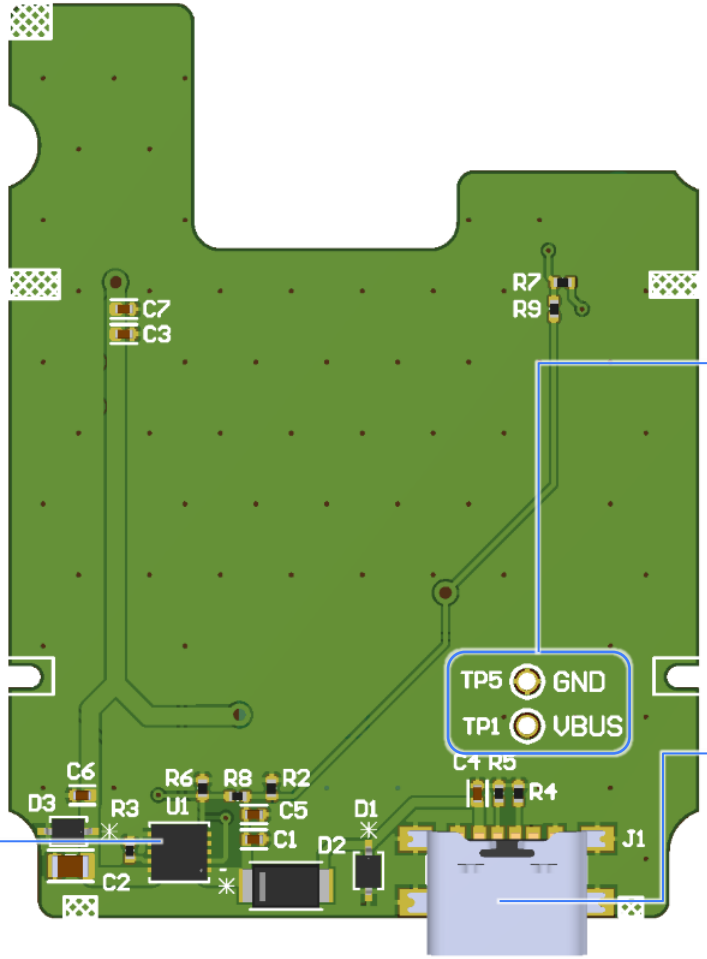

ICP Connector

TP5	GND	GROUND
TP1	VBUS	USB input voltage (5V)

U1 : MP26029
Battery Charger IC
Max 1A
(Setting : 0.5A)

J1 : SMD USB-C
Connector
(Power only)

USER INTERFACE - THROUGH MOUNT VARIATION

Pairing Button
Manually activates pairing mode

Bluetooth Status LED
- Turns on for 1 second when battery connected
- In pairing mode Blinks once every 500ms in pairing mode for 1 minute, or until successfully paired
- Blinks SOS pattern when hardware error detected (cannot access accelerometer)

Battery Status LED
Shows red when plugged in and charging
Shows green plugged in and fully charged

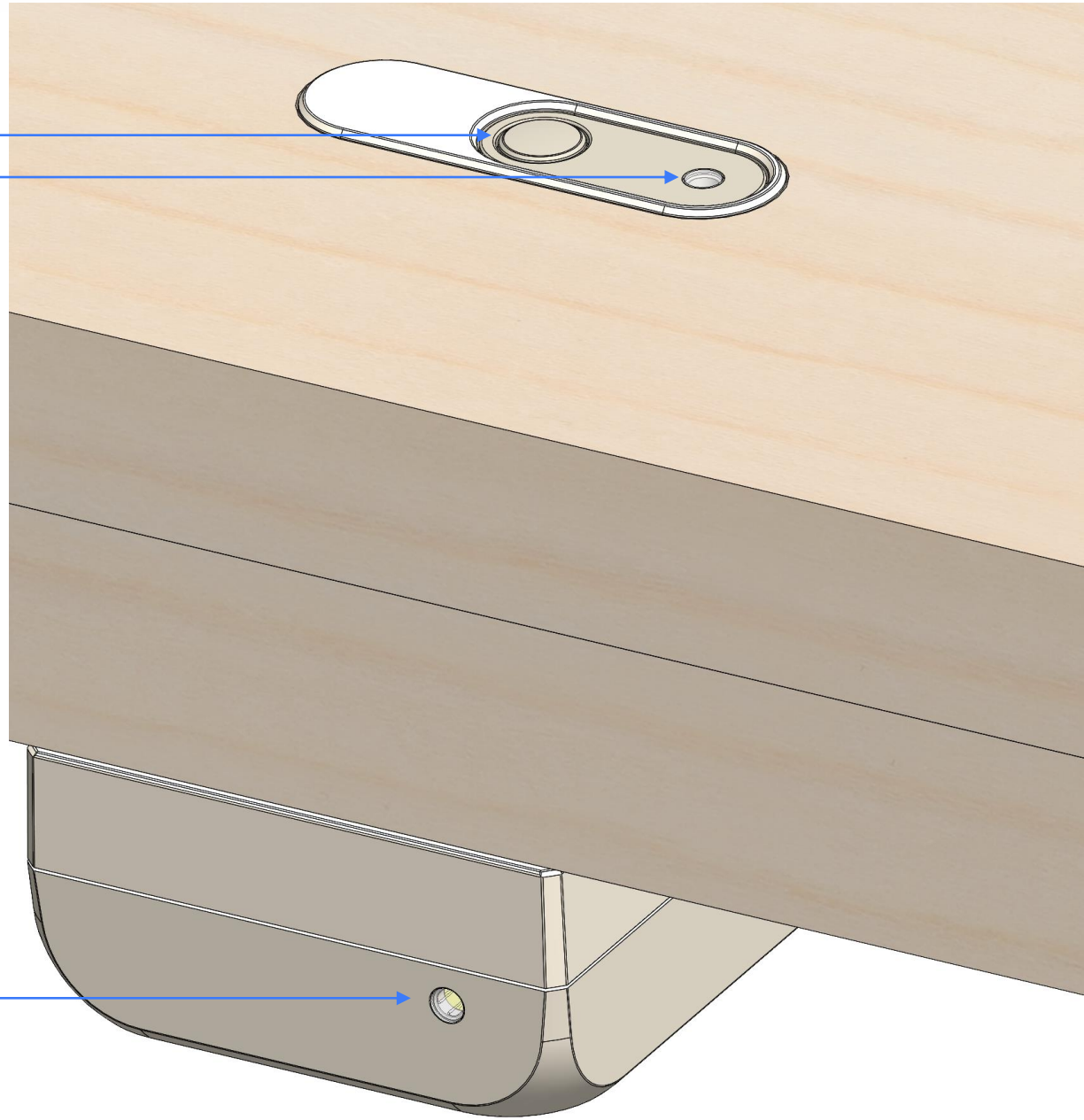

USER INTERFACE - FRONT MOUNT VARIATION

Bluetooth Status LED

- Turns on for 1 second when battery connected
- In pairing mode Blinks once every 500ms in pairing mode for 1 minute, or until successfully paired
- Blinks SOS pattern when hardware error detected (cannot access accelerometer)

Pairing Button

Manually activates pairing mode

Battery Status LED

Shows red when plugged in and charging
Shows green plugged in and fully charged

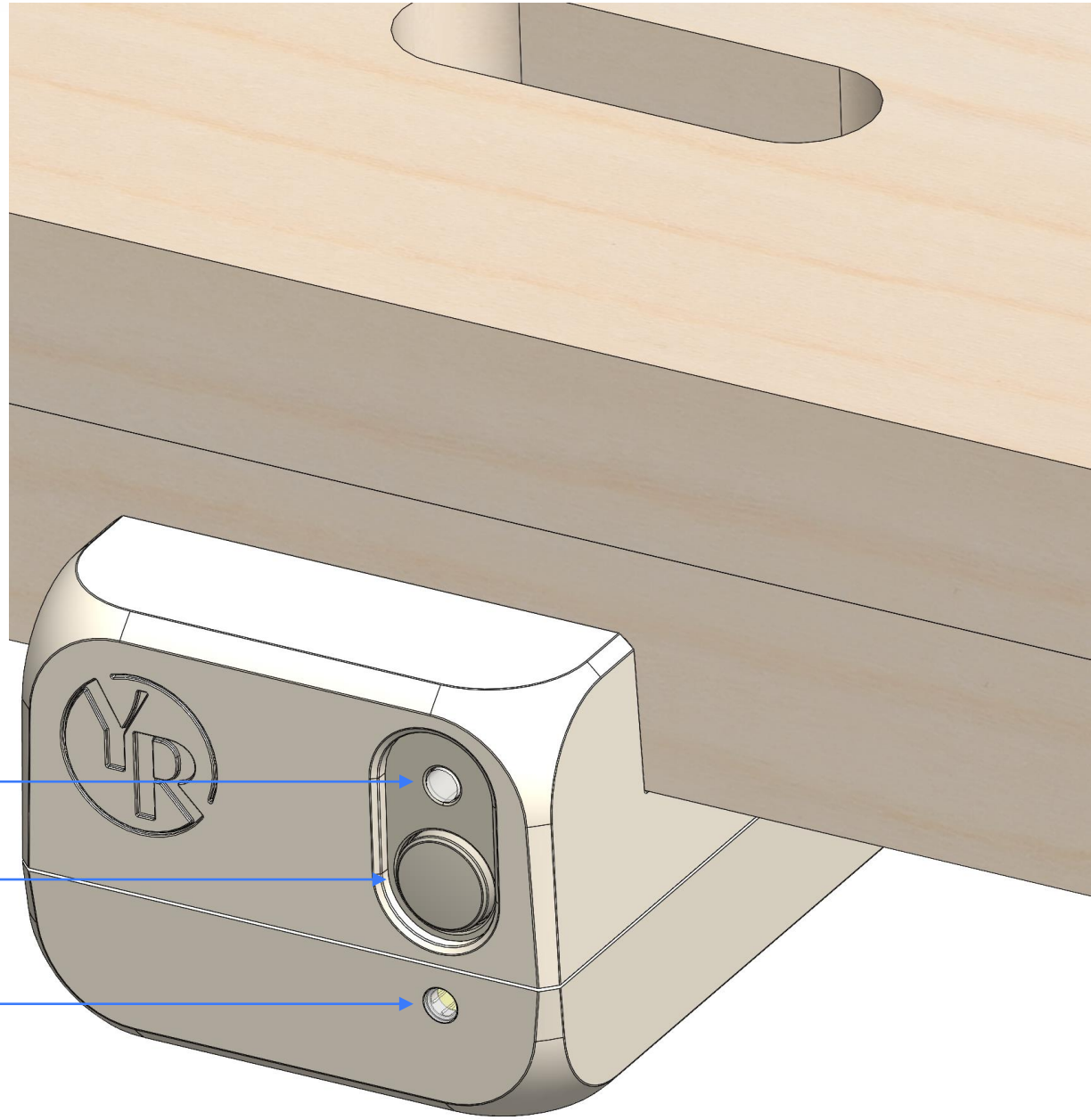

SPECIFICATIONS

Attribute		*Value*	***Remark***
Power	Charging input Voltage / Current	5V / 0.5A	USB-C connector
	Digital I/O voltage	3.0V	
	Charger IC	MP26029GQ-XXXX-Z	Li-ion charger (Max 1A)
Battery capacity	Battery voltage range	3.0 – 4.2V	
	Battery cut-off threshold	3.0V	
	Battery capacity	1000mAh	
Current consumption	Sleep	Less than 0.05mA	
	Advertising	0.05 – 0.08mA	
	Connection	1.7 – 2.2mA	
Main platform	BLE Module	BM832-P	Fanstel
	BLE SoC	nRF52832	Nordic Semiconductor
	Flash	512KB	
	RAM	64KB	
	Core	64 MHz Cortex-M4 with FPU	
Connectivity		Bluetooth Low Energy	2.4GHz ISM band
Battery pack Indicator	Green / Red dual LED	Green : Vf = max 2.5V, If = 30mA Red : Vf = max 2.5V, If = 30mA	Iv = 80 – 200mcd
Main module indicator	Blue / Red dual LED	Blue : Vf = max 3.4V, If = 2mA, Red : Vf = max 2.5V, f = 2mA	Iv = 20 -36mcd

FIRMWARE PROGRAMMING

0 - Preparation

1) SEGGER J-LINK
2) 5PIN – 2.5mm pitch Pogo probe (or TAC2030)
3) Firmware package
4) Laptop and nRF Connect for Desktop (Programmer)

1. Option 1 : Tag connect TAC2030

1) The main board has the Tag connect interface on the top layer.
2) Before connecting TAC2030, check the pin description of J3 and J-Link
3) Refer to the below example wiring diagram.

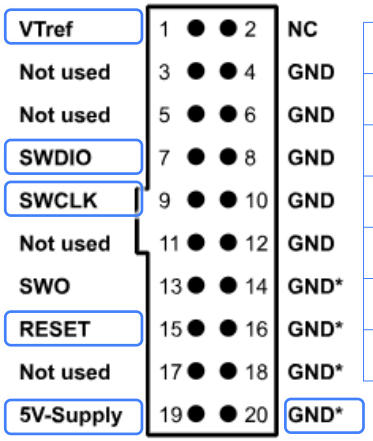

Pin	Description
19	VIN
7	SWDIO
1	Vref
9	SWDCLK
20	GND
15	Reset

J3 for TAC2030 connect

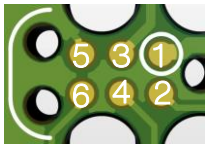

1	VIN	V input (3-5V)
2	SWDIO	SWDIO
3	Vref	3.0V (V out)
4	SWDCLK	SWDCLK
5	GND	GROUND
6	Reset	Reserved

TOP LAYER

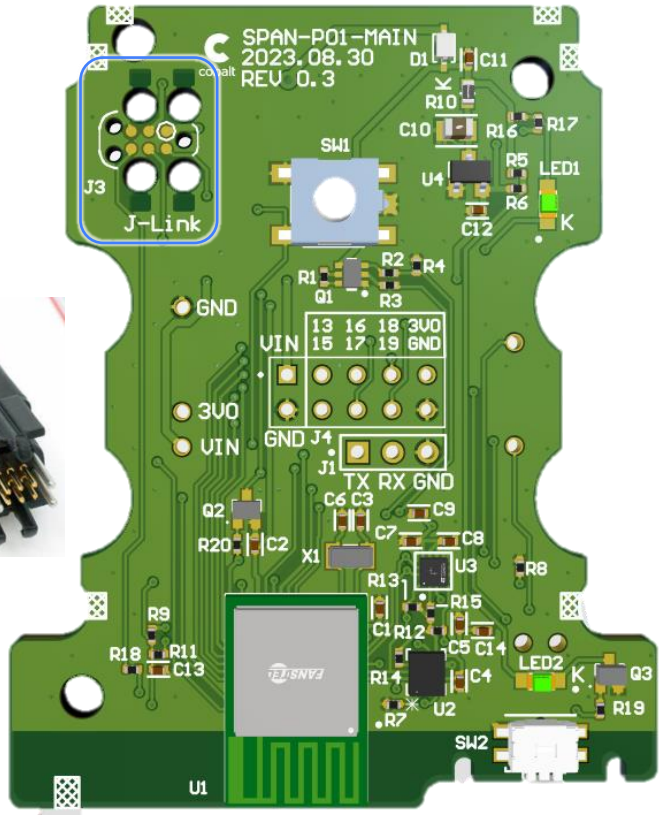

FIRMWARE PROGRAMMING

2. Option 2 : contacts for ISP

1) The bottom layer also has the ISP contact for firmware programming.
2) They are designed for ICT jig.
3) If ICT jig doesn't have the programming feature, Pogo probe can be used.
3) Refer to the below example wiring diagram.

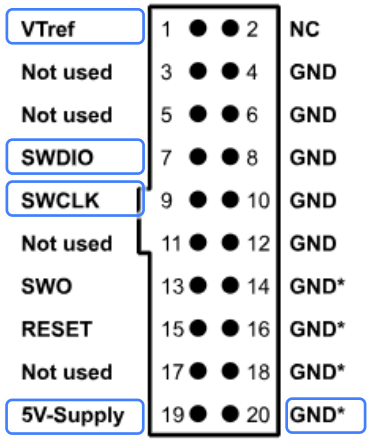

Pin	Description
20	Ground
9	SWDCLK
7	SWDIO
1	VTref
19	5V-Supply

Pogo probe

TP	Signal	Descro[topm
9	GND	GROUND
16	SCLK	SWDCLK
17	SWD	SWDIO
10	3V0	Vref (V out : 3V0)
12	VIN	V input (3 -5V)

BOTTOM LAYER

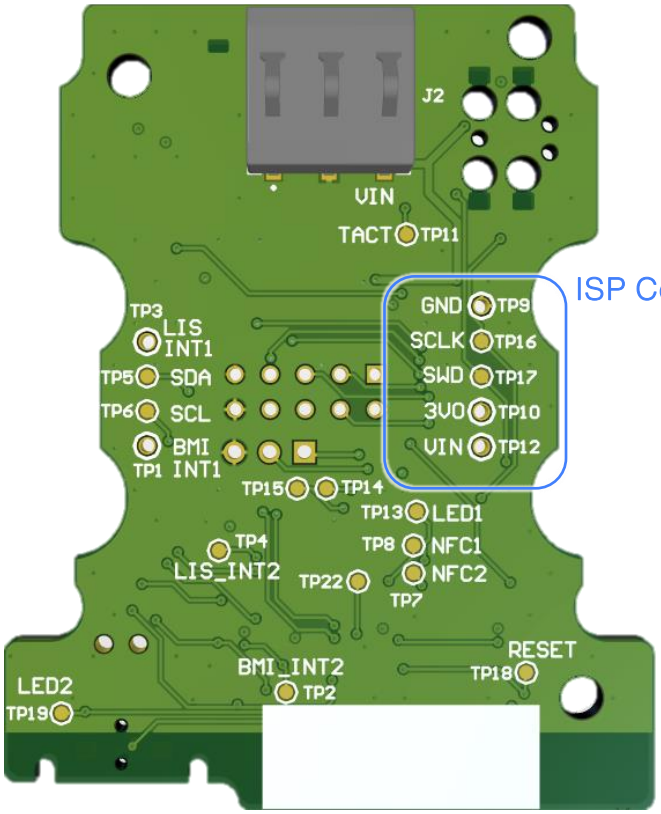

FIRMWARE PROGRAMMING

3 – Running nRF Connect for Desktop and Programmer

1) Connect the Segger J-Link to the device

2) Run nRF Connect for Desktop and run Programmer

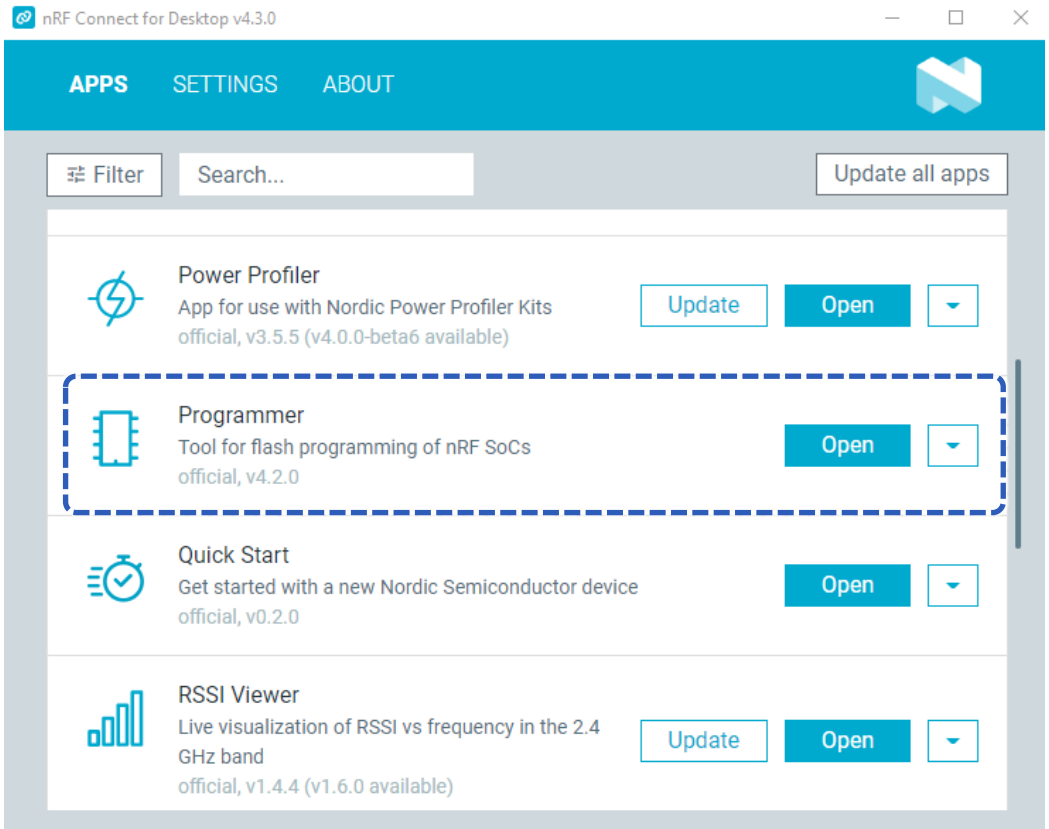

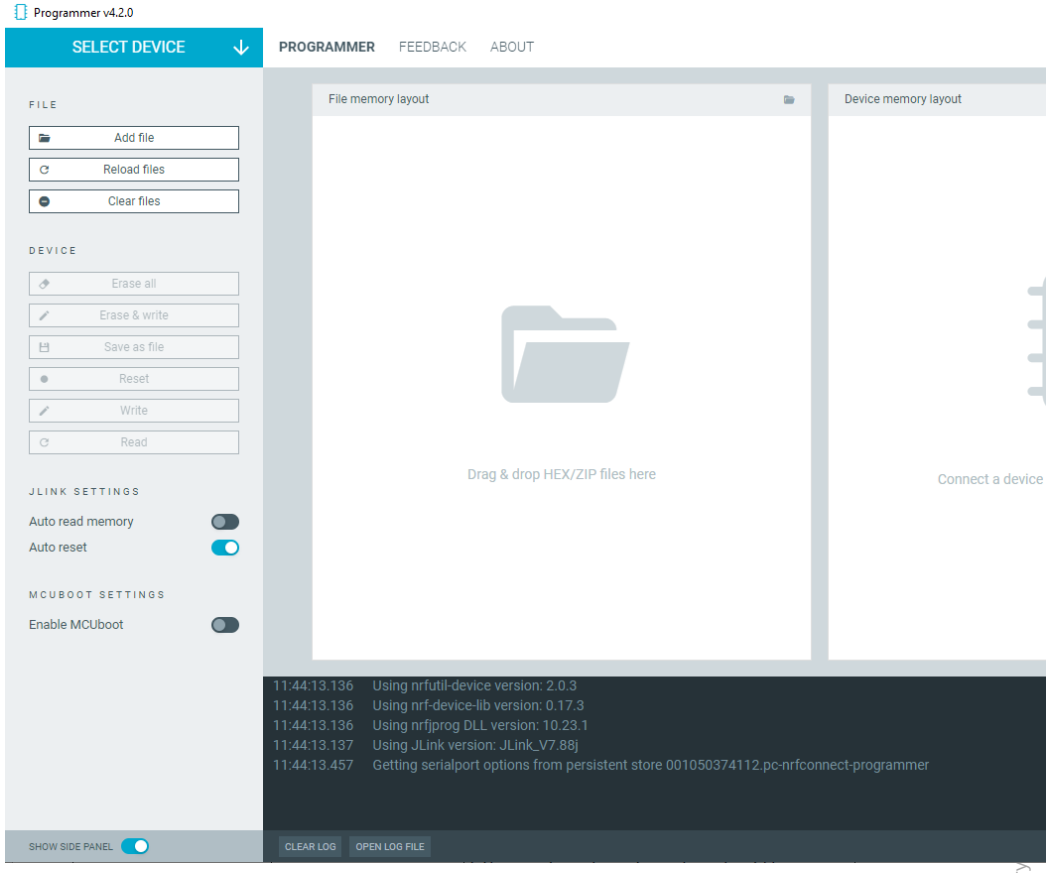

FIRMWARE PROGRAMMING

4 – Generating Identity-out file

1) Check the “identity-base.bin” file if it is the latest version.

2) Check if “identity-out.bin” and “identity-out.hex” exist in the same folder. If yes, check the bin file if it was generated before and delete them.

3) Run identityMain.exe

4) Then, identity-out.bin and identity-out.hex will be generated.

5) For the serial data format, refer to the word file “SPAN_SN_CB_SPEC.docx”

Identity.bin	12/12/2023 7:06 PM
Identity.hex	12/12/2023 9:32 PM
Identity_Original.bin	12/12/2023 7:06 PM
Identity-base.bin	12/12/2023 7:06 PM
IdentityMain.exe	20/12/2023 5:11 PM
IdentityMain.zip	9/01/2024 9:50 AM
Identity-out.bin	9/01/2024 10:21 AM
Identity-out.hex	9/01/2024 10:21 AM

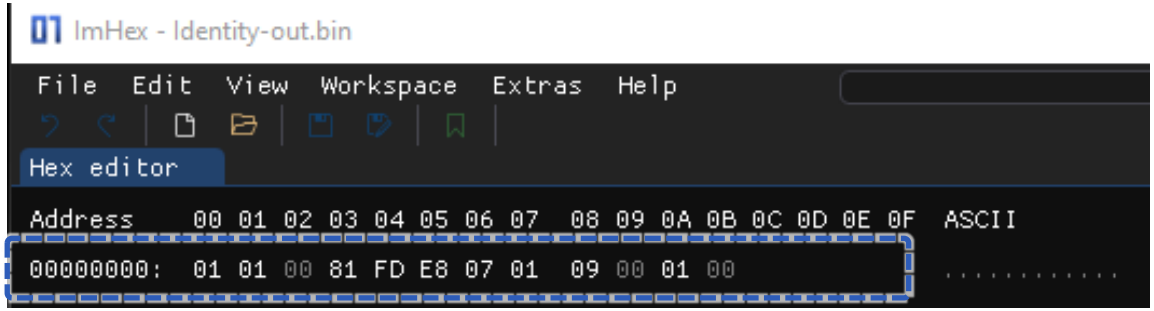

Identity-base.bin
Template file for the output

IdentityMain.exe
Executable file to generate the identity-out.bin and identity-out.hex file.

Identity-out.bin / identity-out.hex
Output file with serial data.
The information can be viewed with Hex editor.
Identity-out.hex is used during the firmware programming.

FIRMWARE PROGRAMMING

5 – Firmware setting

1) Connect the Segger J-Link to the device

2) Add the 3 firmware files to “File Memory layout”

Firmware and Bootloader

File name starts with
Firmware : “nrf52832_xxaa_yr_sensor_b17-with_bootloader_setting.hex”
Bootloader : nrf52832_xxaa_s132_yr_bl_b11.hex

* These file names will be updated according to the firmware revision.

Identity-out

File name : identity-out.hex

Softdevice

File name : s132_nrf52_x.x.x_softdevice.hex

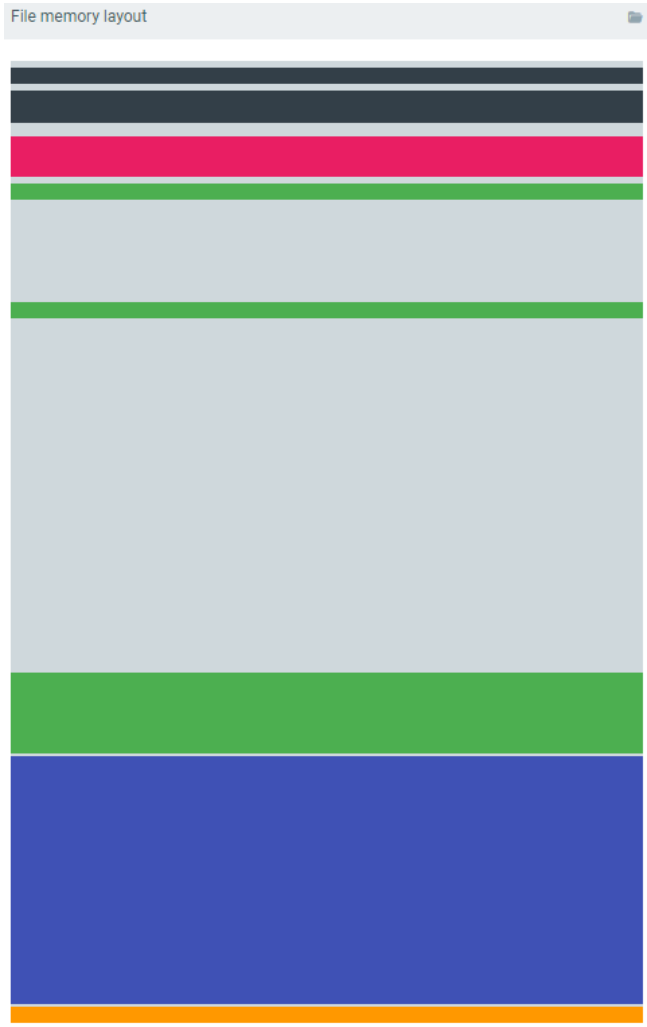

FIRMWARE PROGRAMMING

6 – Firmware programming

1) Click the “Erase & Write”
2) During the firmware programming, the device will be reset and 4 LEDs will blink once.
3) Check the log message when the firmware programming is done.

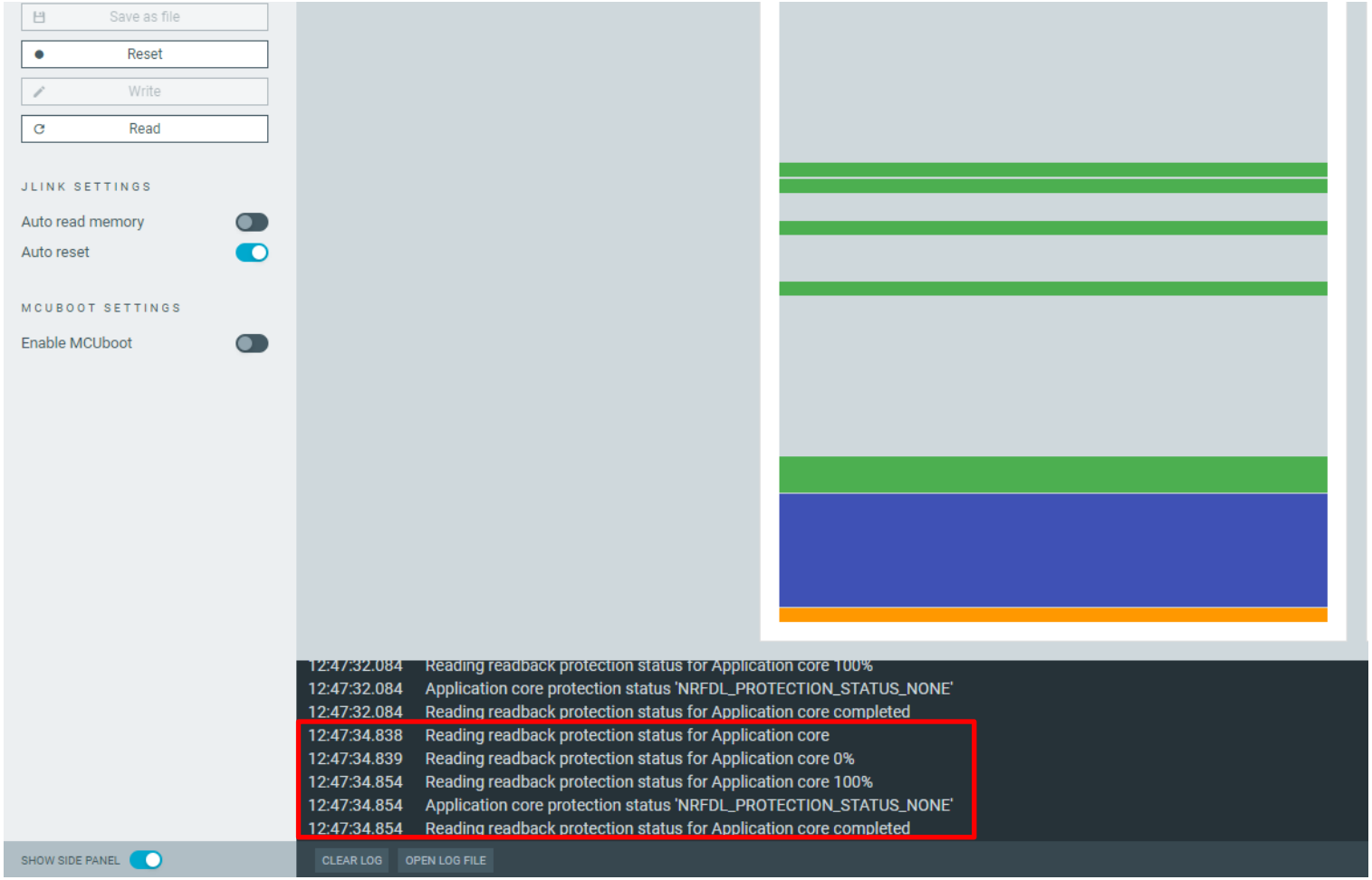

YOUR REFORMER

MyForm

Improve your form with real-time feedback.

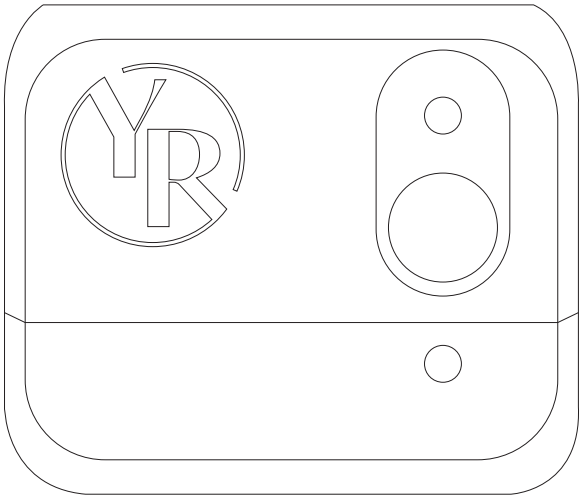

This cutting-edge device attaches to most reformer beds and seamlessly syncs with the Your Reformer App, giving you live feedback on consistency, control and speed, during your class.

- Real-time feedback for improved technique.
- Personalised goals for accountability.
- Easy-to-understand progress tracking.
- Hassle-free setup and syncing with Your Reformer App.
- Works with all Your Reformer beds and most other brands.
- Compact design for minimal distraction.

Items included
MyForm device, charging cable, double sided tape, screws.

Go to this link for our installation video.
yourreformer.com.au/myform-installation

INSTALLATION OPTION A: USING DOUBLE SIDED TAPE

①

Peel off one side of the double sided tape and place it on the top side of the MyForm device. Press the tape firmly.

②

Peel off the other side of the tape and place the MyForm device a maximum of 3cm away from the headrest (Image below). This makes sure that it doesn't hit the side of the bed frame or any stoppers when exercising. Press the device firmly for best results.

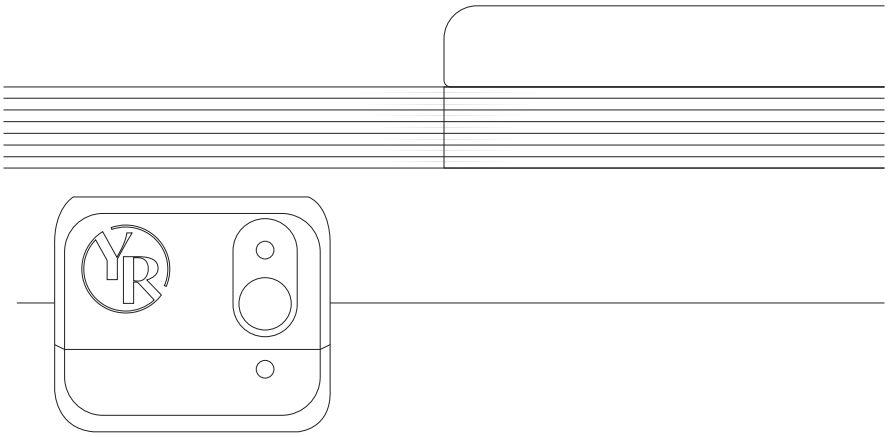

INSTALLATION OPTION B: USING SCREWS

Items needed
Cordless Drill

①

Take the MyForm out of the box, the bottom section of the device is the battery. Slide the battery forward to detach it from the MyForm tracker.

②

IMPORTANT: Ask for another person to help you with the lifting of the carriage.

Release all the springs, remove both shoulder rests and gently pull out the ropes from the grips. Place a clean cloth or towel next to the bed as you'll be placing the carriage on the ground. Make sure you and the other person slowly lift the carriage off the bed together with proper posture. Lift the carriage and place it on the ground with the upholstery facing down.

③

Place the MyForm tracker a maximum of 3cm away from the headrest (Image below). This makes sure that it doesn't hit the side of the bed frame or any stoppers when exercising.

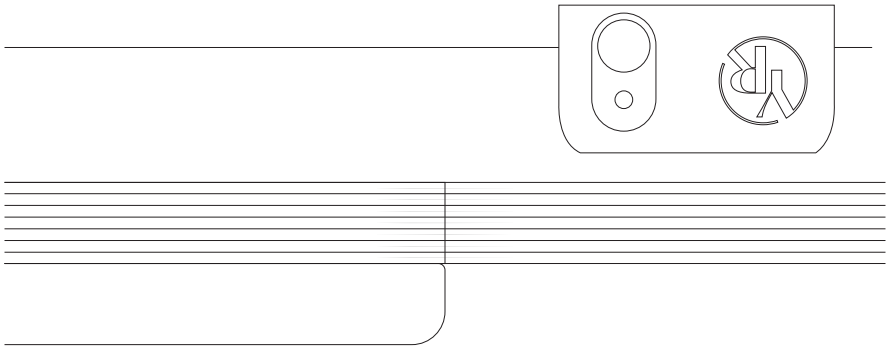

④

Using the cordless drill, carefully drill the four screws into the four holes on the MyForm tracker.

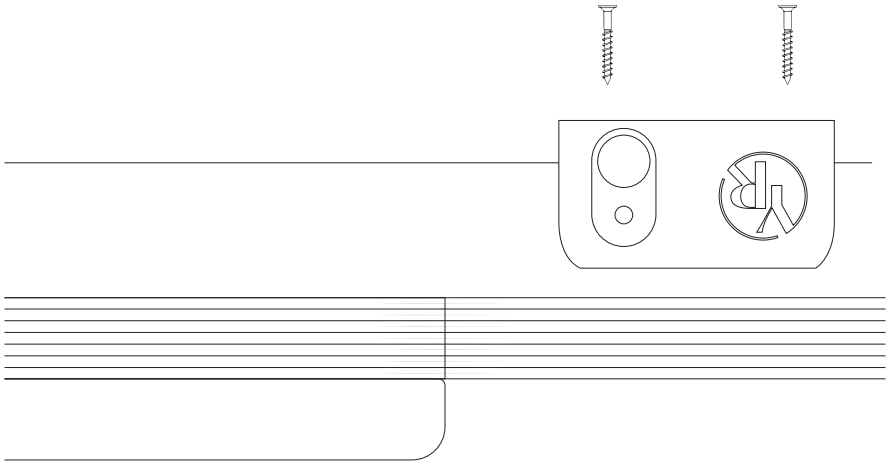

⑤

Once all the screws have been drilled in, carefully lift the carriage with the other person, and slowly place it on the bed frame like wit was before.

⑥

After the battery has been fully charged, slide it back into the MyForm tracker.

Go to this link for our warranty information.

yourreformer.com.au/myform-warranty

YOUR REFORMER

FCC Warnning:

This equipment has been tested and found to comply with the limits for a Class B digital device, pursuant to part 15 of the FCC Rules. These limits are designed to provide reasonable protection againstharmful interference in a residential installation. This equipment generates, uses and can radiateradio frequency energy and, if not installed and used in accordance with the instructions, maycause harmful interference to radio communications. However, there is no guarantee thatinterference will not occur in a particular installation. If this equipment does cause harmfulinterference to radio or television reception, which can be determined by turning the equipmentoff and on, the user is encouraged to try to correct the interference by one or more of thefollowing measures:

- Reorient or relocate the receiving antenna.
- Increase the separation between the equipment and receiver.
- Connect the equipment into an outlet on a circuit different from that to which the receiver is connected.
- Consult the dealer or an experienced radio/TV technician for help.

Caution: Any changes or modifications to this device not explicitly approved by manufacturer could void your authority to operate this equipment.

This device complies with part 15 of the FCC Rules. Operation is subject to the following two conditions:

(1)This device may not cause harmful interference, and (2) this device must accept any interference received, including interference that may cause undesired operation.

This equipment complies with FCC radiation exposure limits set forth for an uncontrolled environment. This equipment should be installed and operated with minimum distance 20cm between the radiator and your body.

ISED Statement

- English: This device contains licence-exempt transmitter(s)/receiver(s) that comply with Innovation, Science and Economic Development Canada's licence-exempt RSS(s). Operation is subject to the following two conditions:

(1) This device may not cause interference.

(2) This device must accept any interference, including interference that may cause undesired operation of the device.

- French:Cet appareil contient des émetteurs/récepteurs exempts de licence qui sont conformes aux CNR exempts de licence d'Innovation, Sciences et Développement économique Canada. Le fonctionnement est soumis aux deux conditions suivantes :

(1) Cet appareil ne doit pas causer d'interférences.

(2) Cet appareil doit accepter toute interférence, y compris les interférences susceptibles de provoquer un fonctionnement indésirable de l'appareil.

This device meets the exemption from the routine evaluation limits in section 2.5 of RSS 102 and compliance with RSS 102 RF exposure, users can obtain Canadian information on RF exposure and compliance.

cet appareil est conforme à l'exemption des limites d'évaluation courante dans la section 2.5 du cnr - 102 et conformité avec rss 102 de l'exposition aux rf, les utilisateurs peuvent obtenir des données canadiennes sur l'exposition aux champs rf et la conformité.

This equipment complies with Canada radiation exposure limits set forth for an uncontrolled environment.

This equipment should be installed and operated with minimum distance 20cm between the radiator & your body.

Cet équipement est conforme Canada limites d'exposition aux radiations dans un environnement non contrôlé.

Cet équipement doit être installé et utilisé avec une distance minimale de 20 cm entre le radiateur et votre corps.

Document Revision

Revision	Date	Description	Remark
1	24 Nov 2023	Preliminary Release	
2	9 JAN 2024	Updated with new PCB data, programming method	

cobalt