SMD CERAMIC ANTENNA
Data Sheet

CS-2450-16-C

For 2400-2483MHz

1.6x0.8mm [EIA1608]

Manufacture's Name:Shantou AIRUIKA Electronics Co., LTD

Address:Sixth Street, Zhongtai West District, Hengshan Village, Gurao Town, Chaoyang, Shantou City, Guangdong Province

特征 Feature

- 重量轻，结构紧凑 Light weight, compact
- 宽带大，低成本 Wide bandwidth, low cost
- 高增益内置天线 Built-in antenna with high gain
- 工作温度 Operating Temp. : -40℃~+85℃

应用 Application

- 蓝牙,无线局域网,移动电视 Bluetooth, Wireless LAN, Mobile TV
- 家用射频系统Home RF system, etc

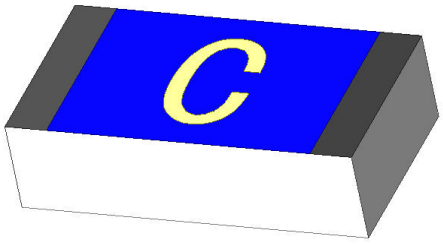

CS-2450-16-C

电气特性 Electrical Characteristics per line(TA=25℃)

参数Parameter	规格Specification	单位Units
频带 Frequency Band	2400~2483	MHz
极化 Polarization	Linear	
*峰值增益 Peak Gain	-0.4	dBi
*峰值效率 Peak Efficiency	66.5%	%
阻抗 Impendance	50	Ω

*测试条件：测试板尺寸98×65mm；匹配电路：π型匹配电路。Test condition: Test board size 98*65 mm; Matching circuit: Pi matching circuit will be required

典型特征 Typical Characteristics

Fig.1 驻波比 VSWR

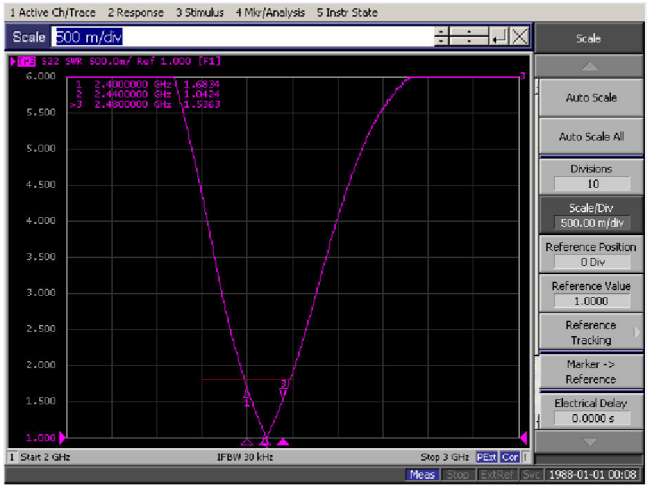

辐射模式 Radiation Pattern

增益模式是在暗室进行测试的，被测件放在桌肩位置，用标准的喇叭天线和矢量网络分析仪来收集数据。The Gain pattern is measured in FAR-field chamber. DUT is placed on the table of rotator，a standard horn antenna and Vector Network Analyzer is used to collect data.

Fig.2 暗室示意图

FAR-field Chamber

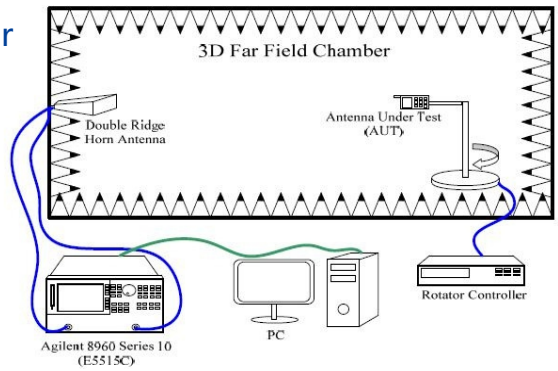

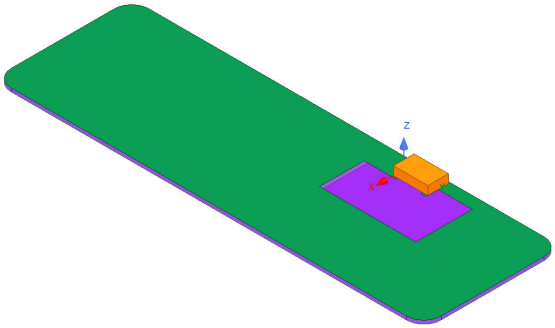

3D 增益模式

3D Gain Pattern (2400 MHz)

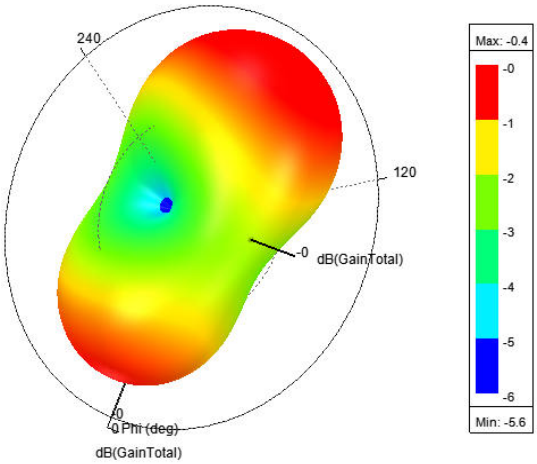

3D 增益模式
3D Gain Pattern (2450 MHz)

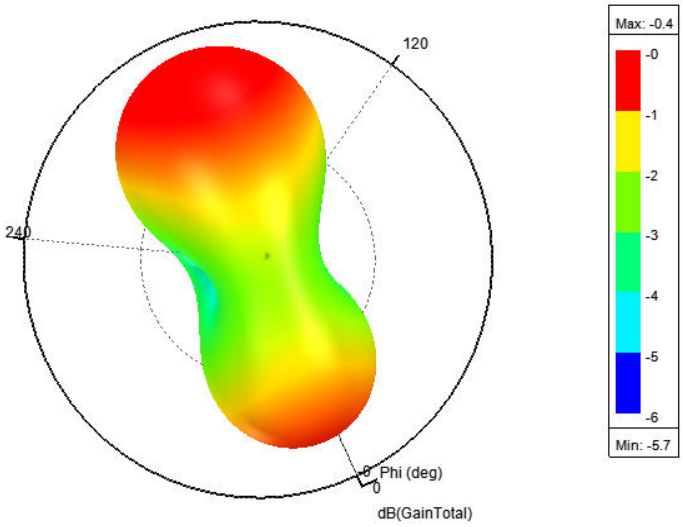

3D 增益模式
3D Gain Pattern (2500 MHz)

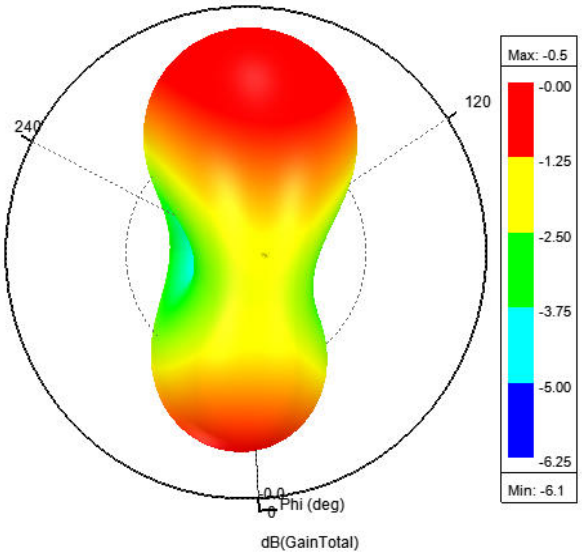

项目Item	环境Condition	规格Specification
热冲击 Thermal shock	1. 30±3 minutes at -40°C±5°C, 2. Convert to +105°C (5 minutes) 3. 30±3 minutes at +105°C±5°C, 4. Convert to -40°C (5 minutes) 5. Total 100 continuous cycles	No apparent damage Fulfill the electrical spec. after test.
抗湿性 Humidity resistance	1. Humidity: 85% R.H. 2. Temperature: 85±5°C 3. Time: 1000 hours.	No apparent damage Fulfill the electrical spec. after test.
耐高温性 High temperature resistance	No apparent damage Fulfill the electrical spec. after test.	1. Temperature: 150°C±5°C 2. Time: 1000 hours.
低温电阻 Low temperature resistance	1. Temperature: -40°C±5°C 2. Time: 1000 hours.	No apparent damage Fulfill the electrical spec. after test.
耐焊接热性 Soldering heat resistance	1. Solder bath temperature : 260±5℃ 2. Bathing time: 10±1 seconds	No apparent damage
焊锡性 Solderability	The dipped surface of the terminal shall be at least 95% covered with solder after dipped in solder bath of 245±5℃ for 3±1 seconds.	No apparent damage

(2) 储存环境 Storage Condition

(a)仓库：温度应在0～30℃之间，湿度应小于60%湿度，产品应在交货之日起1年内使用。At warehouse: The temperature should be within 0 ~ 30℃ and humidity should be less than 60% RH.The product should be used within 1 year from the time of elivery.

(b)在板：温度应在40～85℃之间，湿度应小于85%湿度。On board: The temperature should be within -40~85℃ and humidity should be less than 85% RH.

(3) 工作环境温度 Operating Temperature Range

工作温度范围：-40℃ to +85℃。 Operating temperature range : -40℃ to +85℃.

推荐回流焊接曲线 Recommended Reflow Solder curve

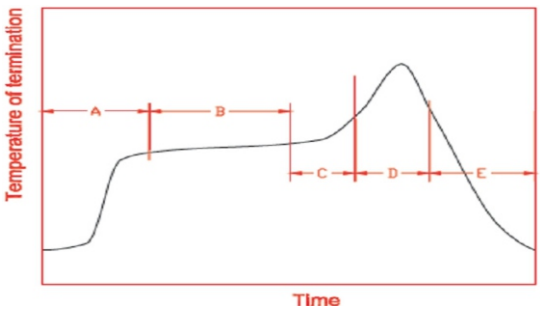

A	1st rising temperature	The normal to Preheating temperature	30s to 60s
B	Preheating	140℃ to 160℃	60s to 120s
C	2nd rising temperature	Preheating to 200℃	20s to 40s
D	Main heating	if 220℃	50s～60s
		if 230℃	40s～50s
		if 240℃	30s～40s
		if 250℃	20s～40s
		if 260℃	20s～40s
E	Regular cooling	200℃ to 100℃	1℃/s ～ 4℃/s

*reference: J-STD-020C

(1) 电烙铁的使用 Soldering Gun Procedure

以下注意事项仅针对使用电烙铁进行个别器件更换。

Note the follows, in case of using solder gun for replacement.

(a) 使用小于30W的电烙铁，温度不高于350°C，焊接时间小于3秒。

The tip temperature must be less than 350°C for the period within 3 seconds by using soldering gun under 30 W.

(b) 烙铁不可直接接触器件本体。

The soldering gun tip shall not touch this product directly.

(2) 焊锡量 Soldering Volume

注意焊接过程中过多的焊锡量会损害器件本体。

Note that excess of soldering volume will easily get crack the body of this product.

产品尺寸 Product Dimension

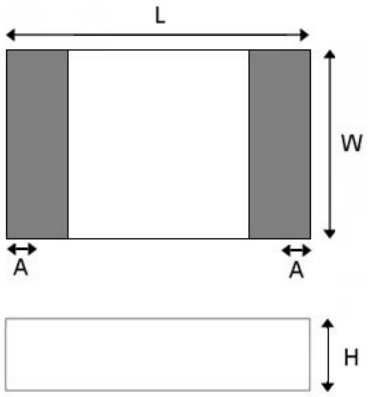

L	W	H	A
1.6±0.2	0.8±0.2	0.4±0.1	0.2±0.07

推荐焊盘&Evaluation Board

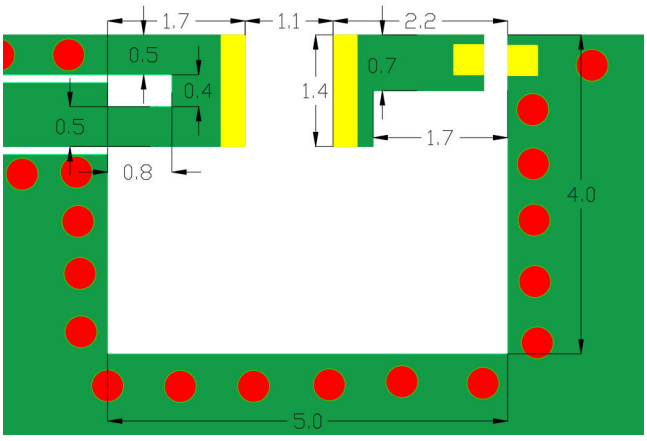

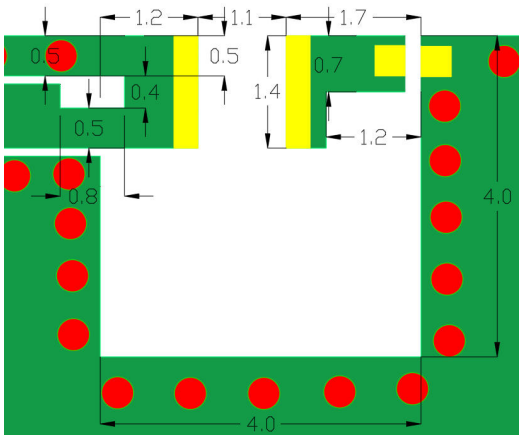

应用环境 Application Guide

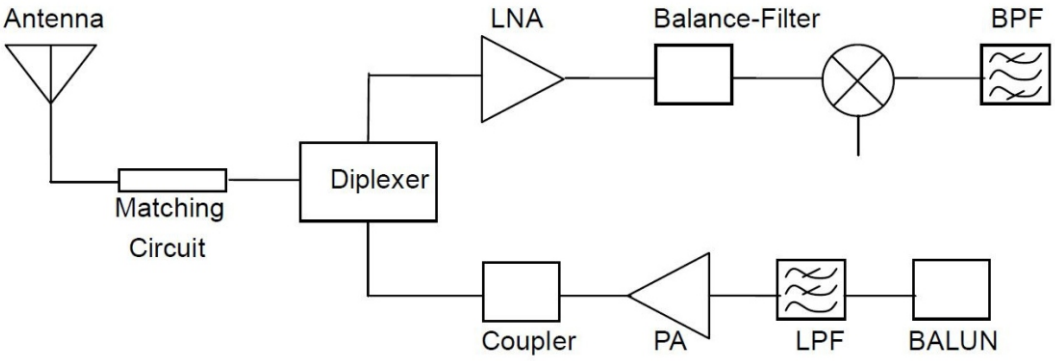

包装信息Package Information

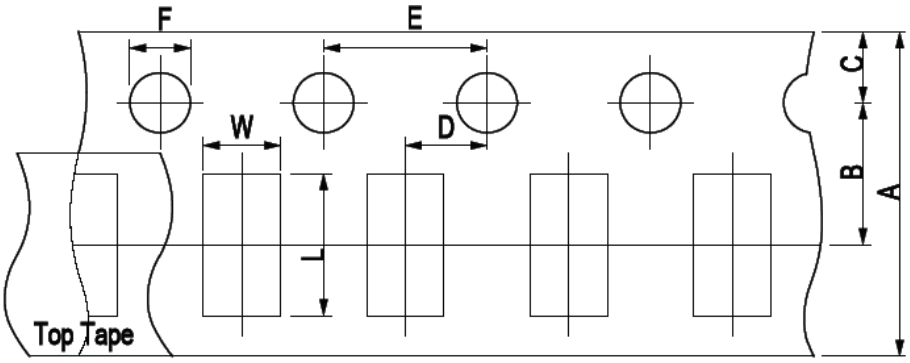

A	B	C	D	E	F	L	W
8.00±0.3	3.50± 0.05	1.75±0.1	2.00±0.05	4.00±0.1	1.50±0.1	2.30± 0.1	1.55± 0.1

编码规则 Part Number System

CS - 2450 - 16-C

- 16-C: External Dimensions L*W (mm) 1.6*0.8
- 2450: Central Frequency 2450MHz
- CS: Product Series: Chip Antenna

丝印 Marking

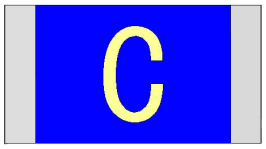

订货信息Order Information

设备 Device	包装 Package	净重 Net Weight	运送方式 Carrier	数量 Quantity	认证 HSF Status
CS-2450-16-C	1608	0.002g	Tape&Reel	5000pcs	RoHS compliant

版本信息 Revision history

日期/Date	版本号/Revision	版本描述/Description of changes
2022-12-2	V1.0	First Version

The contents of this data sheet are subject to change without notice.
Please confirm the specifications and delivery conditions when placing your order.

© Copyright 2015, Keweixin Electronics
All rights reserved