Portable Air Conditioner

Model: GCP15f

Operation Manual

Thanks for choosing this portable air conditioner device.

Please read the instructions carefully before first use of the device and enjoy it with a restful and pleasant journey.

This manual contains the safety information of proper use and maintenance of the model.

This model must connect with 100-120V~60Hz power supply.

The manufacturer and seller accept no liability for damage with faulty assembly or connection.

1.0 Safety instructions

⚠WARNING!

1、Do not near heat or flame. Keep the air conditioner away from direct sunlight, otherwise explosion and a leakage of combustible material may cause.
2、In case of accidental fire of the air conditioner, please use the following fire extinguishers in order: water, spray, sand, fire blanket, dry powder and carbon dioxide fire extinguisher.
3、The air conditioner uses environmentally friendly refrigerant R290, which is colorless, odorless, and combustible with flammability rating A3.
4、Do not place the air conditioner near any liquid and avoid placed in extreme wet environment. If closes to water, it must be especially careful when using.
5、If inner electronics components were damaged due to wet, please shut off the power supply and disconnect the power cord and place the air conditioner in secure and empty area. Please keep off until the ac units is to dry. Precautions of electric shock must be carried out when touching. After drying the accessory or component parts, please do not use again and discard directly, and it is better to contact the customer service to give instructions to handle properly.
6、Should clean the air conditioner by cloth if it is covered with dirt.
7、Do not use the air conditioner in the environment of strong static electricity or magnetic field (e.g. thunderstorm).
8、To avoid the damage of lighting, please turn off the air conditioner during thunderstorm while using outside.
9、Do not use the wire or other mental materials to touch the charger when the power connects, and otherwise it will cause the air conditioner to short-circuit.
10、Do not insert your fingers in the air outlet and inlet.
11、Do not disassemble the product or extend the power cord alone, and otherwise it will cause electric shock or fire.
12、Maintenance or repaired of the equipment, such as the components parts or the wire, must be carried out by manufacturer, dealer, certified technicians in case of danger.
13、Do not stand or sit on the air conditioner.
14、Do not put heavy objects on the air conditioner.
15、Do not cover the air inlet or exhaust air outlet during using.
16、Do not cover the air outlet and air inlet from front and rear in the process of working. It is forbidden to dry clothes by the air outlet.
17、Prevent the product from strike, fall down, and strong vibration so as to protect the compressor from damage. If the air conditioner slides above 10 minutes or suffers from a strong hit, please shut off the power supply and disconnect the power cord and put the product on a solid flat surface with 2 hours.
17、Please place the product in a dry and ventilated space, and make sure the air inlet and outlet must be kept >0.5m from wall.
18、Use only the accessories and component parts supplied by official brand, and use of non-standard parts may result in invalidation of warranty. If it needs to replace the accessories, please check and purchase the parts on the official website. The product must be repaired by professional technicians, and please do not disassemble, modify, repair and clean the inner parts.
19、Should place the product in the proper place that the pets cannot touch it. Children should use it under supervision.
20、Ensure the product is earthed. Earth wire can reduce the risk of electric shock while it occurs faults during charging. The model equipped with a power cord with grounded conductor and plug. In accordance with local law and regulations, the plug must connect in the grounded socket.
21、Improper connection of earth line may cause electric shock. If users do not make sure whether it is proper or not

with mounting the earth line, please ask the qualified technicians for help. Do not modify the product and add any plugs on it. If the plug is damaged, please contact the professional technicians or personnel.
22. The air conditioner must place in the flat area when working.
23. If the supply cord is damaged, it must be replaced by the manufacturer, its service agent or similarly qualified persons in order to avoid a hazard.
24. This appliance can be used by children aged from 8 years and above and persons with reduced physical, sensory or mental capabilities or lack of experience and knowledge if they have been given supervision or instruction concerning use of the appliance in a safe way and understand the hazards involved. Children shall not play with the appliance. Cleaning and user maintenance shall not be made by children without supervision.
25. The appliance shall be installed in accordance with national wiring regulations.
26. The air conditioner must be installed by professional or qualified persons.

IC Statement

This device complies with Industry Canada license-exempt RSS standard(s). Operation is subject to the following two conditions: (1) this device may not cause interference, and (2) this device must accept any interference, including interference that may cause undesired operation of the device.
Le présent appareil est conforme aux CNR d'Industrie Canada applicables aux appareils radio exempts de licence. L'exploitation est autorisée aux deux conditions suivantes :(1) l'appareil ne doit pas produire de brouillage, et (2) l'utilisateur de l'appareil doit accepter tout brouillage radioélectrique subi, même si le brouillage est susceptible d'en compromettre le fonctionnement.
The device is compliance with RF field strength limits, users can obtain Canadian information on RF exposure and compliance.
Le présent appareil est conforme de ce matériel aux conformités ou aux limites d'intensité de champ RF, les utilisateurs peuvent sur l'exposition aux radiofréquences et la conformité d'acquérir les informations correspondante.

This Class B digital apparatus complies with Canadian ICES-003.
Cet appareil numérique de la classe B est conforme à la norme NMB-003 du Canada.
CAN ICES-003 (B)/NMB-003(B)

This equipment should be installed and operated with a minimum distance of 20 cm between the radiator and your body.
Cet équipement doit être installé et utilisé à une distance minimale de 20 cm
entre le radiateur et votre corps.

2.0 Product instruction

1. Introduction of the main components

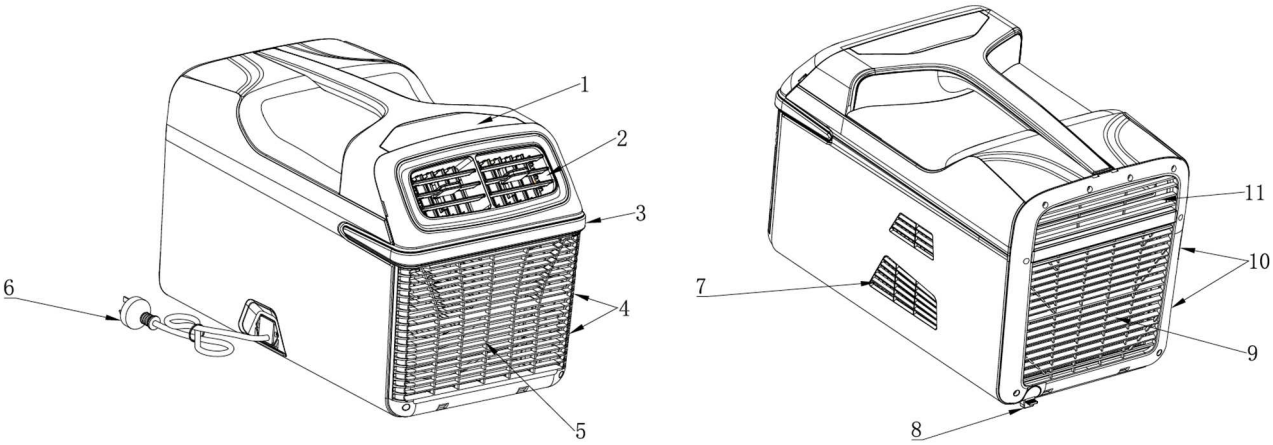

1.Control panel 2. Cooling air outlet 3. Ambient light 4. Detachable front air inlet filter 5. Front air inlet 7.Heat dissipation system 8. Drainage hole 9. Rear air inlet 10. Detachable rear air inlet filter 11. heat air outlet

2. Introduction of control panel

Power switch

Unlocked/ Ambient light button

Function mode

Fan speed control

Temp setting (up)

Temp setting (down)

Cooling symbol

TURBO Turbo mode (Fast cooling)

Sleep mode

Fan function mode

Digital/ troubleshooting display panel

°C Centigrade

°F Fahrenheit

Fan speed with four settings: 1, 2, 3 ,4.

3. How to use

(1) Connect the power with AC 100-120V~60Hz, and air conditioner is in standby state , power switch is on, and push only once to turn on the air conditioner. Push for 3 seconds that can turn off the air conditioner while the control panel is unlocked. The air conditioner will automatically turn into standby state when the power shuts off and connects again during working, so it needs to push again to turn on the air conditioner.

(2) The control panel will lock automatically within 2 minutes if users do not use it.. And the screen begins to dim, Unlocked mode shows in dim light. Push this button for 3 seconds can unlock the control panel. The ambient light can turn on or off while the control panel is unlocked. Push the button again can adjust the brightness of the light.

(3) M Function mode can switch cooling, turbo, sleep, fan function mode. While working in cooling mode, cooling symbol is on; While working in fast cooling, TURBO mode is on; During sleep mode, is on; During the Fan function mode, the compressor and cooling fans can not start., fan function mode is on.

(4) Push only once can adjust the fan speed of air outlet. The fan speed mode provides four settings for options. While setting in speed one, fan speed mode is on; While setting in speed two, fan speed mode is on; While setting in speed three, and fan speed mode is on; While setting in speed four, and fan speed mode is on.

(5) Push can turn up the temp, and push can turn the temp down; The temp range is from 16 to 30°C.

(6) The air conditioner can memorize the function pattern and setting temp in the last time. So the air conditioner will work automatically in the same function mode and temp as the last time when it starts.

(7) When it occurs "ED" on the screen, it means it is filled with condensate. Please turn off the air conditioner and shut off the power, and open drainage hole to drain off water. The compressor and cooling fan stop working when the product filled with water.

4. Installation instruction

⚠Note: Please turn off the air conditioner and disconnect the power cord while installing air pipe and drainpipe!

(1) Install the air pipe

Customer can install the air pipe in the front air outlet or rear air outlet by personal need.

Install the front air pipe:

Step one: Attach the front air cover to the front panel by inserting the buckle.

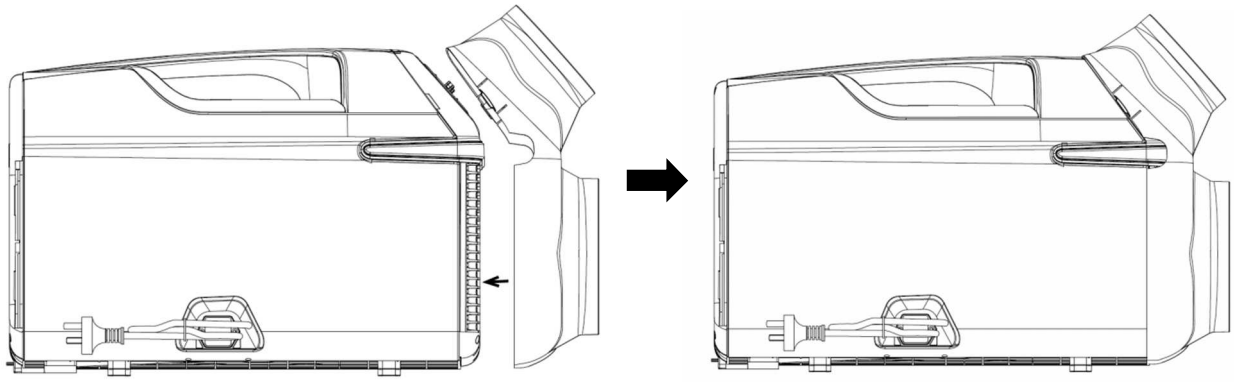

Step two: Use 122mm air pipe buckle to insert it into the air cover buckle, and rotate clockwise on the connector. The air pipe can be extended by personal need and maximum length is 1.5m.

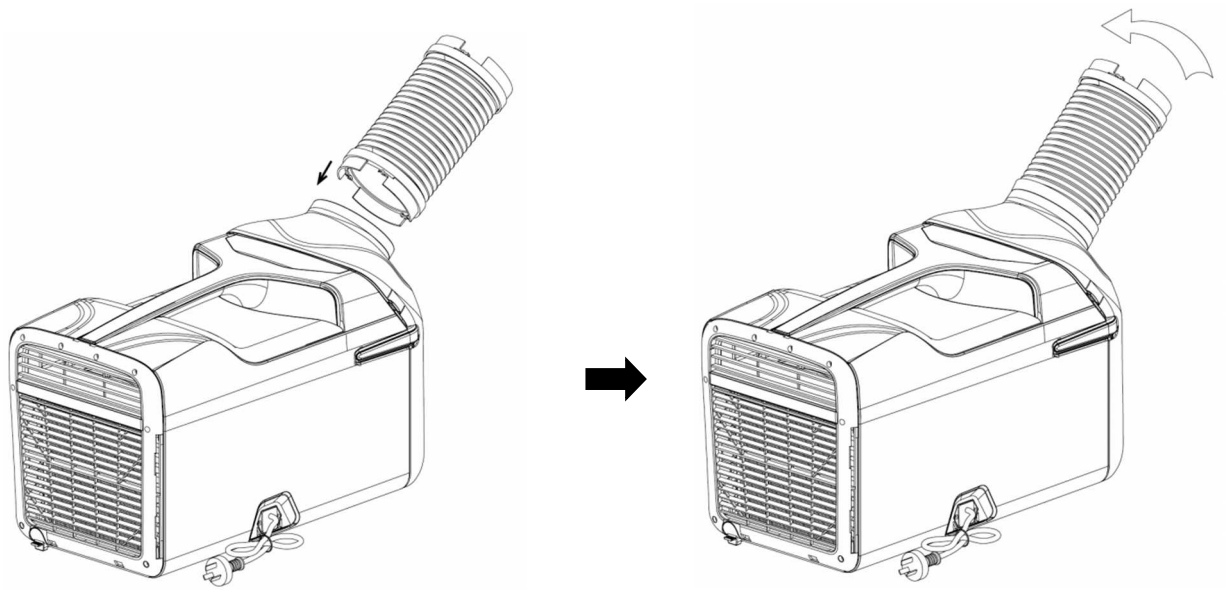

(2) Install the rear air pipe:

Step one: Attach the rear air cover to the rear panel by inserting the buckle.

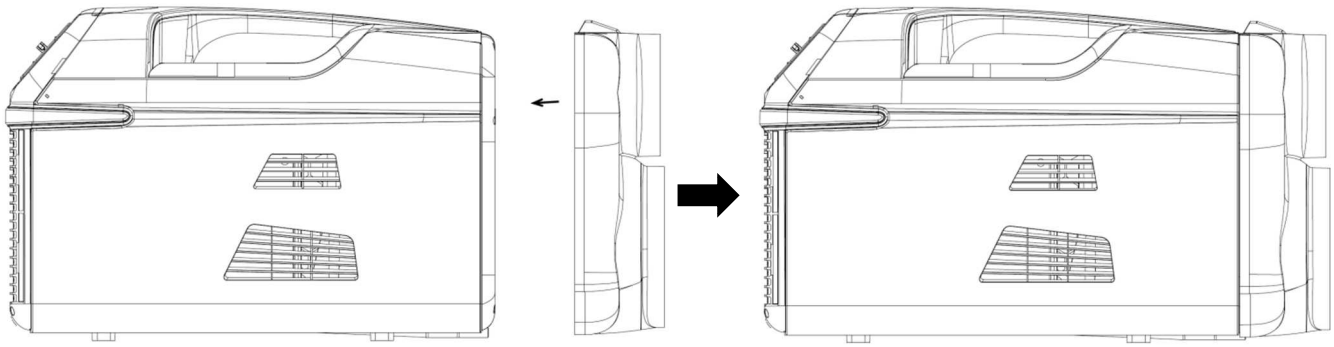

Step two: Use 122mm and 162mm air pipe to insert into the air cover buckle on the upper and lower side relatively. The air pipe can be extended by personal need and maximum length is 1.5m.

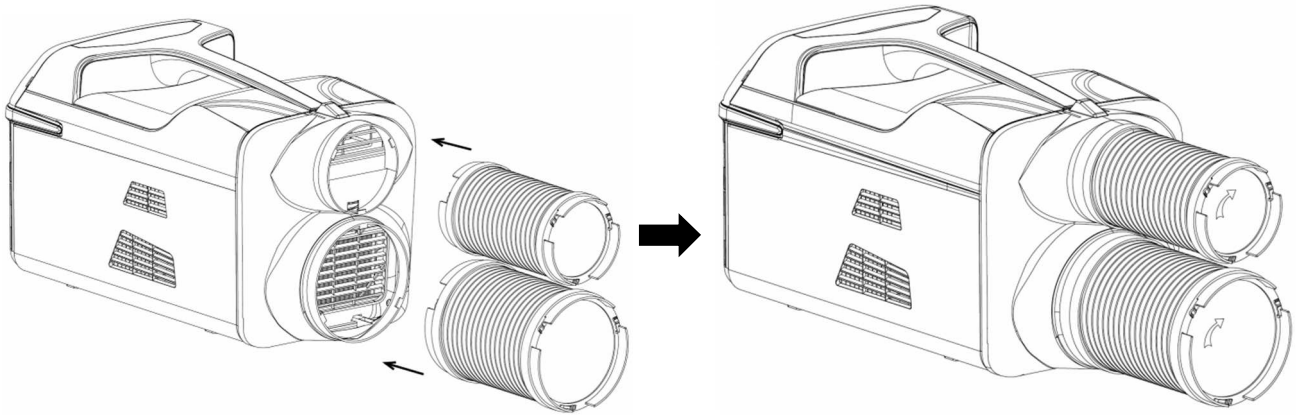

(3) Install the drainpipe:

Open the drainage hole, and pull and press the water pipe into the hole to avoid exposure to water when leaks out water.

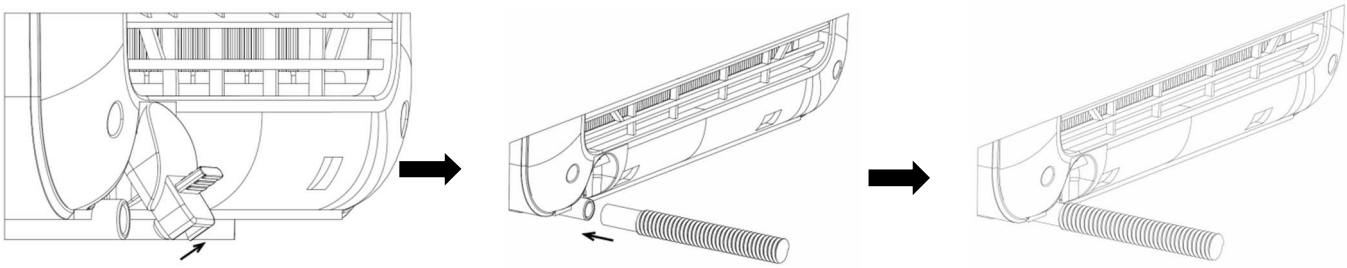

.

⚠**Warning**: Changes or modifications to this unit not expressly approved by the party responsible for compliance could void the user's authority to operate the equipment.

NOTE: This equipment has been tested and found to comply with the limits for a Class B digital device, pursuant to Part 15 of the FCC Rules. These limits are designed to provide reasonable protection against harmful interference in a residential installation. This equipment generates, uses and can radiate radio frequency energy and, if not installed and used in accordance with the instructions, may cause harmful interference to radio communications.

However, there is no guarantee that interference will not occur in a particular installation. If this equipment does cause harmful interference to radio or television reception, which can be determined by turning the equipment off and on, the user is encouraged to try to correct the interference by one or more of the following measures:

- Reorient or relocate the receiving antenna.
- Increase the separation between the equipment and receiver.
- Connect the equipment into an outlet on a circuit different from that to which the receiver is connected.
- Consult the dealer or an experienced radio/TV technician for help

  This equipment should be installed and operated with a minimum distance of 20 cm between the radiator and your body.

The device must not be co-located or operating in conjunction with any other antenna or transmitter.

3.0. Model specification

Model No.	GCP15f
Input Voltage	100V-120V~50/60Hz
Rated Voltage	500W
Rated Current	5.0A
Cooling Capacity	1100W
Refrigerant	R290/120g
Temp Setting	16 ~ 30C°
Working Temp	16 ~ 43C°
Air volume	195m³/H
Net Weight	14.6kg

Product size	L516xW307xH355mm

4.0. Circuit diagram

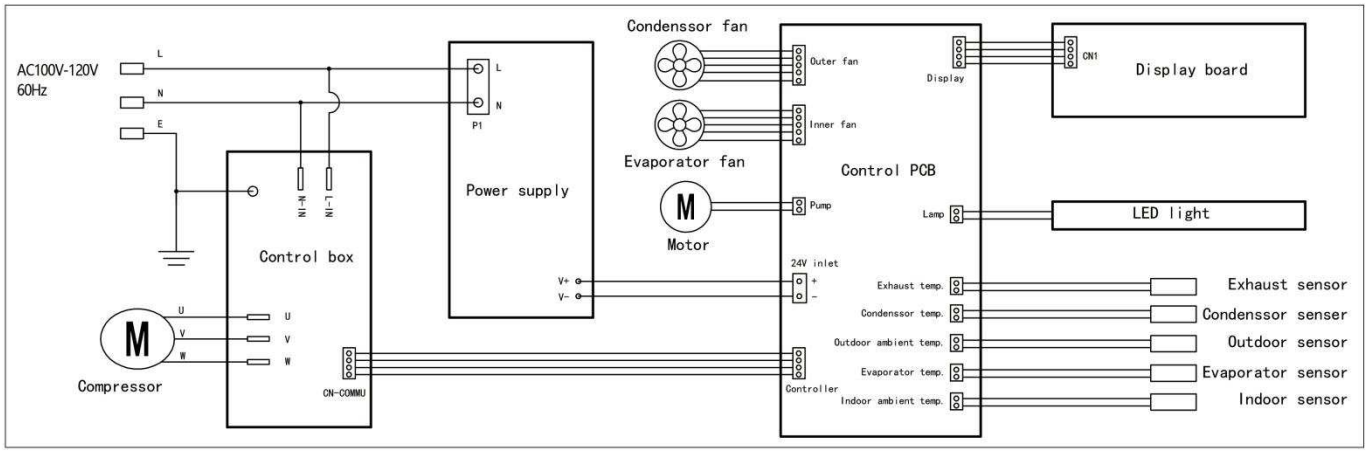

5.0. Trouble shooting.

Trouble	Reason	Solution
No display	1、The power is not supplied. 2、The switch board is damaged. 3、The control board is damaged. 4、The display panel is damaged.	1.Ensure the power connects perfectly and switch on the display panel. 2. Ask professional technicians for maintenance.
Not cooling	1. Heat dissipation is not good enough. 2. Air pipe is blocked and bends a lot. 3. Ambient temp is too high and the using room is too big to afford. 4. Leakage of refrigerant; system failure	1. Ensure the better heat dissipation of the product and it is best not to bend the air pipe. 2. Ask professional technicians for maintenance.
Not working with compressor	The control panel failure	Ask professional technicians for maintenance.
	The controller of compressor failure	Ask professional technicians for maintenance.
	Ambient temp is lower than	Set the suitable temp again.

	setting temp.	
	The control panel failure	Ask professional technicians for maintenance.
Abnormal noise	1. The air conditioner tilts above 7 degrees. 2. It hits the wall or unknown items 3. The inner parts loose and falls down.	1. Tilt it back and put the air conditioner in the flat place. 2. Contact the professional technicians to check the inner parts.
Troubleshooting E1	Indoor temperature sensor failure	Indoor temperature sensor or the control panel is damaged.
Troubleshooting E2	Evaporator temperature sensor failure	Evaporator temperature sensor or the control panel is damaged.
Troubleshooting E3	The input voltage with AC is low or high.	Check the input voltage (100-120V) or the controller of compressor is damaged.
Troubleshooting E4	The evaporator fan failure	The evaporator fan or the control panel is damaged.
Troubleshooting E5	The condenser fan failure	The condenser fan or the control panel is damaged.
Troubleshooting E6	The compressor controller failure （PFC failure；the temp of IPM is too high；DC link voltage is abnormal.)	Replace the compressor controller.
Troubleshooting E7	The compressor failure （overcurrent、compressor rotor locked、running lack of phase、start failure）	The compressor controller or compressor is damaged.
Troubleshooting E8	The exhaust temp of compressor is too high.	It is protected when the exhaust temp behind 95C°. 2、The exhaust temp sensor or the control panel is damaged.
Troubleshooting E9	No refrigerant	Temperature sensor of evaporator's detector falls down. Add refrigerant
Troubleshooting EA	Exhaust temperature sensor failure	Exhaust temperature sensor or the control panel is damaged.
Troubleshooting EB	The exhaust temp of compressor is too high.	It is protected when the exhaust temp behind 95C°. 2、The exhaust temp sensor or the control panel is damaged.
Troubleshooting EC	Condenser senor failure.	Condenser sensor or the controller is damaged.
Troubleshooting ED	Excessive condensate for	Drain off water in time.

	warning	
Troubleshooting EE	Communication failure between the controller and mainboard	1、To check whether it connects perfectly with the wire 2、Ask professional technicians for maintenance.
Troubleshooting EF	Communication failure between display panel and mainboard	To check whether it connects perfectly with the wire Ask professional technicians for maintenance.

6.0. Packing list

1. Portable air conditioner
2. Front air cover
3. Rear air cover
4. 122mm air pipe
5. 162mm air pipe
6. 1.2m drainpipe

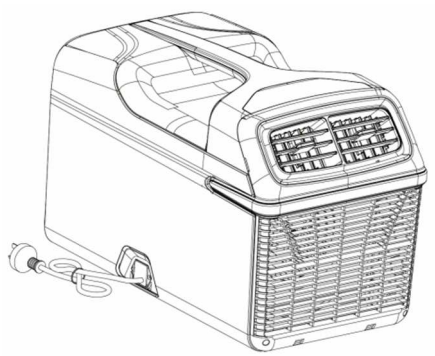

The portable air conditioner

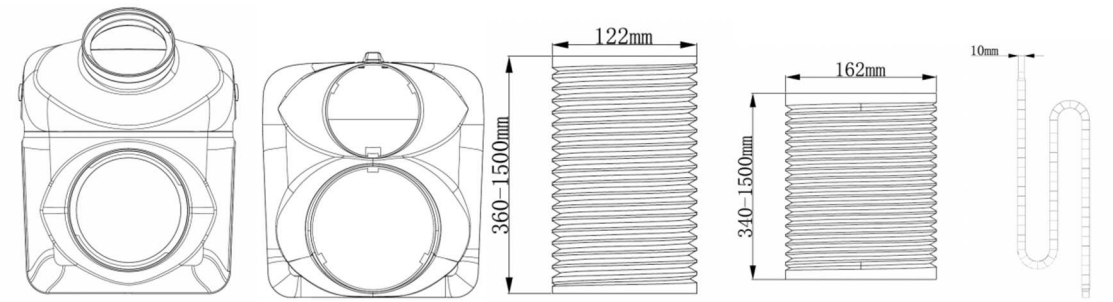

Front air cover Rear air cover 122mm air pipe 162mm air pipe 1.2m drainpipe

7.0. Clean and maintenance

Protect the air conditioner in accordance with the following tips:

Note: Please disconnect the power cord before cleaning the air conditioner!

- Do not use the caustic cleaning agents or hard objects to clean it, and otherwise the air conditioner will be damaged.
- Do not use the high-pressure cleaner to clean it, because the air conditioner is easy to be damaged when exposures to water.
- Turn off the air conditioner and place it to drain off water operated by hand so as to prevent long-term storage from breeding the ground for bacteria and leak out water when moving.
- Dismantle the air filter and make use of the hairdryer to blow the dirt and clean the surface by slightly damp cloth.
- Clean the surface of the air conditioner and the display panel by cleaning cloth regularly.
- Should make sure it will not damage the system when remove the leaves or the dirt from ventilation grilles.
- Check all the component parts are tightening regularly.
- Check the safety of connected cord regularly.
- It is recommended to place the air conditioner around 0~30°C, and keep it away from water, fire, and other mental materials.

	Correct Disposal of this product
	This marking indicates that this product should not be disposed with other household wastes throughout the USA. To prevent possible harm to the environment or human health from uncontrolled waste disposal, recycle it responsibly to promote the sustainable reuse of material resources. To return your used device, please use the return and collection systems or contact the retailer where the product was purchased. They can take this product for environmental safe recycling.