USER INSTRUCTION

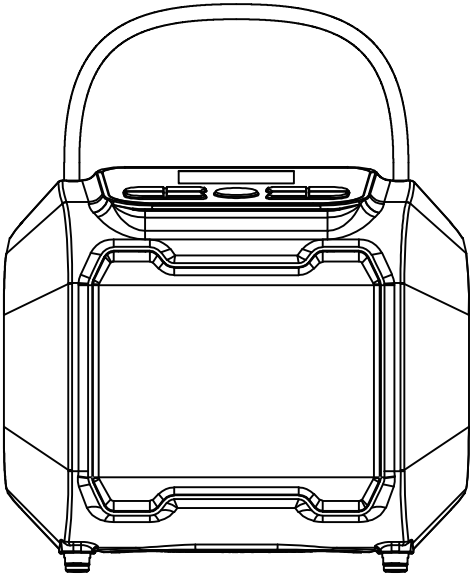

PT 04

MADE IN CHINA

PANEL PARAMETERS

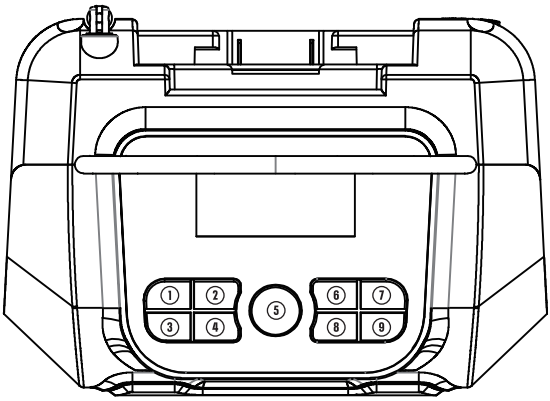

① SOS ② TUNE - ⑥ TUNE + ⑦ PRESET

⑤ OK SOAN

③ ⏻ ④ VOL - ⑧ VOL + ⑨ MODE

SPECIFICATION	
MODEL	PT 04
BLUETOOTH	BLUETOOTH 5.0V
RATED VOLTAGE	10W
USB	USB-C

1. AM Radio Mode

1.1 Long press for 2 seconds to turn on the power, short press MODE key to switch modes, select AM to enter AM mode

1.2 Full Scan

Long press the Scan button in the AM playback interface to enter the full frequency auto station sweep mode, and the number of searching stations will be displayed in the upper right corner

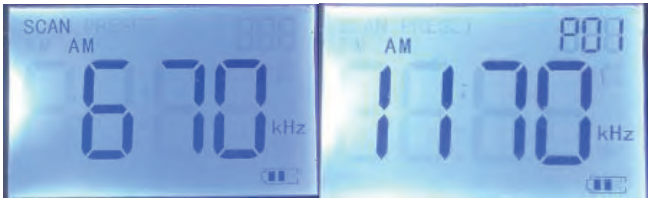

1.3 Tune+/Tune-: Manual Desk Search

Short press Tune+/Tune(PREV/NEXT) key to select ten frequencies before and after jumping, long press Tune+/Tune(PREV/NEXT) key to jump to the next radio station and enter the manual station search state.

1.4 Preset

Short press Preset to call up full-range stations P01-P60, press Tune+/Tune(PREV/NEXT) to select the station you want to listen to, press OK to enter and listen to the station.

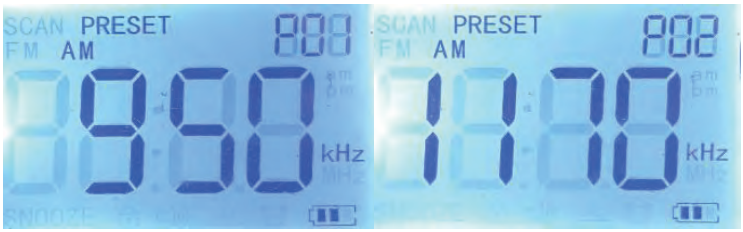

2.FM Radio Mode

2.1Short press MODE key to switch modes, select FM to enter FM mode.

2.2 Full Scan

Press and hold the Scan button in the FM playback interface to enter the full-frequency auto-scan mode, and the number of search stations will be displayed in the upper right corner.

2.3 Tune+/Tune-：Manual Desk Search

Short press Tune+/Tune(PREV/NEXT) key to select ten frequencies before and after jumping, long press Tune+/Tune(PREV/NEXT) key to jump to the next radio station, and enter into the manual search state.

2.4 Preset

Short press Preset to call out full frequency radio stations P01-P60, press Tune+/Tune-(PREV/NEXT) to select the station you want to listen to, press OK to enter and listen to the station.

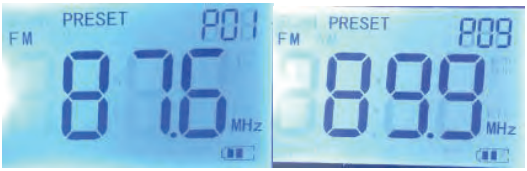

3.Bluetooth Radio Mode

3.1Short press MODE key to switch modes, select BT to enter Bluetooth mode.

3.2When Bluetooth is flashing on the screen, open the Bluetooth of your cell phone, search for Radio-DCB204, select Radio-DCB204, and then you can hear " beep", which means you are successful to connect it

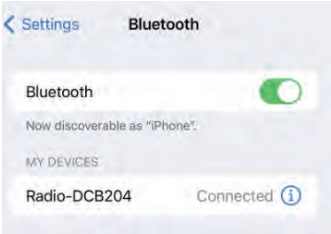

3.3 Play/pause： Press Play/Pause to control the play/pause of music on the device

3.4Tune+/Tune-(PREV/NEXT)： Press PREV/NEXT to toggle previous/next track

3.5 VOL-/VOL+: Press VOL-/VOL+ to control the music volume level on the device

4.AUX Mode

AuxIn mode allows you to connect an external audio source to the AuxIn 3.5mm port for audio playback.

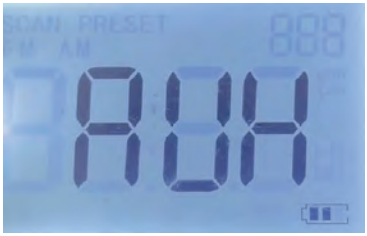

4.1 Entering AUX mode

Press MODE to switch to AUX mode, press SELECT to enter the mode, connect the external audio source to the AuxIn 3.5mm port to play audio

5.SOS Mode

Long press the SOS button to trigger the SOS alarm, short press to cancel the alarm.

6. Set Time

Set Time: Short press the on/off button ⏻ Enter standby, this time will appear time interface, long press the Mode key to jump to the time setting program, PREV/NEXT key can be adjusted time, and then press the OK key for confirmation

THE TANDEM FUNCTION OPERATES AS FOLLOWS

TAKE MACHINE 1 AS THE MAIN EXAMPLE:

1. Turn on two machines: machine 1 and machine 2

2. Both machines are switched to Bluetooth mode
(At this time the cell phone can see the two same bluetooth name)

3. Machine 1 long press MODE button. At this time machine 2 will show connection.

4. Use your cell phone to connect to the bluetooth, at this time the bluetooth broadcast song, the sound will be played out from the two platforms together

FCC Statement

This equipment has been tested and found to comply with the limits for a Class B digital device, pursuant to Part 15 of the FCC Rules. These limits are designed to provide reasonable protection against harmful interference in a residential installation. This equipment generates uses and can radiate radio frequency energy and, if not installed and used in accordance with the instructions, may cause harmful interference to radio communications. However, there is no guarantee that interference will not occur in a particular installation. If this equipment does cause harmful interference to radio or television reception, which can be determined by turning the equipment off and on, the user is encouraged to try to correct the interference by one or more of the following measures:

-- Reorient or relocate the receiving antenna.

-- Increase the separation between the equipment and receiver.

-- Connect the equipment into an outlet on a circuit different from that to which the receiver is connected.

-- Consult the dealer or an experienced radio/TV technician for help.

This device complies with part 15 of the FCC Rules. Operation is subject to the following two conditions: (1) This device may not cause harmful interference, and (2) this device must accept any interference received, including interference that may cause undesired operation.

Changes or modifications not expressly approved by the party responsible for compliance could void the user's authority to operate the equipment.

The device has been evaluated to meet general RF exposure requirement. The device can be used in portable exposure condition without restriction.