SMD CERAMIC ANTENNA
Data Sheet

CS-2450-31

For 2400-2484MHz

3.2x1.6mm [EIA1206]

特征 Feature

- 重量轻，结构紧凑
  Light weight, compact
- 宽带大，低成本
  Wide bandwidth, low cost
- 高增益内置天线
  Built-in antenna with high gain

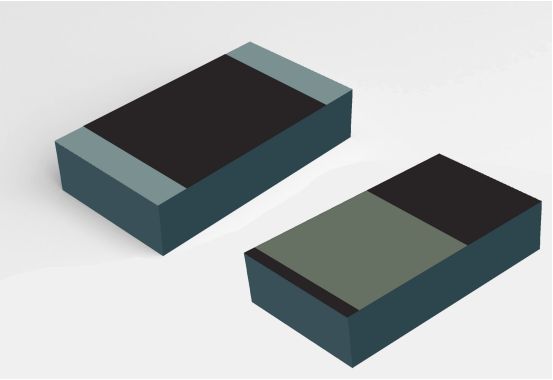

应用 Application

- 蓝牙技术Bluetooth
  2.4GHz频段 IEEE802.11g/b
- 齐格比系统
  Zigbee systems
- 其它etc...

形状和尺寸(单位: mm)
Shapes And Dimensions Dimensions in mm

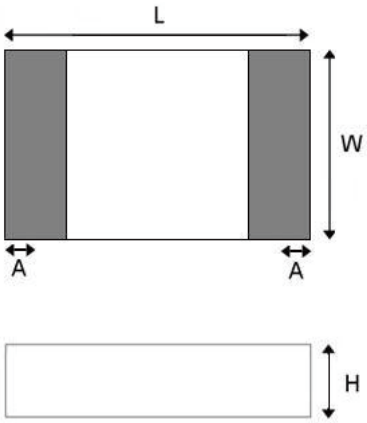

L	W	A	H
3.10±0.10	1.55±0.10	0.40±0.20	0.55±0.1

电气特性 Electrical Characteristics per line(TA=25℃)

参数Parameter	规格Specification	单位Units
频带 Frequency Band	2400~2483	MHz
极化 Polarization	线极化	
*最大增益 Peak Gain	2.58	dBi
*效率 Efficiency	72.30	%
阻抗 Impendance	50	Ω

■ 编码 Part Numbering System

CS	-	2450	-	31	-	A
Material		Frequency		Size		Type

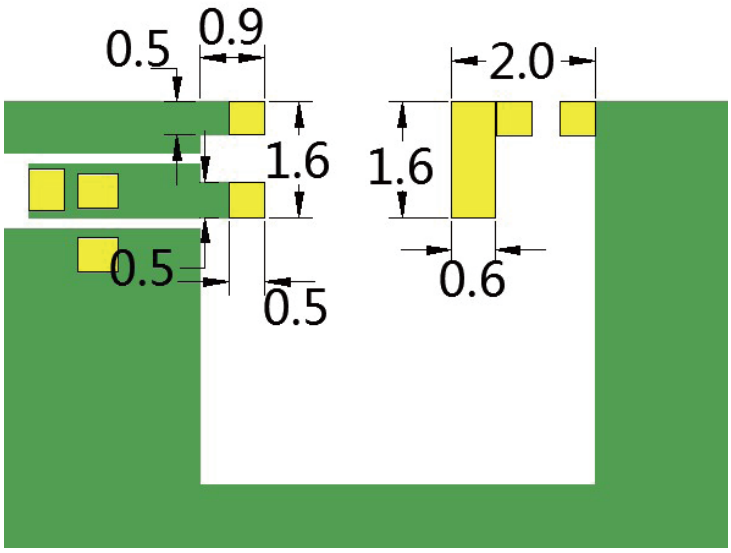

评价板 Evaluation Board

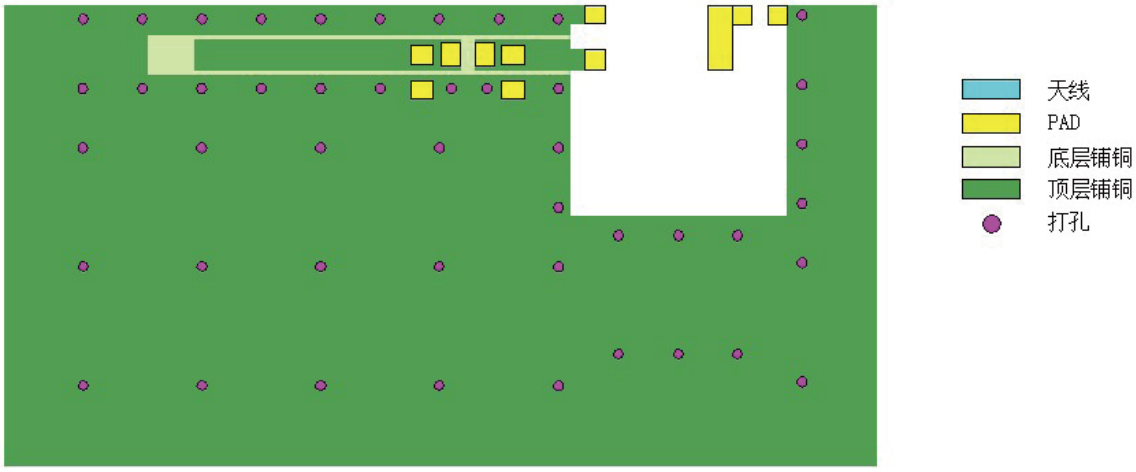

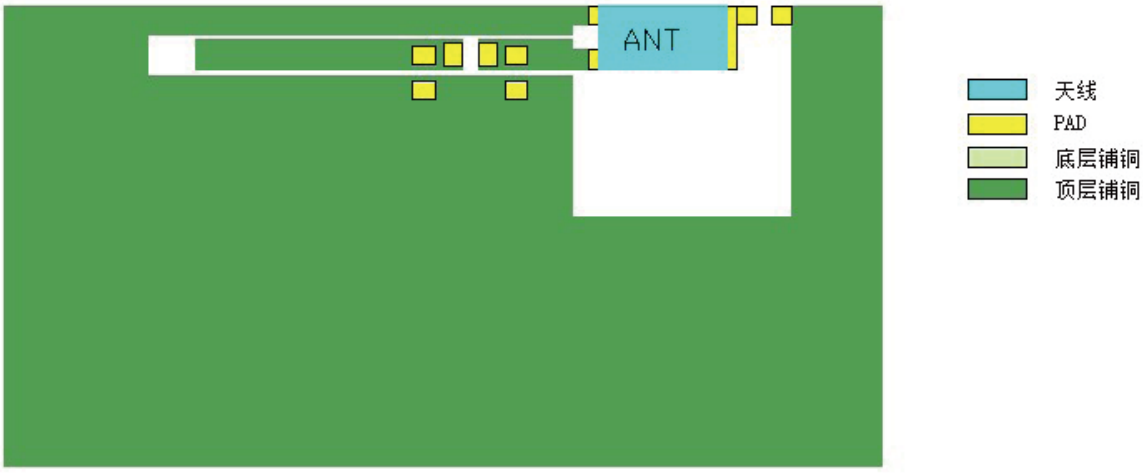

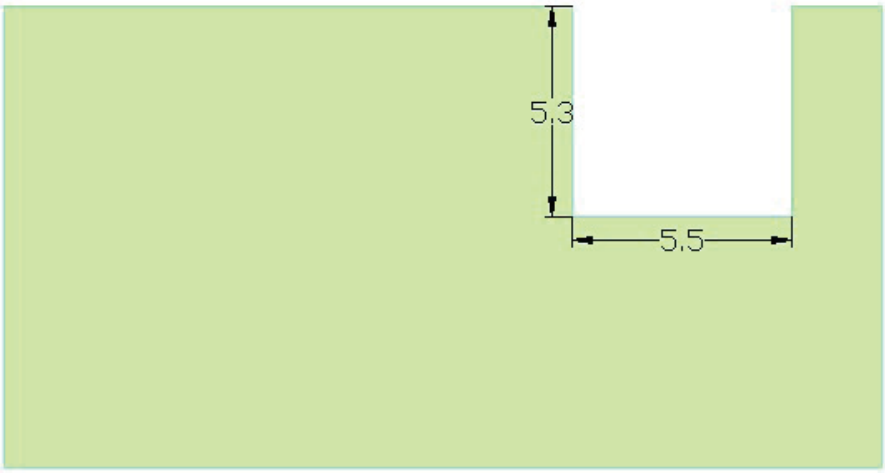

推荐回流剖面
RECOMMENDED REFLOW PROFILE

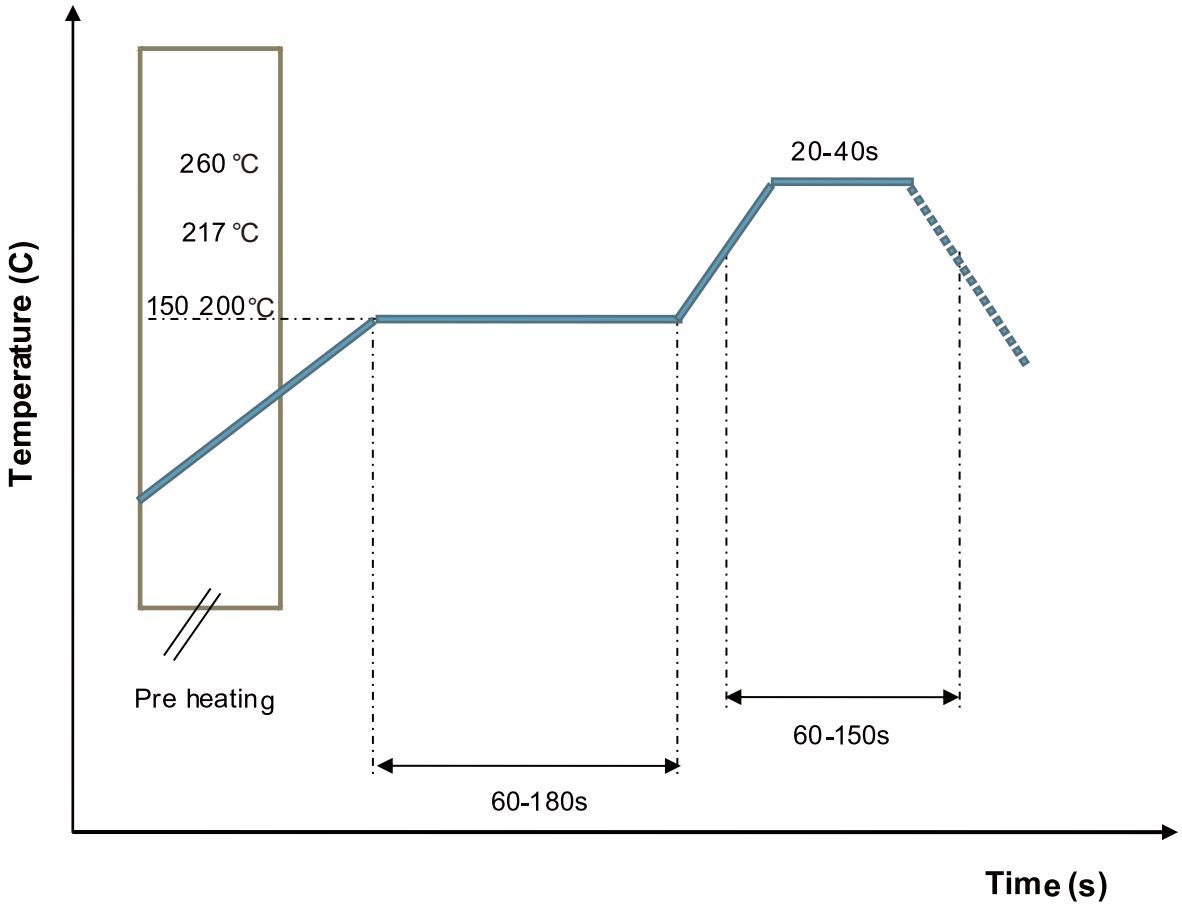

3D Pattern

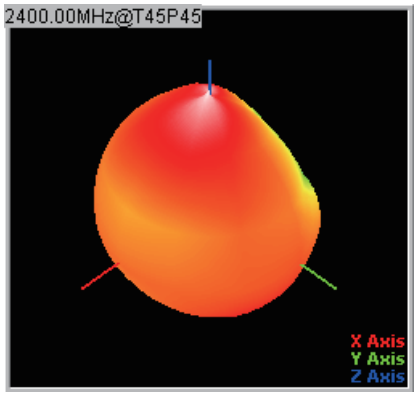

2400 MHz

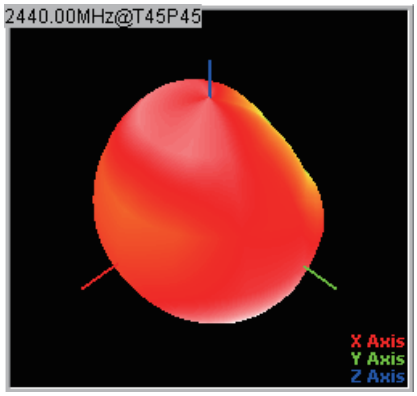

2450 MHz

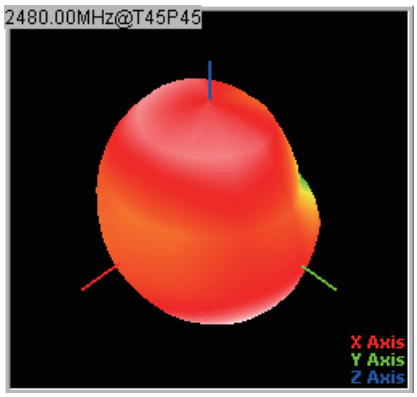

2500 MHz

■ 包装形式 Packaging Style

□ REEL DIMENSIONS

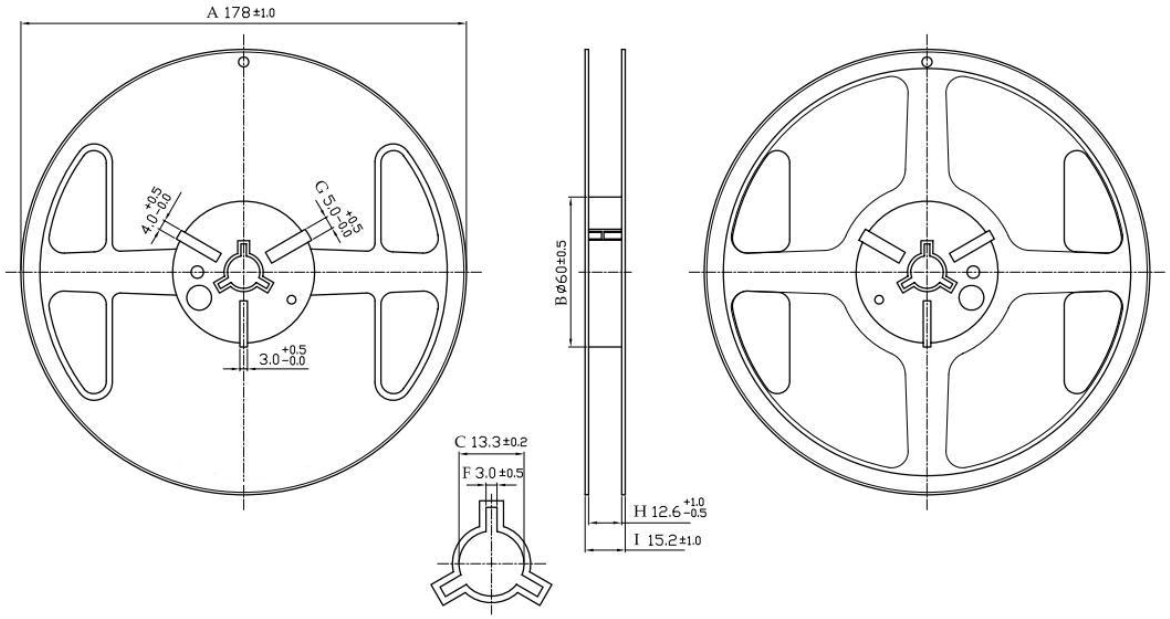

□ 胶带尺寸 TAPE DIMEN SIONS

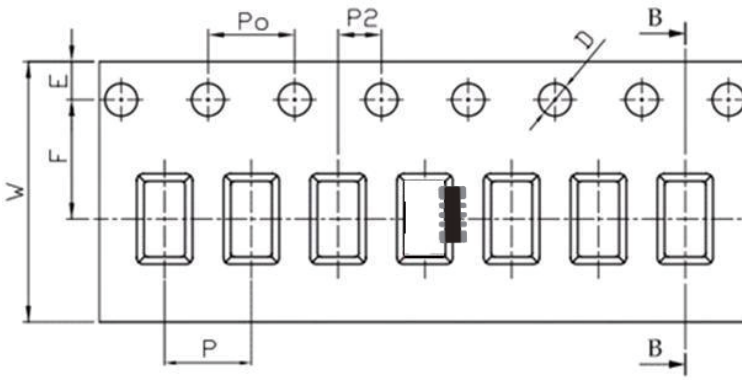

Feature	Specifications	Tolerances
W	8 .00	±0.30
P	4.00	±0.10
E	1.75	±0.10
F	3.50	±0.10
P2	2.00	±0.10
D	1.50	+0.10 -0.00
Po	4.00	±0.10
10Po	40.00	±0.20

数量Quantity:5000pieces per 7 reel