# TEST REPORT

**Product Name : Stunt RC car**
**Model Number : See Page 5 for details**
**FCC ID : 2BCR7-JD155-2A**

Prepared for : JIN DE TOYS FACTORY
Address : Lianxia Town, Chenghai District, SHANTOU China

Prepared by : EMTEK (SHENZHEN) CO., LTD.
Address : Building 69, Majialong Industry Zone, Nanshan District, Shenzhen, Guangdong, China

Tel: (0755) 26954280
Fax: (0755) 26954282

Report Number : ENS2307070107W01301R
Date(s) of Tests : July 7, 2023 to September 12, 2023
Date of issue : September 12, 2023

# Table of Contents

**1 TEST RESULT CERTIFICATION ..... 3**

**2 EUT TECHNICAL DESCRIPTION ..... 6**

**3 SUMMARY OF TEST RESULT ..... 7**

**4 TEST METHODOLOGY ..... 8**

4.1 GENERAL DESCRIPTION OF APPLIED STANDARDS ..... 8
4.2 MEASUREMENT EQUIPMENT USED ..... 8
4.3 DESCRIPTION OF TEST MODES ..... 10

**5 FACILITIES AND ACCREDITATIONS ..... 11**

5.1 FACILITIES ..... 11
5.2 LABORATORY ACCREDITATIONS AND LISTINGS ..... 11

**6 TEST SYSTEM UNCERTAINTY ..... 12**

**7 SETUP OF EQUIPMENT UNDER TEST ..... 13**

7.1 RADIO FREQUENCY TEST SETUP 1 ..... 13
7.2 RADIO FREQUENCY TEST SETUP 2 ..... 13
7.3 CONDUCTED EMISSION TEST SETUP ..... 15
7.4 SUPPORT EQUIPMENT ..... 15

**8 TEST REQUIREMENTS ..... 16**

8.1 BANDWIDTH TEST ..... 16
8.2 RADIATED SPURIOUS EMISSION ..... 19
8.3 CONDUCTED EMISSIONS TEST ..... 31
8.4 ANTENNA APPLICATION ..... 32

# 1 TEST RESULT CERTIFICATION

| | | |
|---|---|---|
| Applicant | : | JIN DE TOYS FACTORY |
| Address | : | Lianxia Town, Chenghai District, SHANTOU China |
| Manufacturer | : | JIN DE TOYS FACTORY |
| Address | : | Lianxia Town, Chenghai District, SHANTOU China |
| EUT | : | Stunt RC car |
| Model Name | : | See Page 5 for details |
| Trademark | : | N/A |

Measurement Procedure Used:

| APPLICABLE STANDARDS | |
|---|---|
| **STANDARD** | **TEST RESULT** |
| FCC 47 CFR Part 2, Subpart J<br>FCC 47 CFR Part 15, Subpart C | **PASS** |
| IC RSS-GEN, Issue 5, February 2021<br>IC RSS-210, Issue 10, April 2020 | **PASS** |

The above equipment was tested by EMTEK (SHENZHEN) CO., LTD. The test data, data evaluation, test procedures, and equipment configurations shown in this report were made in accordance with the procedures given in ANSI C63.10 (2013) and the energy emitted by the sample EUT tested as described in this report is in compliance with the requirements of FCC Rules Part 2, Part 15.249, IC RSS-210 Issue 10 and IC RSS-GEN, Issue 5.

The test results of this report relate only to the tested sample identified in this report

Date of Test : July 7, 2023 to September 12, 2023

Prepared by : Luo Pei Ye
Luo peiye /Editor

Reviewer : Joe Xia
Joe Xia /Supervisor

Approve & Authorized Signer : Lisa Wang/Manager

EMTEK (SHENZHEN) CO., LTD. TESTING

# Modified Information

| Version | Report No. | Revision Date | Summary |
|---|---|---|---|
| Ver.1.0 | ENS2307070107W01301R | / | Original Report |
| | | | |
| | | | |
| | | | |

## Declaration on model

| Model no. |
| --- |
| JD155-1A,JD155-2A,JD155-3A,JD155-4A,JD155-5A,JD155-6A,JD155-7A,JD155-8A,JD155-9A, JD155-10A,JD155-11A,JD155-12A,JD155-13A,JD155-14A,JD155-15A,JD155-16A,JD155-17A, JD155-18A,JD155-19A,JD155-20A,JD155-21A,JD155-22A,JD155-23A,JD155-24A,JD155-25A, JD155-26A,JD155-27A,JD155-28A,JD155-29A,JD155-30A,JD155-31A,JD155-32A,JD155-33A, JD155-34A,JD155-35A,JD155-36A,JD155-37A,JD155-38A,JD155-39A,JD155-40A,JD155-41A, JD155-42A,JD155-43A,JD155-44A,JD155-45A,JD155-46A,JD155-47A,JD155-48A,JD155-49A, JD155-50A,JD133-55A,JD133-56A,JD133-57A,JD133-58A,JD133-59A,JD133-60A, |

## 2 EUT TECHNICAL DESCRIPTION

| | |
|---|---|
| **Product:** | Stunt RC car |
| **Model Number:** | See Page 5 for details<br>(Note: All models are identical in circuitry and electrical, mechanical and physical construction; the difference are the appearance and model number for trading purpose, we prepared JD155-1A for test.) |
| **Sample:** | 2# |
| **Modulation:** | GFSK |
| **Frequency Range:** | 2405 MHz to 2475 MHz |
| **Number of Channels:** | 9 channels |
| **Max Transmit Power:** | 92.76 dBuV/m@3m |
| **Antenna:** | Internal Antenna |
| **Antenna Gain:** | 0 dBi |
| **Power supply:** | DC 3V |
| **Temperature Range:** | Refer to manufacturer user manusal/operating manual |

*Note: for more details, please refer to the User's manual of the EUT.*

## 3 SUMMARY OF TEST RESULT

| FCC Part Clause | IC Part Clause | Test Parameter | Verdict | Remark |
|---|---|---|---|---|
| 15.207 | RSS-GEN Clause 8.8 | Conducted Emission | N/A | |
| 15.209 | RSS-GEN Clause 8.9 | Radiated Emission | PASS | |
| 15.249 | RSS-210 Annex B.10 | Radiated Spurious Emission | PASS | |
| 15.249 | RSS-210 Annex B.10 | Band edge test | PASS | |
| 15.249 | RSS-GEN Clause 6.7 | 20dB Bandwidth | PASS | |
| 15.203 | RSS-GEN Clause 6.8 | Antenna Requirement | PASS | |
| NOTE1: N/A (Not Applicable)<br>NOTE2: The report use radiated measurements in the restricted frequency bands. In addition, the radiated test is also performed to ensure the emissions emanating from the device cabinet also comply with the applicable limits. | | | | |

RELATED SUBMITTAL(S) / GRANT(S):

This submittal(s) (test report) is intended for **FCC ID: 2BCR7-JD155-2A** filing to comply with Section 15.249 of the FCC Part 15, Subpart C Rules.

# 4 TEST METHODOLOGY

## 4.1 GENERAL DESCRIPTION OF APPLIED STANDARDS

According to its specifications, the EUT must comply with the requirements of the following standards:
FCC 47 CFR Part 2, Subpart J
FCC 47 CFR Part 15, Subpart C
IC RSS-GEN, Issue 5
IC RSS-210, Issue 10

## 4.2 MEASUREMENT EQUIPMENT USED

### 4.2.1 Conducted Emission Test Equipment

| Equipment | Manufacturer | Model No. | Serial No. | Last Cal. | Cal. Interval |
|---|---|---|---|---|---|
| EMI Test Receiver | Rohde & Schwarz | ESCI | 101384 | 2023/5/13 | 1Year |
| AMN | Rohde & Schwarz | ENV216 | 101161 | 2023/5/13 | 1Year |
| AMN | Kyoritsu | KNW-407 | 8-1492-9 | 2023/5/11 | 1Year |

### 4.2.2 Radiated Emission Test Equipment

| Equipment | Manufacturer | Model No. | Serial No. | Last Cal. | Cal. Interval |
|---|---|---|---|---|---|
| Pre-Amplifier | Bonn | BLMA 011001N | 2213967A | 2022/10/31 | 1Year |
| EMI Test Receiver | Rohde & Schwarz | ESR7 | 102551 | 2022/10/31 | 1Year |
| Bilog Antenna | Schwarzbeck | VULB9163 | 9163142 | 2022/7/24 | 2 Year |
| Horn antenna | Schwarzbeck | BBHA9120D | 9120D-1198 | 2023/6/2 | 2 Year |
| Pre-Amplifier | Bonn | BLMA 0118-5G | 2213967B-01 | 2022/10/31 | 1Year |
| Spectrum Analyzer | Rohde & Schwarz | FSV3044 | 101290 | 2022/10/31 | 1Year |
| Horn antenna | Schwarzbeck | BBHA9170 | 9170-399 | 2023/5/12 | 2 Year |
| Pre-Amplifier | Lunar EM | LNA18G26-40 | J1012131010001 | 2023/5/10 | 2 Year |
| Pre-Amplifier | Lunar EM | LNA26G40-40 | J1013131028001 | 2023/5/10 | 1 Year |
| Loop Antenna | Schwarzbeck | FMZB1519 | 1519-012 | 2023/5/12 | 1 Year |
| Band reject Filter(50dB) | WI/DE | WRCGV-2400(2400-2485MHz) | 2 | 2023/5/10 | 1 Year |

### 4.2.3 Radio Frequency Test Equipment

| Equipment | Manufacturer | Model No. | Serial No. | Last Cal. | Cal. Interval |
|---|---|---|---|---|---|
| Signal Analyzer | Agilent | N9010A | MY53470879 | 2023/5/10 | 1Year |
| Vector Signal Generater | Agilent | N5182B | MY53050878 | 2023/5/10 | 1Year |
| Analog Signal Generator | Agilent | N5171B | MY53050553 | 2023/5/10 | 1Year |
| Power Meter | Agilent | PS-X10-100 | \ | 2023/5/13 | 1Year |
| Switchgroup | THEDA | ETF-025(VASC6) | TW5451008 | N/A | N/A |

| | | | | | |
|---|---|---|---|---|---|
| MIMO Matrix Switch | THEDA | 4P5TM18 | TW5451009 | N/A | N/A |
| Temperature&Humidity Chamber | ESPEC | EL-02KA | 12107166 | 2023/5/10 | 1Year |

### 4.3 DESCRIPTION OF TEST MODES

The EUT has been tested under its typical operating condition.
The EUT configuration for testing is installed on RF field strength measurement to meet the Commissions requirement and operating in a manner which intends to maximize its emission characteristics in a continuous normal application.
The Transmitter was operated in the normal operating mode. The TX frequency was fixed which was for the purpose of the measurements.

Those data rates (GFSK) were used for all test.

Pre-defined engineering program for regulatory testing used to control the EUT for staying in continuous transmitting and receiving mode is programmed.

Frequency and Channel list:

| Channel | Frequency (MHz) | Channel | Frequency (MHz) | Channel | Frequency (MHz) |
|---|---|---|---|---|---|
| 1 | 2405 | 2 | 2408 | 3 | 2414 |
| 4 | 2428 | 5 | 2434 | 6 | 2440 |
| 7 | 2458 | 8 | 2467 | 9 | 2475 |

Test Frequency and Channel list:

| Lowest Frequency | | Middle Frequency | | Highest Frequency | |
|---|---|---|---|---|---|
| Channel | Frequency (MHz) | Channel | Frequency (MHz) | Channel | Frequency (MHz) |
| 1 | 2405 | 6 | 2440 | 9 | 2475 |

# 5 FACILITIES AND ACCREDITATIONS

## 5.1 FACILITIES

All measurement facilities used to collect the measurement data are located at

Building 69, Majialong Industry Zone District, Nanshan District, Shenzhen, China
The sites are constructed in conformance with the requirements of ANSI C63.7, ANSI C63.10 and CISPR Publication 22.

## 5.2 LABORATORY ACCREDITATIONS AND LISTINGS

| Site Description | | |
|---|---|---|
| EMC Lab. | : | **Accredited by CNAS**<br>The Certificate Registration Number is L2291.<br>The Laboratory has been assessed and proved to be in compliance with CNAS-CL01 (identical to ISO/IEC 17025:2017)<br><br>**Accredited by FCC**<br>Designation Number: CN1204<br>Test Firm Registration Number: 882943<br><br>**Accredited by A2LA**<br>The Certificate Number is 4321.01.<br><br>**Accredited by Industry Canada**<br>The Conformity Assessment Body Identifier is CN0008 |
| Name of Firm | : | EMTEK (SHENZHEN) CO., LTD. |
| Site Location | : | Building 69, Majialong Industry Zone,<br>Nanshan District, Shenzhen, Guangdong, China |

# 6 TEST SYSTEM UNCERTAINTY

The following measurement uncertainty levels have been estimated for tests performed on the apparatus:

| Parameter | Uncertainty |
|---|---|
| Radio Frequency | ±1x10^-5 |
| Maximum Peak Output Power Test | ±1.0dB |
| Conducted Emissions Test | ±2.0dB |
| Radiated Emission Test | ±2.0dB |
| Occupied Bandwidth Test | ±1.0dB |
| Band Edge Test | ±3dB |
| All emission, radiated | ±3dB |
| Antenna Port Emission | ±3dB |
| Temperature | ±0.5℃ |
| Humidity | ±3% |

Measurement Uncertainty for a level of Confidence of 95%

# 7 SETUP OF EQUIPMENT UNDER TEST

## 7.1 RADIO FREQUENCY TEST SETUP 1

The EUT wireless component's antenna ports(s) of the EUT are connected to the measurement instrument per an appropriate attenuator. The EUT is controlled by PC/software to emit the specified signals for the purpose of measurements.

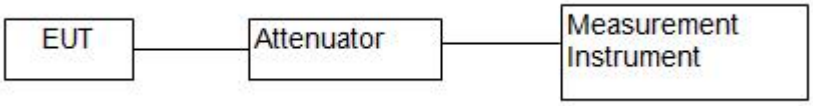


## 7.2 RADIO FREQUENCY TEST SETUP 2

The test site semi-anechoic chamber has met the requirement of NSA tolerance 4 dB according to the standards: ANSI C63.10. The test distance is 3m.The setup is according to the requirements in Section 13.1.4.1 of ANSI C63.10-2013 and CAN/CSA-CEI/IEC CISPR 22.

Below 30MHz：

The EUT is placed on a turntable 0.8 meters above the ground in the chamber, 3 meter away from the antenna (loop antenna). The Antenna should be positioned with its plane vertical at the specified distance from the EUT and rotated about its vertical axis for maximum response at each azimuth about the EUT. The center of the loop shall be 1 m above the ground. For certain applications, the loop antenna plane may also need to be positioned horizontally at the specified distance from the EUT.

30MHz-1GHz：

The EUT is placed on a turntable 0.8 meters above the ground in the chamber, 3 meter away from the antenna. The maximal emission value is acquired by adjusting the antenna height, polarisation and turntable azimuth. Normally, the height range of antenna is 1 m to 4 m, the azimuth range of turntable is 0° to 360°, and the receive antenna has two polarizations Vertical (V) and Horizontal (H).

Above 1GHz：

The EUT is placed on a turntable 1.5 meters above the ground in the chamber, 3 meter away from the antenna. The maximal emission value is acquired by adjusting the antenna height, polarisation and turntable azimuth. Normally, the height range of antenna is 1 m to 4 m, the azimuth range of turntable is 0° to 360°, and the receive antenna has two polarizations Vertical (V) and Horizontal (H).

(a) Radiated Emission Test Set-Up, Frequency Below 30MHz

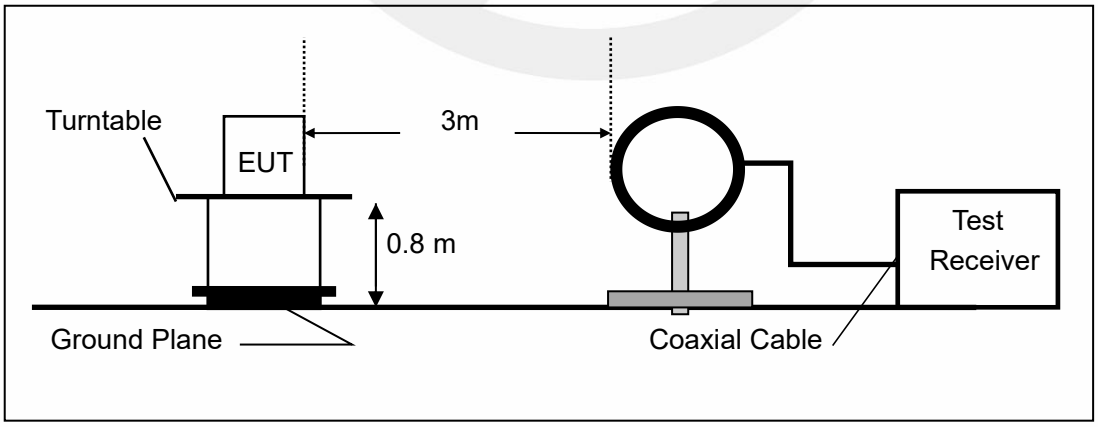

(b) Radiated Emission Test Set-Up, Frequency Below 1000MHz

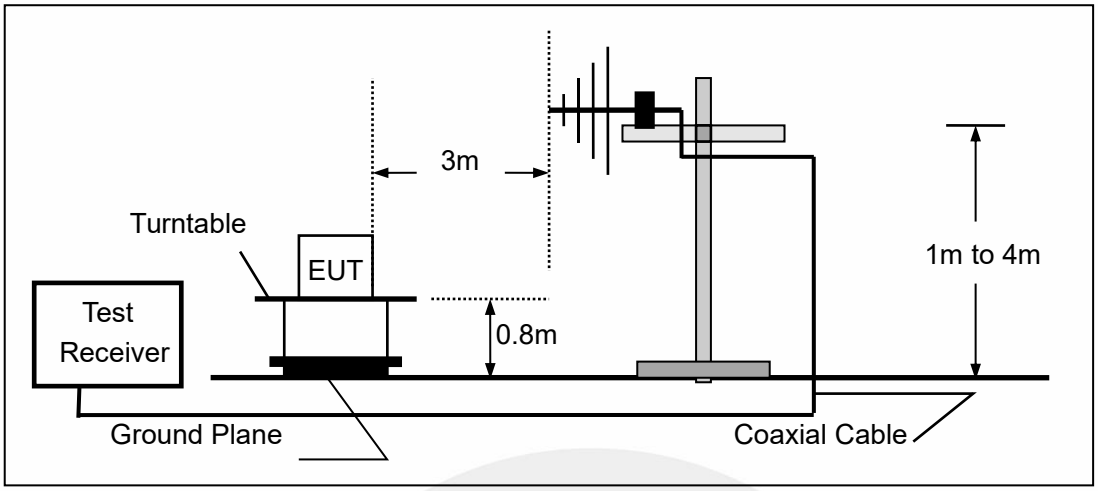


(c) Radiated Emission Test Set-Up, Frequency above 1000MHz

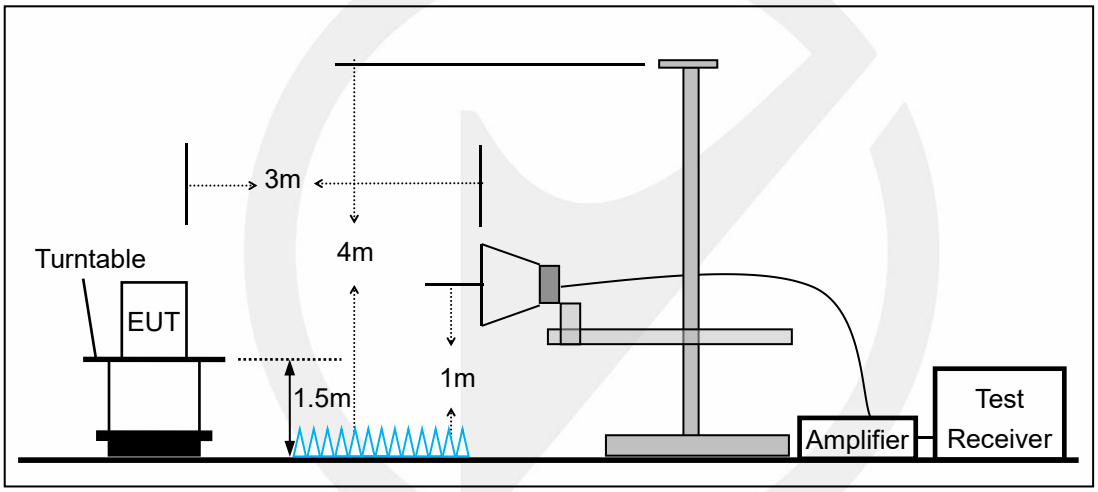

### 7.3 CONDUCTED EMISSION TEST SETUP

The mains cable of the EUT (maybe per AC/DC Adapter) must be connected to LISN. The LISN shall be placed 0.8 m from the boundary of EUT and bonded to a ground reference plane for LISN mounted on top of the ground reference plane. This distance is between the closest points of the LISN and the EUT. All other units of the EUT and associated equipment shall be at least 0.8m from the LISN.
Ground connections, where required for safety purposes, shall be connected to the reference ground point of the LISN and, where not otherwise provided or specified by the manufacturer, shall be of same length as the mains cable and run parallel to the mains connection at a separation distance of not more than 0.1 m.
According to the requirements in Section 13.1.4.1 of ANSI C63.10-2013 Conducted emissions from the EUT measured in the frequency range between 0.15 MHz and 30 MHz using CISPR Quasi-Peak and average detector mode.

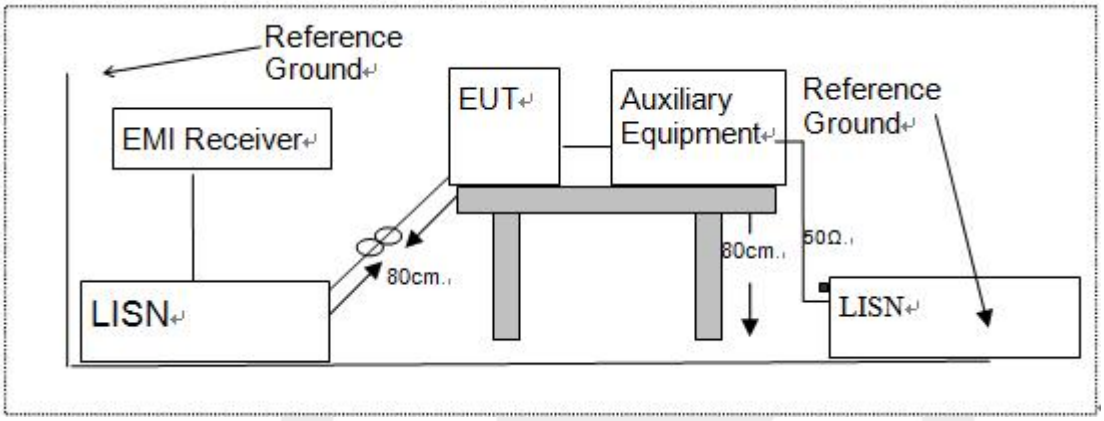


### 7.4 SUPPORT EQUIPMENT

| EUT Cable List and Details | | | |
|---|---|---|---|
| Cable Description | Length (m) | Shielded/Unshielded | With / Without Ferrite |
| / | / | / | / |

| Auxiliary Cable List and Details | | | |
|---|---|---|---|
| Cable Description | Length (m) | Shielded/Unshielded | With / Without Ferrite |
| / | / | / | / |

| Auxiliary Equipment List and Details | | | |
|---|---|---|---|
| Description | Manufacturer | Model | Serial Number |
| / | / | / | / |

***Notes:***

1. *All the equipment/cables were placed in the worst-case configuration to maximize the emission during the test.*
2. *Grounding was established in accordance with the manufacturer's requirements and conditions for the intended use.*

# 8 TEST REQUIREMENTS

## 8.1 BANDWIDTH TEST

### 8.1.1 Applicable Standard

According to FCC Part 15.249
According to RSS-GEN Clause 6.7

### 8.1.2 Conformance Limit

N/A

### 8.1.3 Test Configuration

Test according to clause 7.1 radio frequency test setup 1

### 8.1.4 Test Procedure

The EUT was operating in controlled its channel. Printed out the test result from the spectrum by hard copy function.
The RF output of EUT was connected to the spectrum analyzer by RF cable and attenuator. The path loss was compensated to the results for each measurement.
Set to the maximum power setting and enable the EUT transmit continuously
Set RBW ≥ 1% of the 20 dB bandwidth
Set the video bandwidth (VBW) ≥ RBW
Set Span= approximately 2 to 3 times the 20 dB bandwidth
Set Detector = Peak.
Set Trace mode = max hold.
Set Sweep = auto couple.
Measure the maximum width of the emission that is constrained by the frequencies associated with the two outermost amplitude points (upper and lower frequencies) that are attenuated by 20 dB relative to the maximum level measured in the fundamental emission.
Use measurement function measure 99% Bandwidth.
Measure and record the results in the test report.

**Test Results**

| | |
|---|---|
| Temperature: | 22° C |
| Relative Humidity: | 53% |
| ATM Pressure: | 1011 mbar |

| Operation Mode | Channel Frequency (MHz) | 20db Measurement Bandwidth (MHz) | 99% Measurement Bandwidth (MHz) | Limit (kHz) | Verdict |
|---|---|---|---|---|---|
| GFSK | 2405 | 1.179 | 1.0505 | N/A | PASS |
| | 2440 | 1.132 | 1.0236 | N/A | PASS |
| | 2475 | 1.136 | 1.0228 | N/A | PASS |
| Note: N/A (Not Applicable) | | | | | |

| | |
|---|---|
| Test Model | 20dB &99% Occupied Bandwidth<br>GFSK<br>Channel : 2405MHz |

| | |
|---|---|
| Test Model | 20dB &99% Occupied Bandwidth<br>GFSK<br>Channel : 2440MHz |

| | |
|---|---|
| Test Model | 20dB &99% Occupied Bandwidth<br>GFSK<br>Channel : 2475MHz |

## 8.2 RADIATED SPURIOUS EMISSION

### 8.2.1 Applicable Standard

According to FCC Part 15.249 and 15.209
According to RSS-210 Annex B.10 and RSS-GEN Clause 8.9

### 8.2.2 Conformance Limit

According to FCC Part 15.249: radiated emissions which fall in the restricted bands, as defined in §15.205(a), must also comply with the radiated emission limits specified in §15.209(a) (see §15.205(c)).
According to FCC Part15.205, Restricted bands

| MHz | MHz | MHz | GHz |
|---|---|---|---|
| 0.090-0.110 | 16.42-16.423 | 399.9-410 | 4.5-5.15 |
| 10.495-0.505 | 16.69475-16.69525 | 608-614 | 5.35-5.46 |
| 2.1735-2.1905 | 16.80425-16.80475 | 960-1240 | 7.25-7.75 |
| 4.125-4.128 | 25.5-25.67 | 1300-1427 | 8.025-8.5 |
| 4.17725-4.17775 | 37.5-38.25 | 1435-1626.5 | 9.0-9.2 |
| 4.20725-4.20775 | 73-74.6 | 1645.5-1646.5 | 9.3-9.5 |
| 6.215-6.218 | 74.8-75.2 | 1660-1710 | 10.6-12.7 |
| 6.26775-6.26825 | 123-138 | 2200-2300 | 14.47-14.5 |
| 8.291-8.294 | 149.9-150.05 | 2310-2390 | 15.35-16.2 |
| 8.362-8.366 | 156.52475-156.52525 | 2483.5-2500 | 17.7-21.4 |
| 8.37625-8.38675 | 156.7-156.9 | 2690-2900 | 22.01-23.12 |
| 8.41425-8.41475 | 162.0125-167.17 | 3260-3267 | 23.6-24.0 |
| 12.29-12.293 | 167.72-173.2 | 3332-3339 | 31.2-31.8 |
| 12.51975-12.52025 | 240-285 | 3345.8-3358 | 36.43-36.5 |
| 12.57675-12.57725 | 322-335.4 | 3600-4400 | (2) |
| 13.36-13.41 | | | |

According to FCC Part15.205, the level of any transmitter spurious emission in Restricted bands shall not exceed the level of the emission specified in the following table

| Restricted Frequency(MHz) | Field Strength (μV/m) | Field Strength (dBμV/m) | Measurement Distance |
|---|---|---|---|
| 0.009-0.490 | 2400/F(KHz) | 20 log (uV/m) | 300 |
| 0.490-1.705 | 24000/F(KHz) | 20 log (uV/m) | 30 |
| 1.705-30 | 30 | 29.5 | 30 |
| 30-88 | 100 | 40 | 3 |
| 88-216 | 150 | 43.5 | 3 |
| 216-960 | 200 | 46 | 3 |
| Above 960 | 500 | 54 | 3 |

Remark :1. Emission level in dBuV/m=20 log (uV/m)
2. Measurement was performed at an antenna to the closed point of EUT distance of meters.
3. Distance extrapolation factor =40log(Specific distance/ test distance)( dB);
Limit line=Specific limits(dBuV) + distance extrapolation factor.
for the frequency ranges below 30 MHz, a narrower RBW is used for these ranges but the measured value should add a RBW correction factor (RBWCF) where RBWCF [dB] =10*lg(100 [kHz]/narrower RBW [kHz]). , the narrower RBW is 1 kHz and RBWCF is 20 dB for the frequency 9 kHz to 150 kHz, and the narrower RBW is 10 kHz and RBWCF is 10 dB for the frequency 150 kHz to 30 MHz.

Field strength of fundamental and Field strength of harmonics Limit:

| Fundamental frequency | Field strength of fundamental (millivolts/meter) | Field strength of harmonics (microvolts/meter) |
|---|---|---|
| 902-928 MHz | 50(94 dBuV/m) | 500(54 dBuV/m) |
| 2400-2483.5 MHz | 50(94 dBuV/m) | 500(54 dBuV/m) |
| 5725-5875 MHz | 50(94 dBuV/m) | 500(54 dBuV/m) |
| 24.0-24.25 GHz | 250(108 dBuV/m) | 2500(68 dBuV/m) |

As shown in §15.35(b), for frequencies above 1000 MHz, the field strength limits in paragraphs (a) and (b) of this section are based on average limits. However, the peak field strength of any emission shall not exceed the maximum permitted average limits specified above by more than 20 dB under any condition of modulation

For this report

| Fundamental Frequency | Field Strength Of Fundamental | Field Strength of Spurious Emissions |
|---|---|---|
| 2400-2483.5 MHz | AV:94 dBuV/m at 3m distance | AV:54 dBuV/m at 3m distance |
| | PK:114 dBuV/m at 3m distance | PK:74 dBuV/m at 3m distance |

### 8.2.3 Test Configuration

Test according to clause 7.2 radio frequency test setup 2

### 8.2.4 Test Procedure

This test is required for any spurious emission that falls in a Restricted Band, as defined in Section 15.205. It must be performed with the highest gain of each type of antenna proposed for use with the EUT. Use the following spectrum analyzer settings:
The EUT was placed on a turn table which is 0.8m above ground plane.
Maximum procedure was performed on the highest emissions to ensure EUT compliance.
Span = wide enough to fully capture the emission being measured
RBW = 1 MHz for f ≥ 1 GHz(1GHz to 25GHz), 100 kHz for f < 1 GHz(30MHz to 1GHz)
VBW ≥ RBW
Sweep = auto
Detector function = peak
Trace = max hold
Follow the guidelines in ANSI C63.10-2013 with respect to maximizing the emission by rotating the EUT, measuring the emission while the EUT is situated in three orthogonal planes (if appropriate), adjusting the measurement antenna height and polarization, etc. A pre-amp and a high pass filter are required for this test, in order to provide the measuring system with sufficient sensitivity. Allow the trace to stabilize. The peak reading of the emission, after being corrected by the antenna factor, cable loss, pre-amp gain, etc., is the peak field strength, which must comply with the limit specified in Section 15.35(b). Submit this data.
Now set the VBW to 10 Hz, while maintaining all of the other instrument settings. This peak level, once corrected, must comply with the limit specified in Section 15.209. If the dwell time per channel of the hopping signal is less than 100 ms, then the reading obtained with the 10 Hz VBW may be further adjusted by a “duty cycle correction factor”, derived from 20log(dwell time/100 ms), in an effort to demonstrate compliance with the 15.209 limit. Submit this data.
Repeat above procedures until all frequency measured was complete.

### 8.2.5 Test Results

| | |
|---|---|
| Temperature: | 24° C |
| Relative Humidity: | 53% |
| ATM Pressure: | 1011 mbar |

■ Spurious Emission below 30MHz (9KHz to 30MHz)

| Freq. (MHz) | Ant.Pol. H/V | Emission Level(dBuV/m) | | Limit 3m(dBuV/m) | | Over(dB) | |
|---|---|---|---|---|---|---|---|
| | | PK | AV | PK | AV | PK | AV |
| -- | -- | -- | -- | -- | -- | -- | -- |

Note: the amplitude of spurious emission that is attenuated by more than 20dB below the permissible limit has no need to be reported.
Distance extrapolation factor =40log(Specific distance/ test distance)( dB);
Limit line=Specific limits(dBuV) + distance extrapolation factor

■ Field Strength of the fundamental signal
All the antenna(Antenna 1) and modes(GFSK) mode have been tested, and the worst(Antenna 1,GFSK) resultrecorded was report as below:

| Freq. (MHz) | Ant.Pol. H/V | Emission Level(dBuV/m) | | Limit 3m(dBuV/m) | | Over(dB) | |
|---|---|---|---|---|---|---|---|
| | | PK | AV | PK | AV | PK | AV |
| 2405 | V | 92.76 | 90.46 | 114 | 94 | -21.24 | -3.54 |
| 2405 | H | 92.01 | 92.01 | 114 | 94 | -21.99 | -1.99 |
| | | | | | | | |
| 2440 | V | 90.86 | 89.01 | 114 | 94 | -23.14 | -4.99 |
| 2440 | H | 89.64 | 88.20 | 114 | 94 | -24.36 | -5.8 |
| | | | | | | | |
| 2475 | V | 88.23 | 88.23 | 114 | 94 | -25.77 | -5.77 |
| 2475 | H | 89.27 | 88.99 | 114 | 94 | -24.73 | -5.01 |

Note: (1) Correct Factor= Antenna Factor +Cable Loss- Amplifier Gain
(2) Emission Level= Reading Level+Probe Factor +Cable Loss

■ Out of Band Emissions
All the antenna(Antenna 1) and modes(GFSK) mode have been tested, and the worst(Antenna 1,GFSK) resultrecorded was report as below:

Test mode: GFSK Frequency: Channel : 2405MHz

| Frequency (MHz) | Polarity | PK(dBuV/m) (VBW=3MHz) | Limit 3m (dBuV/m) | Over(dB) | AV(dBuV/m) (VBW=10Hz) | Limit 3m (dBuV/m) | Over(dB) |
|---|---|---|---|---|---|---|---|
| 2389.27 | V | 45.48 | 74 | -28.52 | 28.52 | 54 | -15.68 |
| 2387.70 | H | 44.13 | 74 | -29.87 | 37.36 | 54 | -16.64 |

Test mode: GFSK Frequency: Channel : 2475MHz

| Frequency (MHz) | Polarity | PK(dBuV/m) (VBW=3MHz) | Limit 3m (dBuV/m) | Over(dB) | AV(dBuV/m) (VBW=10Hz) | Limit 3m (dBuV/m) | Over(dB) |
|---|---|---|---|---|---|---|---|
| 2483.84 | V | 47.08 | 74 | -26.92 | 37.75 | 54 | -16.25 |
| 2484.94 | H | 47.37 | 74 | -38.23 | 38.23 | 54 | -15.77 |

**Note:** (1) All Readings are Peak Value (VBW=3MHz) and Peak Value (VBW=10Hz).
(2) Emission Level= Reading Level+Correct Factor +Cable Loss.
(3) Correct Factor= Ant_F + Cab_L - Preamp
(4)Data of measurement within this frequency range shown " -- " in the table above means the reading of emissions are attenuated more than 20dB below the permissible limits or the field strength is too small to be measured.

| Test Model | Band Emissions<br>Low<br>Test By: XZC | GFSK | V |
|---|---|---|---|

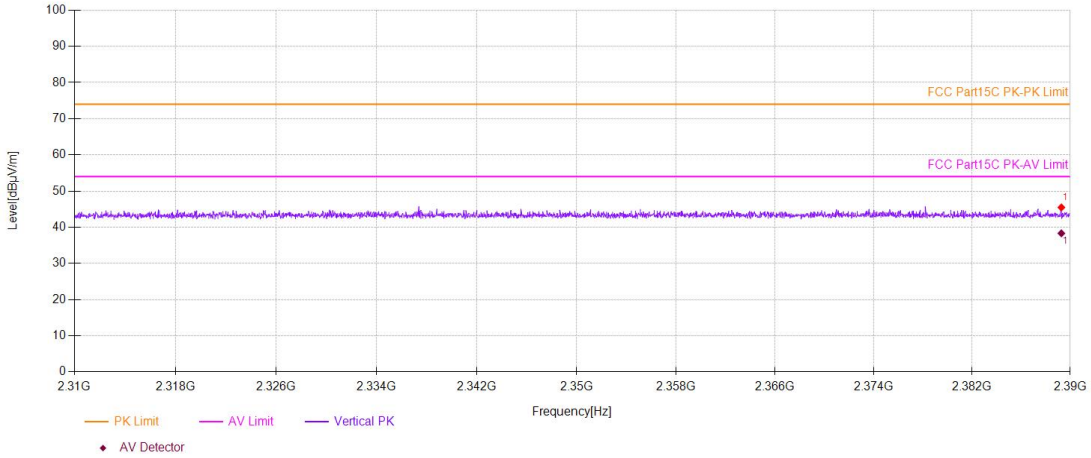


| Test Model | Band Emissions<br>Low<br>Test By: XZC | GFSK | H |
|---|---|---|---|

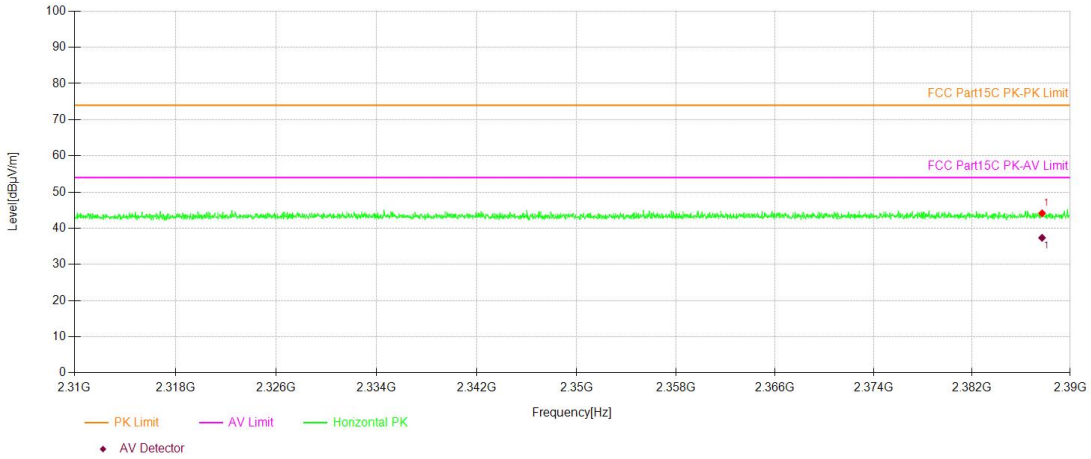

| Test Model | Band Emissions<br>High<br>Test By: XZC | GFSK | V |
|---|---|---|---|

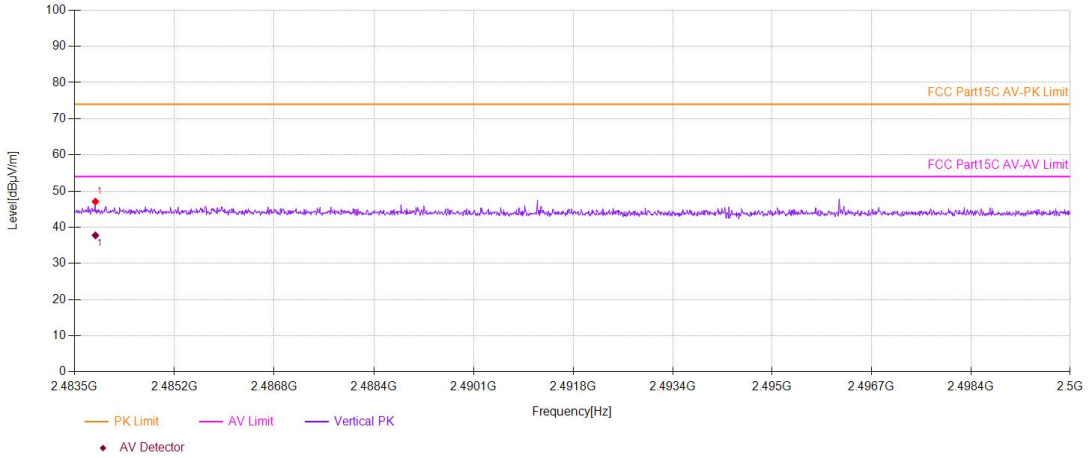


| Test Model | Band Emissions<br>High<br>Test By: XZC | GFSK | H |
|---|---|---|---|

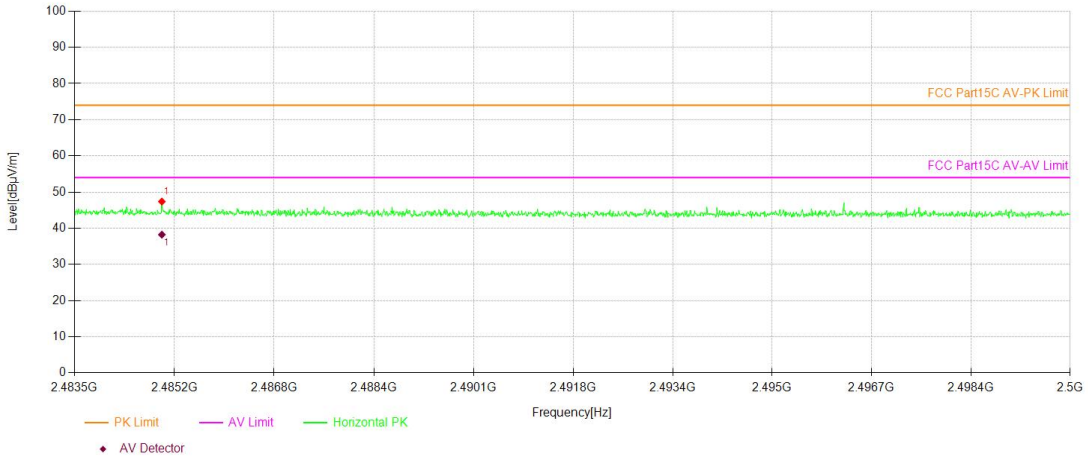

■ Spurious Emission Above 1GHz (1GHz to 25GHz)
All the antenna(Antenna 1) and modes(GFSK) mode have been tested, and the worst(Antenna 1,GFSK) resultrecorded was report as below:

Test mode: GFSK Frequency: Channel : 2405MHz

| Freq. (MHz) | Ant.Pol. H/V | Emission Level(dBuV/m) PK | Emission Level(dBuV/m) AV | Limit 3m(dBuV/m) PK | Limit 3m(dBuV/m) AV | Over(dB) PK | Over(dB) AV |
|---|---|---|---|---|---|---|---|
| 11460 | V | 59.15 | 47.33 | 74 | 54 | -14.85 | -6.67 |
| 14625 | V | 63.59 | 48.22 | 74 | 54 | -10.41 | -5.78 |
| 17643.75 | V | 67.64 | 48.95 | 74 | 54 | -6.36 | -5.05 |
| 11242.5 | H | 58.55 | 46.45 | 74 | 54 | -15.45 | -7.55 |
| 14658.75 | H | 64.07 | 47.49 | 74 | 54 | -9.93 | -6.51 |
| 17970 | H | 67.81 | 47.57 | 74 | 54 | -6.19 | -6.43 |

Test mode: GFSK Frequency: Channel : 2440MHz

| Freq. (MHz) | Ant.Pol. H/V | Emission Level(dBuV/m) PK | Emission Level(dBuV/m) AV | Limit 3m(dBuV/m) PK | Limit 3m(dBuV/m) AV | Over(dB) PK | Over(dB) AV |
|---|---|---|---|---|---|---|---|
| 11460 | V | 59.65 | 47.48 | 74 | 54 | -14.35 | -6.52 |
| 14625 | V | 64.09 | 48.22 | 74 | 54 | -9.91 | -5.78 |
| 17643.75 | V | 68.14 | 48.95 | 74 | 54 | -5.86 | -5.05 |
| 11373.75 | H | 58.88 | 47.18 | 74 | 54 | -15.12 | -6.82 |
| 14658.75 | H | 63.57 | 47.80 | 74 | 54 | -10.43 | -6.20 |
| 17970 | H | 67.31 | 48.23 | 74 | 54 | -6.69 | -5.77 |

Test mode: GFSK Frequency: Channel : 2475MHz

| Freq. (MHz) | Ant.Pol. H/V | Emission Level(dBuV/m) PK | Emission Level(dBuV/m) AV | Limit 3m(dBuV/m) PK | Limit 3m(dBuV/m) AV | Over(dB) PK | Over(dB) AV |
|---|---|---|---|---|---|---|---|
| 11460 | V | 59.55 | 59.55 | 74 | 54 | -14.45 | -6.14 |
| 14625 | V | 63.99 | 63.99 | 74 | 54 | -10.01 | -5.96 |
| 17643.75 | V | 68.04 | 68.04 | 74 | 54 | -5.96 | -4.69 |
| 11373.75 | H | 59.78 | 47.06 | 74 | 54 | -14.22 | -14.22 |
| 14658.75 | H | 64.47 | 47.46 | 74 | 54 | -9.53 | -9.53 |
| 17970 | H | 68.21 | 47.99 | 74 | 54 | -5.79 | -5.79 |

**Note:** (1) All Readings are Peak Value (VBW=3MHz) and Peak Value (VBW=10Hz).
(2) Emission Level= Reading Level+Correct Factor +Cable Loss.
(3) Correct Factor= Ant_F + Cab_L - Preamp
(4)Data of measurement within this frequency range shown " -- " in the table above means the reading of emissions are attenuated more than 20dB below the permissible limits or the field strength is too small to be measured.

■ Spurious Emission below 1GHz (30MHz to 1GHz)

All the antenna(Antenna 1) and modes(GFSK) mode have been tested, and the worst(Antenna 1,GFSK) resultrecorded was report as below:

| Mode: | 2405 |
|---|---|

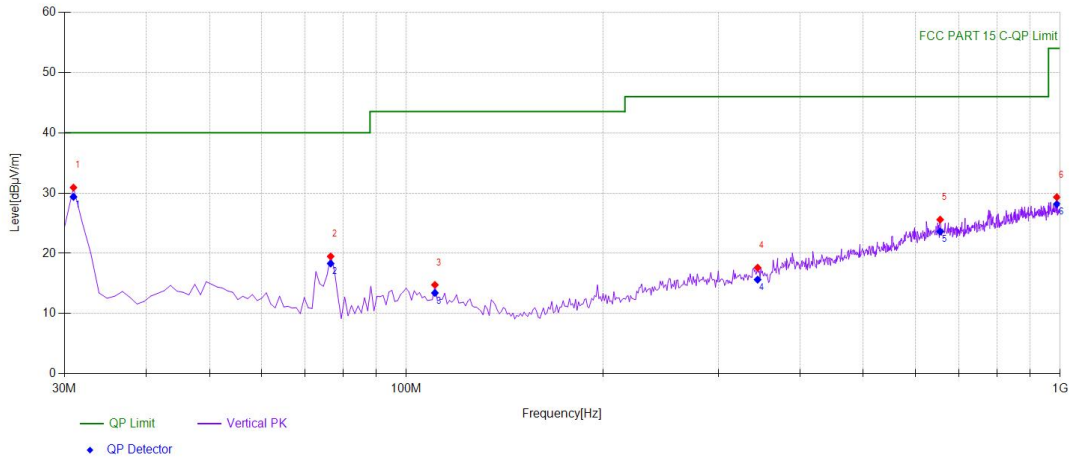


| Suspected Data List | | | | | | | | |
|---|---|---|---|---|---|---|---|---|
| NO. | Freq. [MHz] | Reading [dBµV] | Factor [dB/m] | Level [dBµV/m] | Detector | Limit [dBµV/m] | Margin [dB] | Polarity |
| 1 | 30.971 | 49.38 | -18.47 | 30.91 | PK | 40.00 | 9.09 | Vertical |
| 2 | 76.6066 | 40.47 | -20.98 | 19.49 | PK | 40.00 | 20.51 | Vertical |
| 3 | 110.5906 | 32.12 | -17.35 | 14.77 | PK | 43.50 | 28.73 | Vertical |
| 4 | 344.5946 | 31.08 | -13.46 | 17.62 | PK | 46.00 | 28.38 | Vertical |
| 5 | 655.3053 | 31.76 | -6.17 | 25.59 | PK | 46.00 | 20.41 | Vertical |
| 6 | 988.3483 | 31.03 | -1.71 | 29.32 | PK | 54.00 | 24.68 | Vertical |

| Mode: | 2405 |
|---|---|

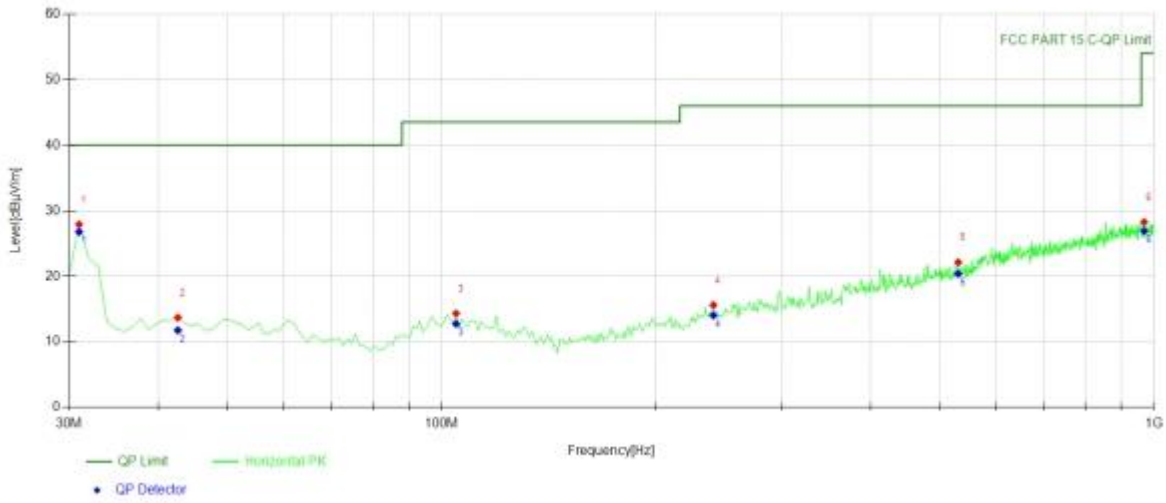


| Suspected Data List | | | | | | | | |
|---|---|---|---|---|---|---|---|---|
| NO. | Freq. [MHz] | Reading [dBµV] | Factor [dB/m] | Level [dBµV/m] | Detector | Limit [dBµV/m] | Margin [dB] | Polarity |
| 1 | 30.971 | 46.39 | -18.47 | 27.92 | PK | 40.00 | 12.08 | Horizontal |
| 2 | 42.6226 | 31.43 | -17.73 | 13.70 | PK | 40.00 | 26.30 | Horizontal |
| 3 | 104.7648 | 31.37 | -17.04 | 14.33 | PK | 43.50 | 29.17 | Horizontal |
| 4 | 240.7007 | 30.80 | -15.19 | 15.61 | PK | 46.00 | 30.39 | Horizontal |
| 5 | 531.021 | 31.60 | -9.47 | 22.13 | PK | 46.00 | 23.87 | Horizontal |
| 6 | 968.9289 | 30.34 | -2.06 | 28.28 | PK | 54.00 | 25.72 | Horizontal |

| Mode: | 2440 |
|---|---|

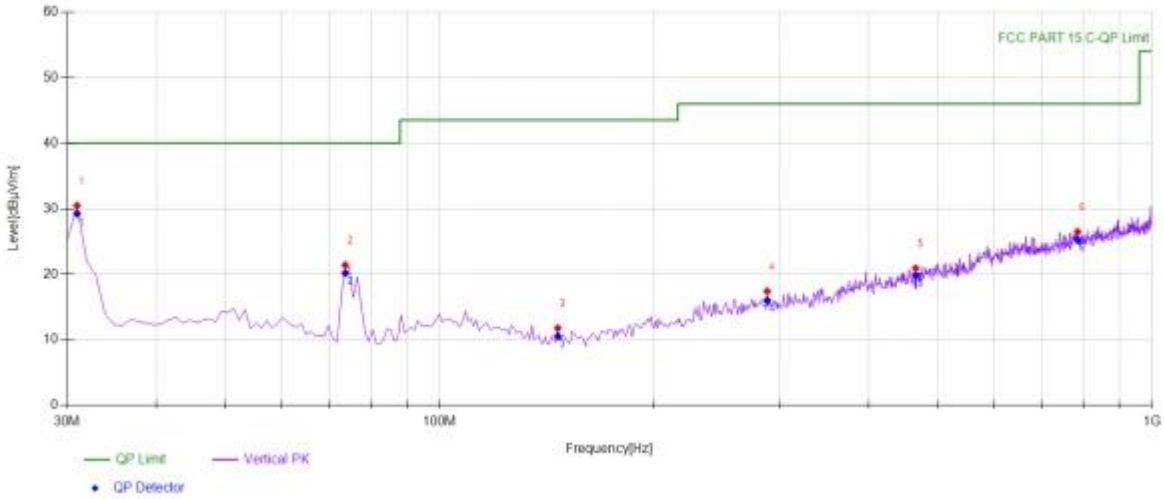


| Suspected Data List | | | | | | | | |
|---|---|---|---|---|---|---|---|---|
| NO. | Freq. [MHz] | Reading [dBµV] | Factor [dB/m] | Level [dBµV/m] | Detector | Limit [dBµV/m] | Margin [dB] | Polarity |
| 1 | 30.971 | 48.93 | -18.47 | 30.46 | PK | 40.00 | 9.54 | Vertical |
| 2 | 73.6937 | 41.92 | -20.53 | 21.39 | PK | 40.00 | 18.61 | Vertical |
| 3 | 146.5165 | 31.63 | -19.84 | 11.79 | PK | 43.50 | 31.71 | Vertical |
| 4 | 288.2783 | 31.58 | -14.16 | 17.42 | PK | 46.00 | 28.58 | Vertical |
| 5 | 465.966 | 31.57 | -10.67 | 20.90 | PK | 46.00 | 25.10 | Vertical |
| 6 | 786.3864 | 31.05 | -4.56 | 26.49 | PK | 46.00 | 19.51 | Vertical |

| Mode: | 2440 |
|---|---|

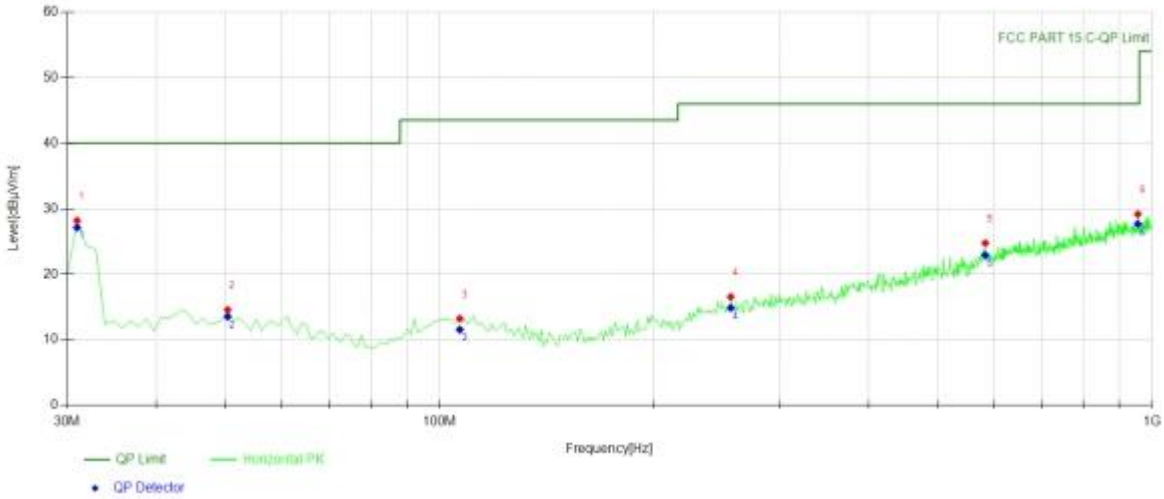


| Suspected Data List | | | | | | | | |
|---|---|---|---|---|---|---|---|---|
| NO. | Freq. [MHz] | Reading [dBµV] | Factor [dB/m] | Level [dBµV/m] | Detector | Limit [dBµV/m] | Margin [dB] | Polarity |
| 1 | 30.971 | 46.65 | -18.47 | 28.18 | PK | 40.00 | 11.82 | Horizontal |
| 2 | 50.3904 | 31.84 | -17.26 | 14.58 | PK | 40.00 | 25.42 | Horizontal |
| 3 | 106.7067 | 30.40 | -17.15 | 13.25 | PK | 43.50 | 30.25 | Horizontal |
| 4 | 256.2362 | 31.73 | -15.17 | 16.56 | PK | 46.00 | 29.44 | Horizontal |
| 5 | 583.4535 | 31.90 | -7.14 | 24.76 | PK | 46.00 | 21.24 | Horizontal |
| 6 | 955.3353 | 31.47 | -2.30 | 29.17 | PK | 46.00 | 16.83 | Horizontal |

| Mode: | 2475 |
|---|---|

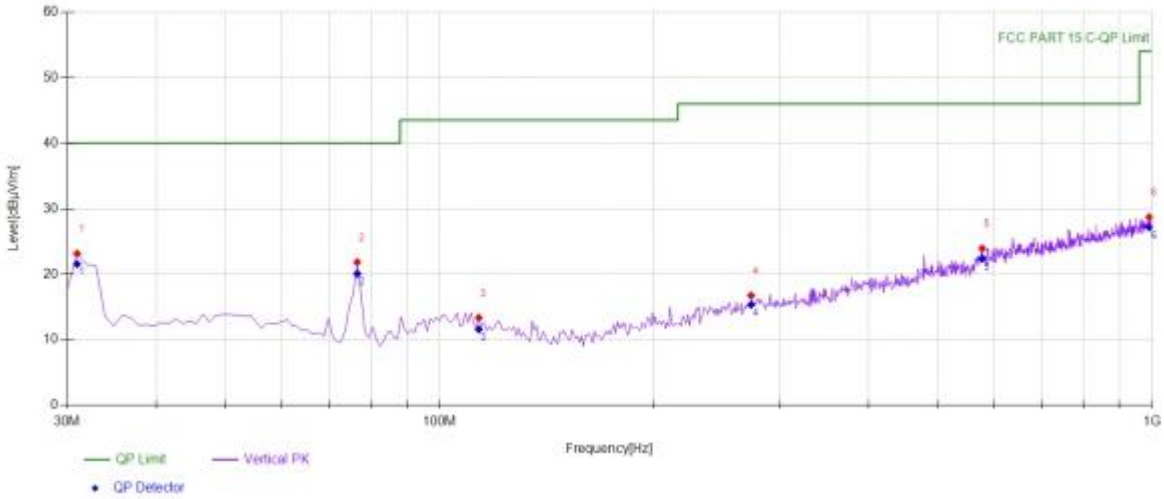


| Suspected Data List | | | | | | | | |
|---|---|---|---|---|---|---|---|---|
| NO. | Freq. [MHz] | Reading [dBµV] | Factor [dB/m] | Level [dBµV/m] | Detector | Limit [dBµV/m] | Margin [dB] | Polarity |
| 1 | 30.971 | 41.62 | -18.47 | 23.15 | PK | 40.00 | 16.85 | Vertical |
| 2 | 76.6066 | 42.83 | -20.98 | 21.85 | PK | 40.00 | 18.15 | Vertical |
| 3 | 113.5035 | 30.91 | -17.53 | 13.38 | PK | 43.50 | 30.12 | Vertical |
| 4 | 273.7137 | 31.30 | -14.54 | 16.76 | PK | 46.00 | 29.24 | Vertical |
| 5 | 577.6276 | 31.29 | -7.35 | 23.94 | PK | 46.00 | 22.06 | Vertical |
| 6 | 991.2613 | 30.42 | -1.70 | 28.72 | PK | 54.00 | 25.28 | Vertical |

| Mode: | 2475 |
|---|---|

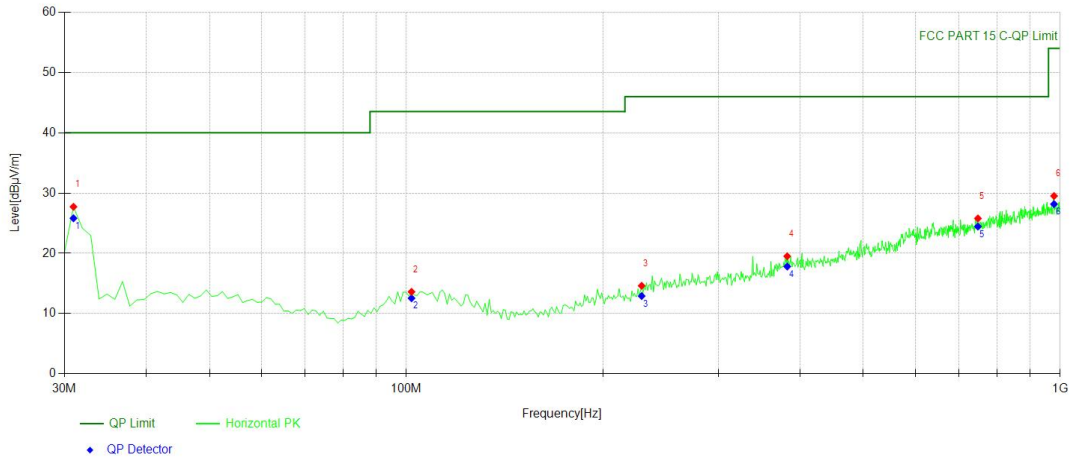


| Suspected Data List | | | | | | | | |
|---|---|---|---|---|---|---|---|---|
| NO. | Freq. [MHz] | Reading [dBμV] | Factor [dB/m] | Level [dBμV/m] | Detector | Limit [dBμV/m] | Margin [dB] | Polarity |
| 1 | 30.971 | 46.19 | -18.47 | 27.72 | PK | 40.00 | 12.28 | Horizontal |
| 2 | 101.8519 | 30.52 | -16.90 | 13.62 | PK | 43.50 | 29.88 | Horizontal |
| 3 | 229.049 | 30.86 | -16.24 | 14.62 | PK | 46.00 | 31.38 | Horizontal |
| 4 | 382.4625 | 31.35 | -11.83 | 19.52 | PK | 46.00 | 26.48 | Horizontal |
| 5 | 748.5185 | 31.12 | -5.33 | 25.79 | PK | 46.00 | 20.21 | Horizontal |
| 6 | 978.6386 | 31.33 | -1.82 | 29.51 | PK | 54.00 | 24.49 | Horizontal |

## 8.3 CONDUCTED EMISSIONS TEST

### 8.3.1 Applicable Standard

According to FCC Part 15.207(a)
RSS-GEN Clause 8.8

### 8.3.2 Conformance Limit

| Conducted Emission Limit | | |
|---|---|---|
| Frequency(MHz) | Quasi-peak | Average |
| 0.15-0.5 | 66-56 | 56-46 |
| 0.5-5.0 | 56 | 46 |
| 5.0-30.0 | 60 | 50 |

Note: 1. The lower limit shall apply at the transition frequencies
2. The limit decreases in line with the logarithm of the frequency in the range of 0.15 to 0.50MHz.

### 8.3.3 Test Configuration

Test according to clause 7.3 conducted emission test setup

### 8.3.4 Test Procedure

The EUT was placed on a table which is 0.8m above ground plane.
Maximum procedure was performed on the highest emissions to ensure EUT compliance.
Repeat above procedures until all frequency measured were complete.

### 8.3.5 Test Results

**N/A**

## 8.4 ANTENNA APPLICATION

### 8.4.1 Antenna Requirement

| Standard | Requirement |
|---|---|
| FCC CRF Part 15.203 | An intentional radiator shall be designed to ensure that no antenna other than that furnished by the responsible party shall be used with the device. The use of a permanently attached antenna or of an antenna that uses a unique coupling to the intentional radiator shall be considered sufficient to comply with the provisions of this section. The manufacturer may design the unit so that a broken antenna can be replaced by the user, but the use of a standard antenna jack or electrical connector is prohibited. This requirement does not apply to carrier current devices or to devices operated under the provisions of §15.211, §15.213, §15.217, §15.219, or §15.221. Further, this requirement does not apply to intentional radiators that must be professionally installed, such as perimeter protection systems and some field disturbance sensors, or to other intentional radiators which, in accordance with §15.31(d), must be measured at the installation site. However, the installer shall be responsible for ensuring that the proper antenna is employed so that the limits in this part are not exceeded. |
| RSS-GEN Clause 6.8 | An intentional radiator shall be designed to ensure that no antenna other than that furnished by the responsible party shall be used with the device. The use of a permanently attached antenna or of an antenna that uses a unique coupling to the intentional radiator shall be considered sufficient to comply with the provisions of this section. The manufacturer may design the unit so that a broken antenna can be replaced by the user, but the use of a standard antenna jack or electrical connector is prohibited. This requirement does not apply to carrier current devices or to devices operated under the provisions of RSS-GEN Clause 6.8. Further, this requirement does not apply to intentional radiators that must be professionally installed, such as perimeter protection systems and some field disturbance sensors, or to other intentional radiators which, in accordance with RSS-GEN Clause 6.8, must be measured at the installation site. However, the installer shall be responsible for ensuring that the proper antenna is employed so that the limits in this part are not exceeded. |

For intentional device, according to FCC 47 CFR Section 15.203, an intentional radiator shall be designed to ensure that no antenna other than that furnished by the responsible party shall be used with the device.

### 8.4.2 Result

PASS.

Note:
- ☑ Antenna use a permanently attached antenna which is not replaceable.
- ☐ Not using a standard antenna jack or electrical connector for antenna replacement
- ☐ The antenna has to be professionally installed (please provide method of installation)

Which in accordance to section 15.203 and RSS-GEN Clause 6.8, please refer to the internal photos.

--------- END OF REPORT --------