FCC Test Report

Report No.	:	**1811C50045012501**
Applicant	:	**FUJIAN YANAN POWER CO.,LTD.**
Address	:	**No.6, Shugang Road, Zhangwan Industrial Park, Dongqiao Economic Development Zone, Ningde City, Fujian Province, China**
Product Name	:	**PORTABLE POWER STATION**
Report Date	:	**2025-06-04**

Shenzhen Anbotek Compliance Laboratory Limited

Contents

1. General Information 5
1.1. Client Information 5
1.2. Description of Device (EUT) 5
1.3. Auxiliary Equipment Used During Test 7
1.4. Description of Test Modes 7
1.5. Description Of Test Setup 8
1.6. Test Equipment List 9
1.7. Measurement Uncertainty 10
1.8. Description of Test Facility 10
1.9. Disclaimer 11
2. Summary of Test Results 12
3. Conducted Emission Test 13
3.1. Test Standard and Limit 13
3.2. Test Setup 13
3.3. Test Procedure 13
3.4. Test Data 13
4. Radiation Spurious Emission Test 16
4.1. Test Standard and Limit 16
4.2. Test Setup 16
4.3. Test Procedure 17
4.4. Test Data 17
5. 20dB Occupy Bandwidth Test 22
5.1. Test Standard and Limit 22
5.2. Test Setup 22
5.3. Test Procedure 22
5.4. Test Data 22
6. Antenna Requirement 24
6.1. Test Standard and Requirement 24
6.2. Antenna Connected Construction 24
APPENDIX I -- TEST SETUP PHOTOGRAPH 25
APPENDIX II -- EXTERNAL PHOTOGRAPH 25
APPENDIX III -- INTERNAL PHOTOGRAPH 25

TEST REPORT

Applicant	:	FUJIAN YANAN POWER CO.,LTD.
Manufacturer	:	FUJIAN YANAN POWER CO.,LTD.
Product Name	:	PORTABLE POWER STATION
Model No.	:	YN-1000Pro, YN-1000
Trade Mark	:	
Rating(s)	:	Please refer to the page 6.
Test Standard(s)	**:**	**FCC Part15 Subpart C**
Test Method(s)	**:**	**ANSI C63.10: 2020**

The device described above is tested by Shenzhen Anbotek Compliance Laboratory Limited to determine the maximum emission levels emanating from the device and the severe levels of the device can endure and its performance criterion. The measurement results are contained in this test report and Shenzhen Anbotek Compliance Laboratory Limited is assumed full of responsibility for the accuracy and completeness of these measurements. Also, this report shows that the EUT (Equipment Under Test) is technically compliant with the FCC Part 15 Subpart C requirements.

This report applies to above tested sample only and shall not be reproduced in part without written approval of Shenzhen Anbotek Compliance Laboratory Limited.

Date of Receipt	2025-03-20
Date of Test	2025-03-20 to 2025-04-16
Prepared By	Haidi Huang (Haidi Huang)
Approved & Authorized Signer	Hugo Chen (Hugo Chen)

Shenzhen Anbotek Compliance Laboratory Limited
Address: Sogood Industrial Zone Laboratory & 1/F. of Building D, Sogood Science and Technology Park, Sanwei Community, Hangcheng Subdistrict, Bao'an District, Shenzhen, Guangdong, China
Tel:(86)0755-26066440 Email: service@anbotek.com
Hotline 400-003-0500
www.anbotek.com

Revision History

Report Version	Description	Issued Date
R00	Original Issue.	2025-06-04

Shenzhen Anbotek Compliance Laboratory Limited
Address: Sogood Industrial Zone Laboratory & 1/F. of Building D, Sogood Science and Technology Park, Sanwei Community, Hangcheng Subdistrict, Bao'an District, Shenzhen, Guangdong, China
Tel:(86)0755-26066440 Email: service@anbotek.com
Hotline 400-003-0500
www.anbotek.com

1. General Information

1.1. Client Information

Applicant	:	FUJIAN YANAN POWER CO.,LTD.
Address	:	No.6, Shugang Road, Zhangwan Industrial Park, Dongqiao Economic Development Zone, Ningde City, Fujian Province, China
Manufacturer	:	FUJIAN YANAN POWER CO.,LTD.
Address	:	No.6, Shugang Road, Zhangwan Industrial Park, Dongqiao Economic Development Zone, Ningde City, Fujian Province, China
Factory	:	FUJIAN YANAN POWER CO.,LTD.
Address	:	No.6, Shugang Road, Zhangwan Industrial Park, Dongqiao Economic Development Zone, Ningde City, Fujian Province, China

1.2. Description of Device (EUT)

Product Name	:	PORTABLE POWER STATION
Model No.	:	YN-1000Pro, YN-1000 (Note: All samples are the same except the model number, so we prepare "YN-1000Pro" for test only.)
Trade Mark	:	
Test Power Supply	:	DC 24V from adapter input AC 120V/60Hz
Test Sample No.	:	1-2-1(Normal Sample), 1-2-2(Engineering Sample)
Adapter	:	Manufacturer: N-TECH ELECTRONICS.,LTD Model: NT-2400625D1 Input: 100-240V~, 50/60Hz, 2.5A Max Output: 24V⎓6.25A, 150W
RF Specification		
Operation Frequency	:	125-205kHz
Modulation Type	:	ASK
Antenna Type	:	Inductive loop coil Antenna
Remark: 1) All of the RF specification are provided by customer. 2) For a more detailed features description, please refer to the manufacturer's specifications or the User's Manual.		

Rating(s):

SLG | PORTABLE POWER STATION

- Type: YN-1000Pro
- Battery Capacity: 22.2V, 45Ah/999Wh
- DC/PV Input: 12V-26V, 155W Max
- AC Output: Pure Sine Wave, 110V~60Hz, 1000W
- AC Parallel Interface: 1000W
- After Being Connected AC Output: 2000W
- DC Output ×2 + Cigarette Lighter Socket Output: Total 12V⎓10A
- USB-A Output ×3: 5V⎓3A, 9V⎓2A, 12V⎓1.5A, 18W Max
- USB-C Output: 5V/9V/12V/15V/20V⎓3A, 60W Max
- Wireless Charge: 10W
- Operating Temp: 14 to 104°F (-10 to 40°C)
- Charging Temp: 32 to 104°F (0 to 40°C)
- Date Code:

3.06.04.0814

This device complies with part 15 of the FCC Rules. Operation is subject to the following two conditions: (1) This device may not cause harmful interference, and (2) this device must accept any interference received, including interference that may cause undesired operation.
FCC ID: 2BCSHYN1000PMV1000

⚠ WARNING!

- Do not short-circuit the unit. To avoid short-circuiting, keep the unit away from all metal objects (e.g.coins, hair-pins, keys, etc.) .
- Do not heat the unit, or dispose of it in fire, water or other liquids. Keep away from high temperatures.
- Do not expose the unit to direct sunlight. Keep away from high humidity, dusty places.
- Do not disassemble or reassemble this unit.
- Do not drop and place heavy objects on, or allow strong impact to this unit.
- This appliance is not intended for use by persons (including children) with reduced physical, sensory or mental capabilities, or lack of experience and knowledge, unless they have been given supervision or instruction concerning use of the appliance by a person responsible for their safety.
- Children should be supervised to ensure that they do not play with the appliance.
- The unit may become hot when charging. This is normal. Be careful when handling.
- Use the unit properly to avoid electronic shock.
- The product is only used for emergency power station, it can not replace the standard DC or AC power of household appliances or digital products.
- Do not overcharge the internal battery. See Instruction Manual.

⚠ AVERTISSEMENT!

- Ne court-circuitez pas l'appareil. Pour éviter tout court-circuit, éloignez l'appareil de tout objet mé tallique (par exemple, pièces de monnaie, épingles à cheveux, clés, etc.).
- Ne chauffez pas l'appareil et ne le jetez pas dans le feu, l'eau ou d'autres liquides. Tenir à l'écart des températures élevées. N'exposez pas l'appareil à la lumière directe du soleil.
- Tenir à l'écart des endroits humides et poussiéreux.
- Ne démontez pas et ne réassemblez pas cet appareil.
- Ne laissez pas tomber, ne placez pas d'objets lourds dessus et ne laissez pas de chocs violents sur cet appareil.
- Cet appareil n'est pas destiné à être utilisé par des personnes(y compris des enfants) ayant des capacités physiques, sensorielles ou mentales réduites, ou un manque d'expérience et de connaissances, à moins qu'elles n'aient reçu une supervision ou des instructions concernant.
- L'utilisation de l'appareil par une personne responsable de leur sécurité.
- Les enfants doivent être surveillés pour s'assurer qu'ils ne jouent pas avec l'appareil.
- L'appareil peut devenir chaud pendant la charge. C'est normal. Soyez prudent lors de la manipulation.
- Utilisez l'appareil correctement pour éviter les chocs électroniques. Le produit n'est utilisé que pour la centrale électrique de secours, il ne peut pas remplacer l'alimentation CC ou CA standard des appareils ménagers ou des produits numériques.
- Ne pas surcharger la batterie interne. Consulter le manuel d'utilisation.

CE FC RoHs UN38.3 Li-ion

MADE IN CHINA

1.3. Auxiliary Equipment Used During Test

Title	Manufacturer	Model No.	Serial No.
Wireless load	BAECOAR	15W Smart wireless charger fixture wireless charging	/

1.4. Description of Test Modes

To investigate the maximum EMI emission characteristics generates from EUT, the test system was pre-scanning tested base on the consideration of following EUT operation mode or test configuration mode which possible have effect on EMI emission level. Each of these EUT operation mode(s) or test configuration mode(s) mentioned above was evaluated respectively.

Pretest Modes	Descriptions
TM1	WTP Mode (10W 1% Load)
TM2	WTP Mode (10W 50% Load)
TM3	WTP Mode (10W 99% Load)
TM4	Standby Mode

1.5. Description Of Test Setup

CE

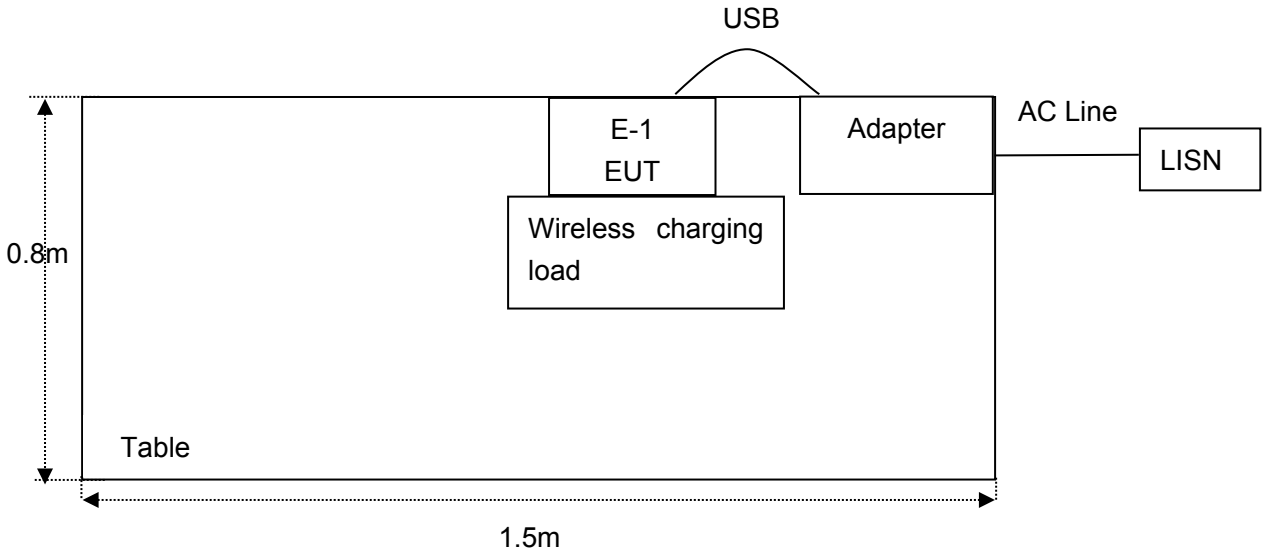

RE

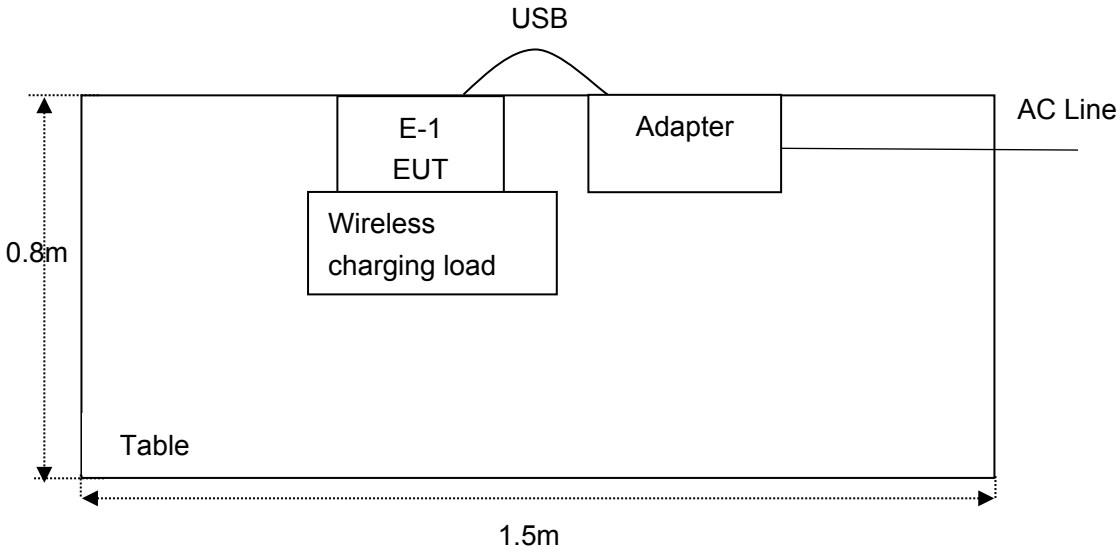

1.6. Test Equipment List

Item	Equipment	Manufacturer	Model No.	Serial No.	Last Cal.	Cal. Interval
1.	L.I.S.N. Artificial Mains Network	Rohde & Schwarz	ENV216	100055	Sep. 09, 2024	1 Year
2.	Three Phase V-type Artificial Power Network	CYBERTEK	EM5040DT	E215040DT001	Jan. 13, 2025	1 Year
3.	EMI Test Receiver	Rohde & Schwarz	ESCI	100627	Jan. 13, 2025	1 Year
4.	EMI Test Receiver	Rohde & Schwarz	ESR26	101481	Jan. 14, 2025	1 Year
5.	MXA Spectrum Analysis	Agilent	N9020A	MY51170037	Sep. 09, 2024	1 Year
6.	EMI Preamplifier	SKET Electronic	LNPA-0118G-45	SKET-PA-002	Jan. 13, 2025	1 Year
7.	Double Ridged Horn Antenna	SCHWARZBECK	BBHA 9120D	02555	Oct. 16, 2022	3 Year
8.	Bilog Broadband Antenna	Schwarzbeck	VULB9163	345	Oct. 23, 2022	3 Year
9.	Loop Antenna(9K-30M)	Schwarzbeck	FMZB1519B	00053	Sep. 12, 2024	1 Year
10.	Horn Antenna	A-INFO	LB-180400-KF	J211060628	Jan. 22, 2024	3 Year
11.	Pre-amplifier	SONOMA	310N	186860	Jan. 14, 2025	1 Year
12.	EMI Test Software EZ-EMC	SHURPLE	N/A	N/A	N/A	N/A
13.	MXA Spectrum Analysis	KEYSIGHT	N9020A	MY53280032	Sep. 09, 2024	1 Year
14.	MXG RF Vector Signal Generator	Agilent	N5182A	MY47420647	Jan. 14, 2025	1 Year
15.	Signal Generator	Agilent	E4421B	MY41000743	Feb. 21, 2025	1 Year
16.	DC Power Supply	IVYTECH	IV3605	1804D360510	Sep. 09, 2024	1 Year
17.	Constant Temperature Humidity Chamber	ZHONGJIAN	ZJ-KHWS80B	N/A	Oct. 14, 2024	1 Year
18.	Spectrum Analyzer	Rohde & Schwarz	FSV40-N	102150	May. 06, 2024	1 Year

1.7. Measurement Uncertainty

Parameter	Uncertainty
Conducted emissions (AMN 150kHz~30MHz)	3.2dB
Occupied Bandwidth	925Hz
Radiated spurious emissions (Below 30MHz)	3.26dB
Radiated spurious emissions (30MHz~1GHz)	Horizontal: 3.70dB; Vertical: 4.42dB
The measurement uncertainty and decision risk evaluated according to AB/WI-RF-F-032. This uncertainty represents an expanded uncertainty expressed at approximately the 95% confidence level using a coverage factor of k=2.	

1.8. Description of Test Facility

The test facility is recognized, certified, or accredited by the following organizations:

FCC-Registration No.: 279531

Shenzhen Anbotek Compliance Laboratory Limited, EMC Laboratory has been registered and fully described in a report filed with the (FCC) Federal Communications Commission. The acceptance letter from the FCC is maintained in our files. Registration No. 279531.

Test Location

Shenzhen Anbotek Compliance Laboratory Limited.
Sogood Industrial Zone Laboratory & 1/F. of Building D, Sogood Science and Technology Park, Sanwei Community, Hangcheng Subdistrict, Bao'an District, Shenzhen, Guangdong, China.

1.9. Disclaimer

1. The test report is invalid if not marked with the signatures of the persons responsible for preparing and approving the test report.
2. The test report is invalid if there is any evidence and/or falsification.
3. The results documented in this report apply only to the tested sample, under the conditions and modes of operation as described herein.
4. This document may not be altered or revised in any way unless done so by Anbotek and all revisions are duly noted in the revisions section.
5. Content of the test report, in part or in full, cannot be used for publicity and/or promotional purposes without prior written approval from the laboratory.
6. The authenticity of the information provided by the customer is the responsibility of the customer and the laboratory is not responsible for its authenticity.
7. The data in this report will be synchronized with the corresponding national market supervision and management departments and cross-border e-commerce platforms as required by regulatory agencies.

The laboratory is only responsible for the data released by the laboratory, except for the part provided by the applicant.

2. Summary of Test Results

Standard Section	Test Item	Result
15.203	Antenna Requirement	PASS
15.207	Conducted Emission Test	PASS
15.205/15.209	Spurious Emission	PASS
15.215(c)	20dB Occupy Bandwidth	PASS

Note: N/A" denotes test is not applicable in this Test Report

3. Conducted Emission Test

3.1. Test Standard and Limit

Test Standard	FCC Part15 Section 15.207		
Test Limit	Frequency	Maximum RF Line Voltage (dBuV)	
		Quasi-peak Level	Average Level
	150kHz~500kHz	66 ~ 56 *	56 ~ 46 *
	500kHz~5MHz	56	46
	5MHz~30MHz	60	50
Remark: (1) *Decreasing linearly with logarithm of the frequency. (2) The lower limit shall apply at the transition frequency.			

3.2. Test Setup

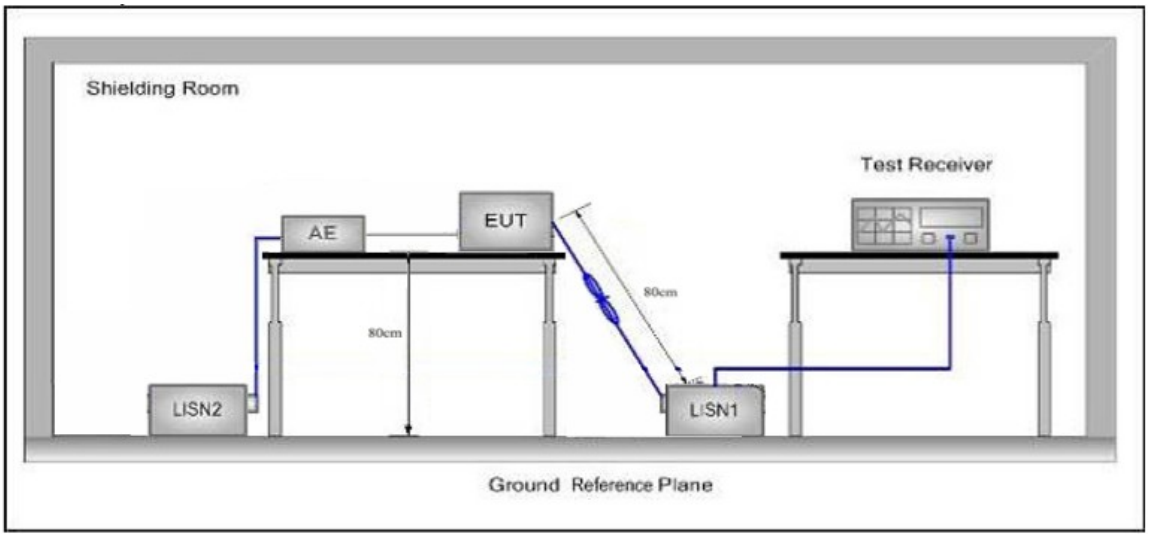

3.3. Test Procedure

The EUT system is connected to the power mains through a line impedance stabilization network (L.I.S.N.). This provides a 50ohm coupling impedance for the EUT system. Please refer the block diagram of the test setup and photographs. Both sides of AC line are checked to find out the maximum conducted emission. In order to find the maximum emission levels, the relative positions of equipment and all of the interface cables shall be changed according to FCC ANSI C63.10: 2020 on Conducted Emission Measurement.

The bandwidth of test receiver (ESCI) set at 9kHz.

The frequency range from 150kHz to 30MHz is checked.

3.4. Test Data

PASS

During the test, pre-scan all modes, only the worst case is recorded in the report.
Please to see the following pages.

Shenzhen Anbotek Compliance Laboratory Limited
Address: Sogood Industrial Zone Laboratory & 1/F. of Building D, Sogood Science and Technology Park, Sanwei Community, Hangcheng Subdistrict, Bao'an District, Shenzhen, Guangdong, China
Tel:(86)0755-26066440 Email: service@anbotek.com
Hotline 400-003-0500
www.anbotek.com

Conducted Emission Test Data

Test Site: 1# Shielded Room
Operating Condition: TM1
Test Specification: DC 24V from adapter input AC 120V/60Hz
Comment: Live Line
Temp.(℃)/Hum.(%RH): 22.1℃/50%RH

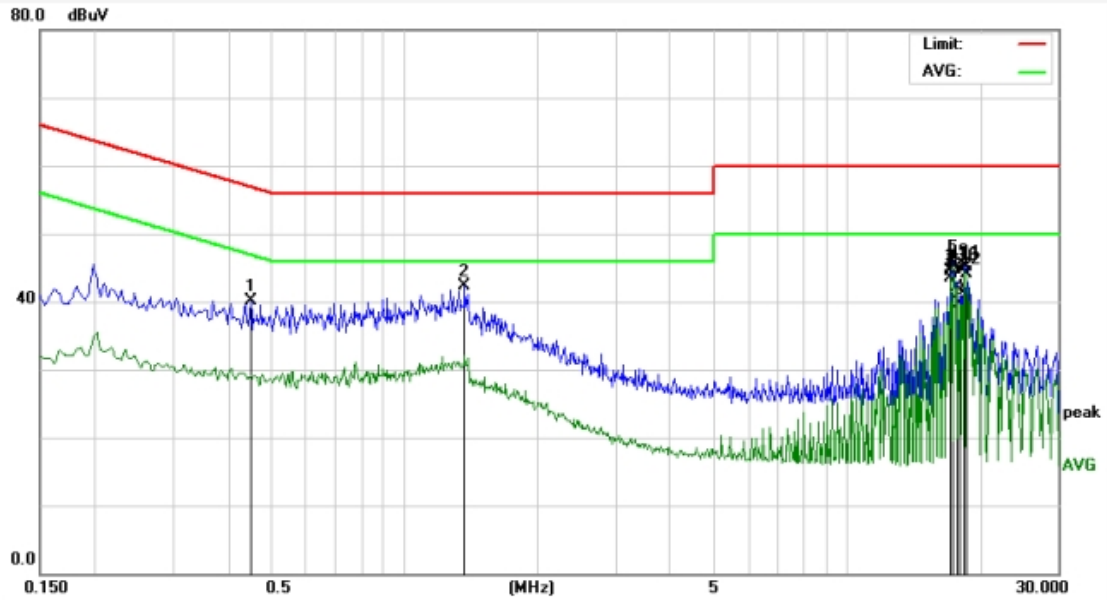

No.	Freq. (MHz)	Reading (dBuV)	Factor (dB)	Result (dBuV)	Limit (dBuV)	Over Limit (dB)	Detector	Remark
1	0.4500	22.35	17.83	40.18	56.87	-16.69	QP	
2	1.3700	24.47	17.86	42.33	56.00	-13.67	QP	
3	17.1460	26.27	18.20	44.47	60.00	-15.53	QP	
4	17.1460	25.24	18.20	43.44	50.00	-6.56	AVG	
5	17.3980	27.60	18.21	45.81	60.00	-14.19	QP	
6	17.3980	27.01	18.21	45.22	50.00	-4.78	AVG	
7	17.7780	23.87	18.23	42.10	50.00	-7.90	AVG	
8	18.0340	21.48	18.23	39.71	50.00	-10.29	AVG	
9	18.4140	27.03	18.24	45.27	60.00	-14.73	QP	
10	18.4140	26.54	18.24	44.78	50.00	-5.22	AVG	
11	18.6700	26.95	18.24	45.19	60.00	-14.81	QP	
12	18.6700	25.85	18.24	44.09	50.00	-5.91	AVG	

Shenzhen Anbotek Compliance Laboratory Limited
Address: Sogood Industrial Zone Laboratory & 1/F. of Building D, Sogood Science and Technology Park, Sanwei Community, Hangcheng Subdistrict, Bao'an District, Shenzhen, Guangdong, China
Tel:(86)0755-26066440 Email: service@anbotek.com
Hotline 400-003-0500
www.anbotek.com

Conducted Emission Test Data

Test Site: 1# Shielded Room
Operating Condition: TM1
Test Specification: DC 24V from adapter input AC 120V/60Hz
Comment: Neutral Line
Temp.(℃)/Hum.(%RH): 22.1℃/50%RH

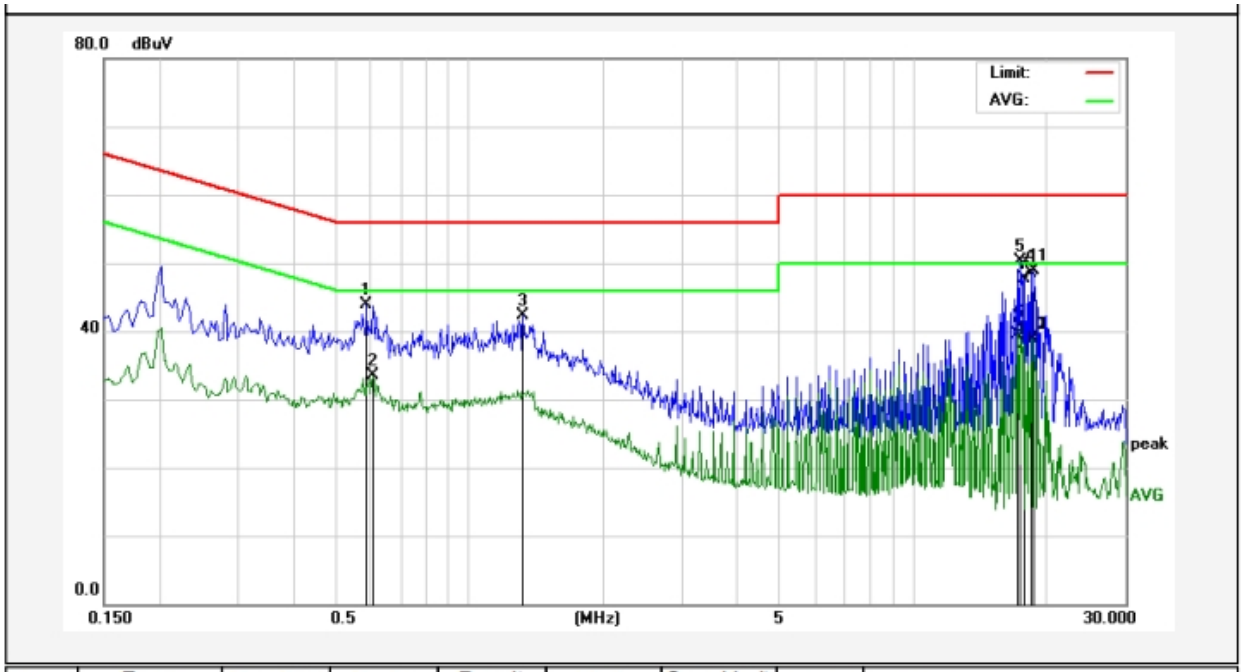

No.	Freq. (MHz)	Reading (dBuV)	Factor (dB)	Result (dBuV)	Limit (dBuV)	Over Limit (dB)	Detector	Remark
1	0.5860	26.03	17.86	43.89	56.00	-12.11	QP	
2	0.6060	15.61	17.87	33.48	46.00	-12.52	AVG	
3	1.3180	24.41	17.86	42.27	56.00	-13.73	QP	
4	17.1339	21.26	18.20	39.46	50.00	-10.54	AVG	
5	17.3899	32.02	18.21	50.23	60.00	-9.77	QP	
6	17.3899	22.48	18.21	40.69	50.00	-9.31	AVG	
7	17.7698	29.56	18.23	47.79	60.00	-12.21	QP	
8	17.7698	19.90	18.23	38.13	50.00	-11.87	AVG	
9	18.4059	30.28	18.24	48.52	60.00	-11.48	QP	
10	18.4059	20.60	18.24	38.84	50.00	-11.16	AVG	
11	18.6579	30.62	18.24	48.86	60.00	-11.14	QP	
12	18.6579	20.69	18.24	38.93	50.00	-11.07	AVG	

Shenzhen Anbotek Compliance Laboratory Limited
Address: Sogood Industrial Zone Laboratory & 1/F. of Building D, Sogood Science and Technology Park, Sanwei Community, Hangcheng Subdistrict, Bao'an District, Shenzhen, Guangdong, China
Tel:(86)0755-26066440 Email: service@anbotek.com
Hotline 400-003-0500
www.anbotek.com

4. Radiation Spurious Emission Test

4.1. Test Standard and Limit

Test Standard	FCC Part15 C Section 15.209 and 15.205				
Test Limit	Frequency (MHz)	Field strength (microvolt/meter)	Limit (dBuV/m)	Remark	Measurement distance (m)
	0.009MHz~0.490MHz	2400/F(kHz)	-	-	300
	0.490MHz-1.705MHz	24000/F(kHz)	-	-	30
	1.705MHz-30MHz	30	-	-	30
	30MHz~88MHz	100	40.0	Quasi-peak	3
	88MHz~216MHz	150	43.5	Quasi-peak	3
	216MHz~960MHz	200	46.0	Quasi-peak	3
	960MHz~1000MHz	500	54.0	Quasi-peak	3
	Above 1000MHz	500	54.0	Average	3
		-	74.0	Peak	3

Remark:
(1)The lower limit shall apply at the transition frequency.
(2) 15.35(b), Unless otherwise specified, the limit on peak radio frequency emissions is 20dB above the maximum permitted average emission limit applicable to the equipment under test. This peak limit applies to the total peak emission level radiated by the device.

4.2. Test Setup

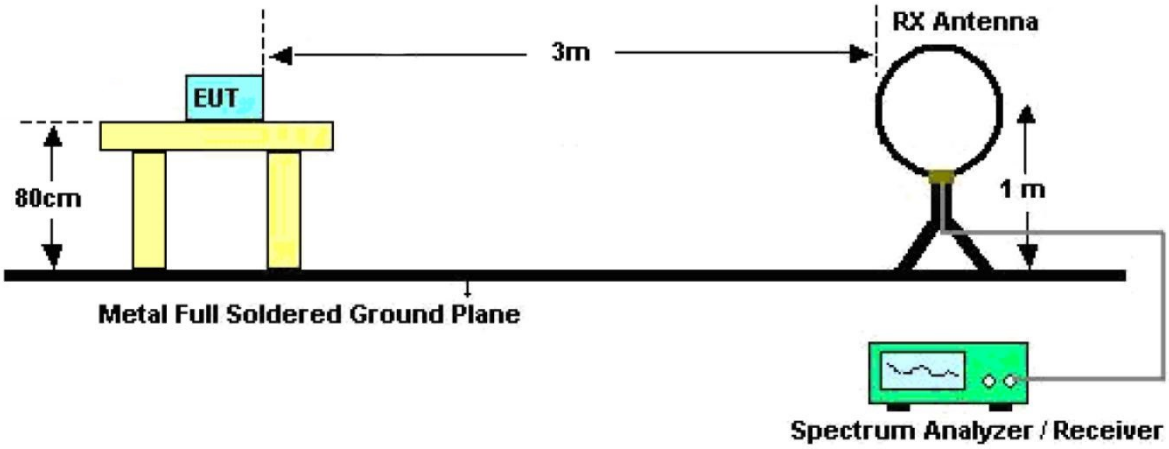

Figure 1. Below 30MHz

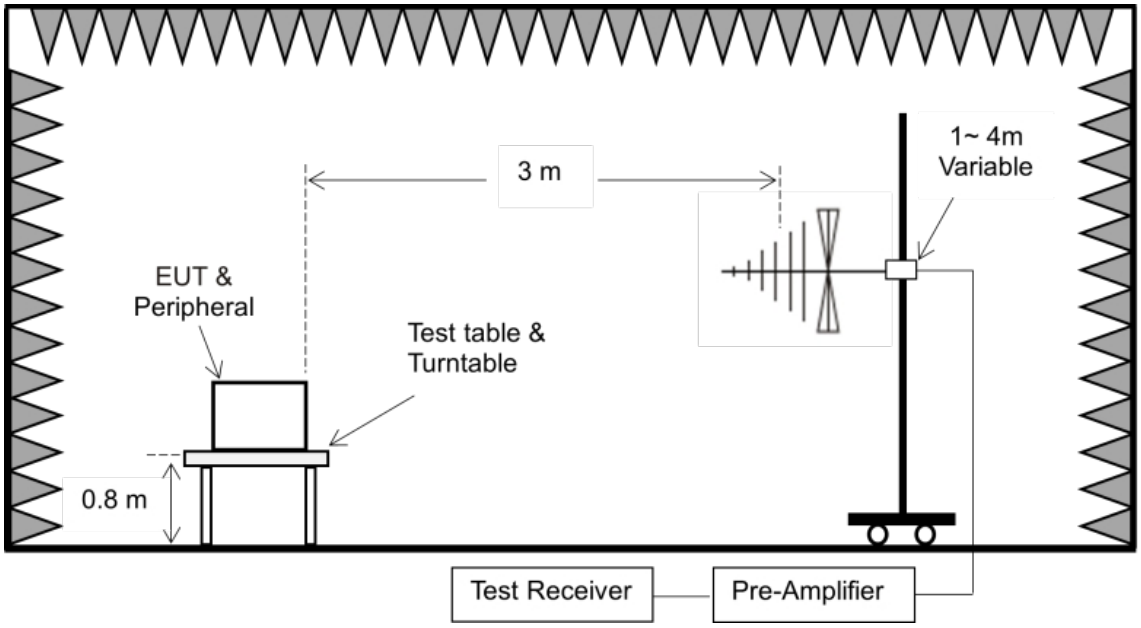

Figure 2. 30MHz to 1GHz

4.3. Test Procedure

For below 1GHz: The EUT is placed on a turntable, which is 0.8m above the ground plane.
The turn table can rotate 360 degrees to determine the position of the maximum emission level. The EUT is set 3 meters away from the receiving antenna which is mounted on a antenna tower. The antenna can be moved up and down from 1 to 4 meters to find out the maximum emission level. Rotated the EUT through three orthogonal axes to determine the maximum emissions, both horizontal and vertical polarization of the antenna are set on test. The EUT is tested in 9*6*6 Chamber. The device is evaluated in x/y/z orientation.

For 9kHz to 150kHz, Set the spectrum analyzer as:
RBW = 200Hz, VBW =1kHz, Detector= Quasi-Peak, Trace mode= Max hold, Sweep- auto couple.

For 150kHz to 30MHz, Set the spectrum analyzer as:
RBW = 9KHz, VBW =30kHz, Detector= Quasi-Peak, Trace mode= Max hold, Sweep- auto couple.

For 30MHz to 1000MHz, Set the spectrum analyzer as:
RBW = 100kHz, VBW =300kHz, Detector= Quasi-Peak, Trace mode= Max hold, Sweep- auto couple.

4.4. Test Data

PASS

During the test, pre-scan all modes, only the worst case is recorded in the report.
Please to see the following pages.

Test Results (Between 9KHz – 150KHz)

Test Mode: TM1
Distance: 3m
Power Source: DC 24V from adapter input AC 120V/60Hz
Polarization: Coplane
Temp.(℃)/Hum.(%RH): 25.1℃/49%RH

Fundamental

No.	Freq. (MHz)	Reading (dBuV)	Factor ()	Result (dBuV/m)	Limit (dBuV/m)	Over Limit (dB)	Detector	Remark
1	0.0100	20.19	20.09	40.28	127.40	-87.12	peak	
2	0.0171	15.64	20.14	35.78	122.77	-86.99	peak	
3	0.0223	13.11	20.34	33.45	120.47	-87.02	peak	
4	0.0364	15.29	20.44	35.73	116.24	-80.51	peak	
5	0.0529	9.41	20.38	29.79	113.02	-83.23	peak	
6	0.1280	26.77	20.34	47.11	105.39	-58.28	peak	

Test Results (Between 0.15MHz – 30MHz)

Test Mode:	TM1
Distance:	3m
Power Source:	DC 24V from adapter input AC 120V/60Hz
Polarization:	Coplane
Temp.(℃)/Hum.(%RH):	25.1℃/49%RH

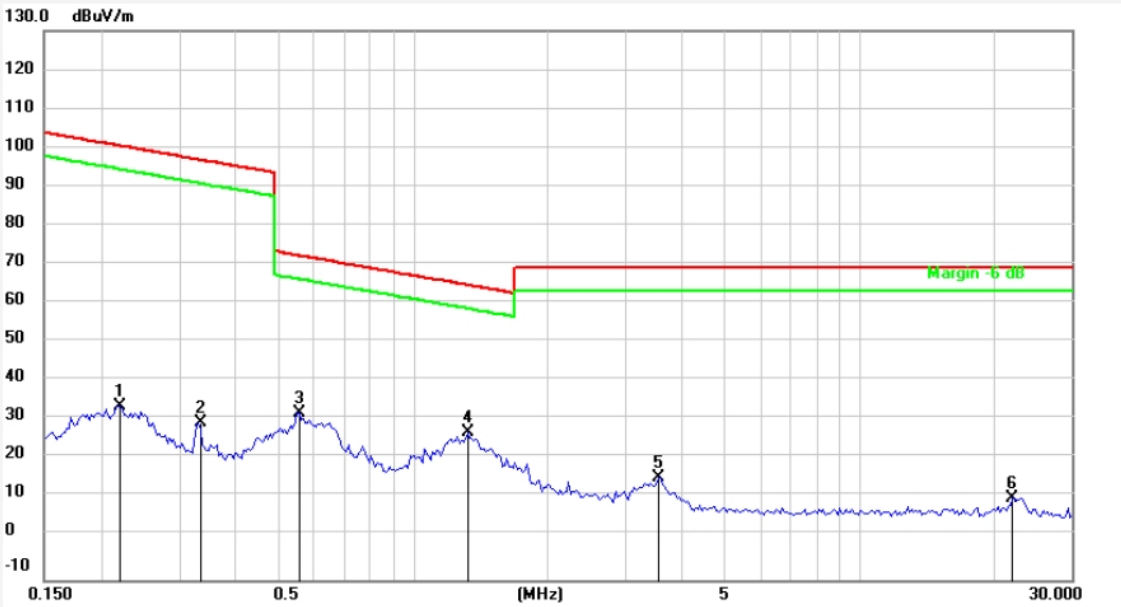

No.	Freq. (MHz)	Reading (dBuV)	Factor (dB/m)	Result (dBuV/m)	Limit (dBuV/m)	Over Limit (dB)	Detector	Remark
1	0.2197	13.96	20.30	34.26	100.72	-66.46	peak	
2	0.3321	9.85	20.29	30.14	97.16	-67.02	peak	
3	0.5581	12.40	20.28	32.68	72.67	-39.99	peak	
4	1.3306	7.23	20.26	27.49	65.15	-37.66	peak	
5	3.5653	-4.19	20.34	16.15	69.50	-53.35	peak	
6	22.0625	-9.76	20.60	10.84	69.50	-58.66	peak	

Remark: The emission limits shown in the above table are based on measurements employing a CISPR quasi-peak detector except for the frequency bands 9-90 kHz, 110-490 kHz and above 1000 MHz. Radiated emission limits in these three bands are based on measurements employing an average detector.

Shenzhen Anbotek Compliance Laboratory Limited
Address: Sogood Industrial Zone Laboratory & 1/F. of Building D, Sogood Science and Technology Park, Sanwei Community, Hangcheng Subdistrict, Bao'an District, Shenzhen, Guangdong, China
Tel:(86)0755-26066440 Email: service@anbotek.com
Hotline 400-003-0500
www.anbotek.com

Test Results (Between 30MHz –1000 MHz)

Test Mode:	TM1
Distance:	3m
Power Source:	DC 24V from adapter input AC 120V/60Hz
Polarization:	Horizontal
Temp.(℃)/Hum.(%RH):	25.1℃/49%RH

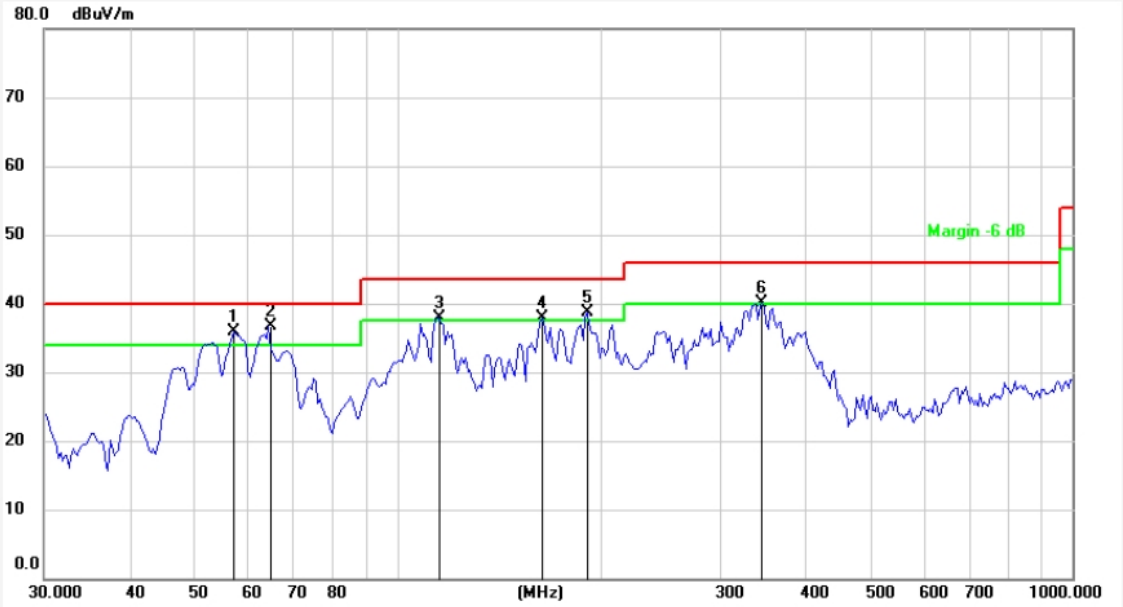

No.	Freq. (MHz)	Reading (dBuV)	Factor (dB/m)	Result (dBuV/m)	Limit (dBuV/m)	Over Limit (dB)	Detector	Remark
1	57.1914	52.58	-16.64	35.94	40.00	-4.06	QP	
2	64.4331	57.78	-21.01	36.77	40.00	-3.23	QP	
3	115.3205	57.19	-19.25	37.94	43.50	-5.56	QP	
4	163.7550	58.49	-20.61	37.88	43.50	-5.62	QP	
5	191.0738	57.67	-19.00	38.67	43.50	-4.83	QP	
6	346.8092	54.37	-14.20	40.17	46.00	-5.83	QP	

Shenzhen Anbotek Compliance Laboratory Limited
Address: Sogood Industrial Zone Laboratory & 1/F. of Building D, Sogood Science and Technology Park, Sanwei Community, Hangcheng Subdistrict, Bao'an District, Shenzhen, Guangdong, China
Tel:(86)0755-26066440 Email: service@anbotek.com
Hotline 400-003-0500
www.anbotek.com

Test Mode: TM1
Distance: 3m
Power Source: DC 24V from adapter input AC 120V/60Hz
Polarization: Vertical
Temp.(℃)/Hum.(%RH): 25.1℃/49%RH

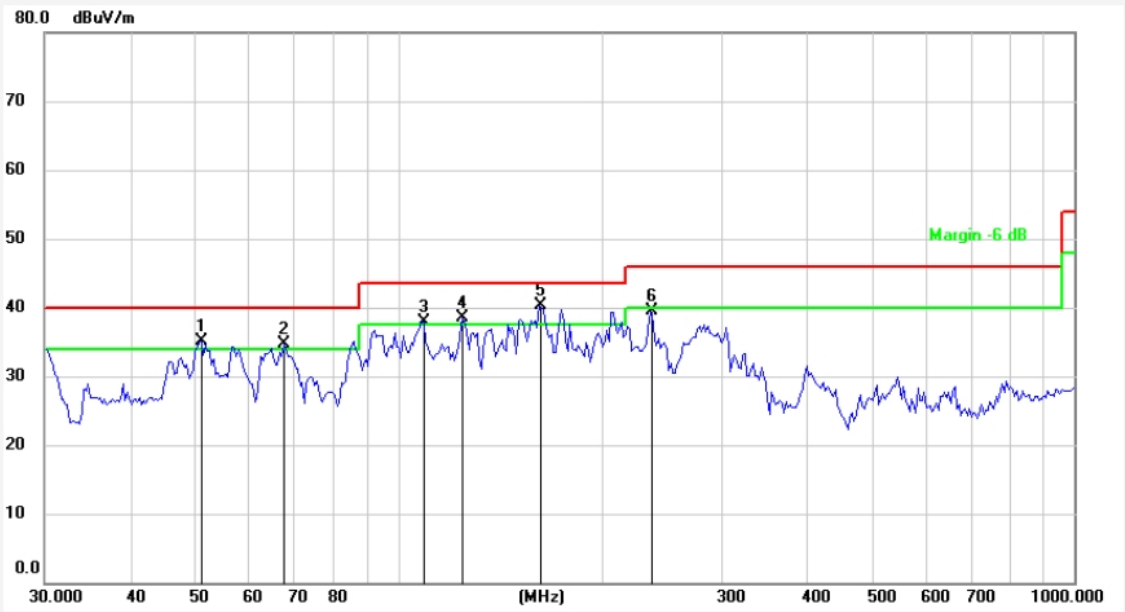

No.	Freq. (MHz)	Reading (dBuV)	Factor (dB/m)	Result (dBuV/m)	Limit (dBuV/m)	Over Limit (dB)	Detector	Remark
1	51.1208	48.96	-13.88	35.08	40.00	-4.92	QP	
2	67.6751	55.67	-20.97	34.70	40.00	-5.30	QP	
3	108.2667	56.23	-18.33	37.90	43.50	-5.60	QP	
4	124.5690	58.97	-20.42	38.55	43.50	-4.95	QP	
5	161.4742	60.20	-19.97	40.23	43.50	-3.27	QP	
6	235.8164	56.54	-17.02	39.52	46.00	-6.48	QP	

Shenzhen Anbotek Compliance Laboratory Limited
Address: Sogood Industrial Zone Laboratory & 1/F. of Building D, Sogood Science and Technology Park, Sanwei Community, Hangcheng Subdistrict, Bao'an District, Shenzhen, Guangdong, China
Tel:(86)0755-26066440 Email: service@anbotek.com
Hotline 400-003-0500
www.anbotek.com

5. 20dB Occupy Bandwidth Test

5.1. Test Standard and Limit

Test Standard	FCC Part15 C Section 15.215(c)
Test Limit	Intentional radiators operating under the alternative provisions to the general emission limits, as contained in §§ 15.217 through 15.257 and in subpart E of this part, must be designed to ensure that the 20 dB bandwidth of the emission, or whatever bandwidth may otherwise be specified in the specific rule section under which the equipment operates, is contained within the frequency band designated in the rule section under which the equipment is operated.

5.2. Test Setup

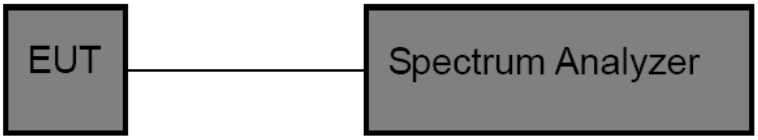

5.3. Test Procedure

The bandwidth of the fundamental frequency was measured by spectrum analyzer with RBW=1%-5%OBW, VBW≥3*RBW. The 20dB bandwidth is defined as the total spectrum the power of which is higher than peak power minus 20dB.

5.4. Test Data

Temperature:	25.7 °C	Humidity:	56 %	Atmospheric Pressure:	101 kPa

Freq.(Hz)	Bandwidth (Hz)	Results
125	814	PASS

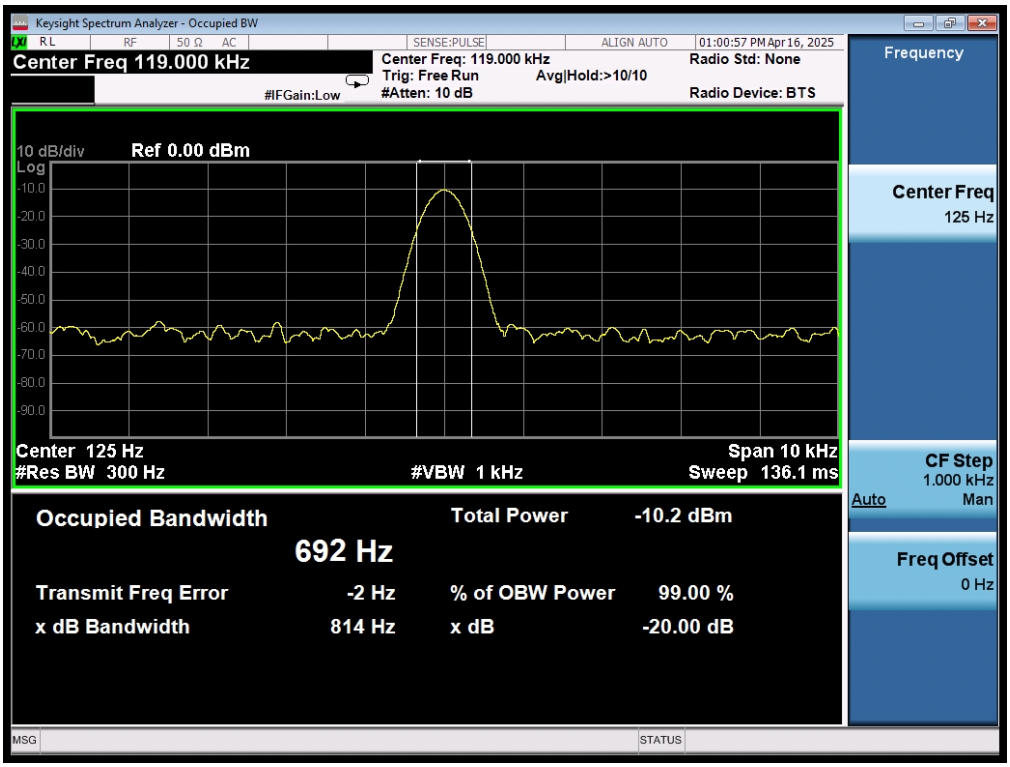

Note: The measured signal is Cw-like, adjusting the RBW per C63.10 would not be practical since measurement bandwidth will always follow the RBW. The RBW is set to 300 Hz to perfomm the occupied bandwidth test.

6. Antenna Requirement

6.1. Test Standard and Requirement

Test Standard	FCC Part15 Section 15.203
Requirement	1) 15.203 requirement: An intentional radiator shall be designed to ensure that no antenna other than that furnished by the responsible party shall be used with the device. The use of a permanently attached antenna or of an antenna that uses a unique coupling to the intentional radiator, the manufacturer may design the unit so that a broken antenna can be replaced by the user, but the use of a standard antenna jack or electrical connector is prohibited.

6.2. Antenna Connected Construction

The antenna is a Inductive loop coil Antenna which permanently attached. It complies with the standard requirement.

APPENDIX I -- TEST SETUP PHOTOGRAPH

Please refer to separated files Appendix I -- Test Setup Photograph_RF

APPENDIX II -- EXTERNAL PHOTOGRAPH

Please refer to separated files Appendix II -- External Photograph

APPENDIX III -- INTERNAL PHOTOGRAPH

Please refer to separated files Appendix III -- Internal Photograph

---------- End of Report ----------

Shenzhen Anbotek Compliance Laboratory Limited
Address: Sogood Industrial Zone Laboratory & 1/F. of Building D, Sogood Science and Technology Park, Sanwei Community, Hangcheng Subdistrict, Bao'an District, Shenzhen, Guangdong, China
Tel:(86)0755-26066440 Email: service@anbotek.com
Hotline 400-003-0500
www.anbotek.com