说明书制作要求
此页不印刷

客户文件编码				
NO.	版本号	修改日期	变更/修改内容(ECN)	修订/审核人
1				

印刷内容：YN-2400 / YN-2400Pro I说明书 美规
产品规格：51.52V, 40Ah/2060.8Wh
产品版本：

成品尺寸：142x210mm
展开尺寸：284x210mm
钉装：骑马钉 20P
材质：128g/157g 双铜纸

YN-2400

USER MANUAL

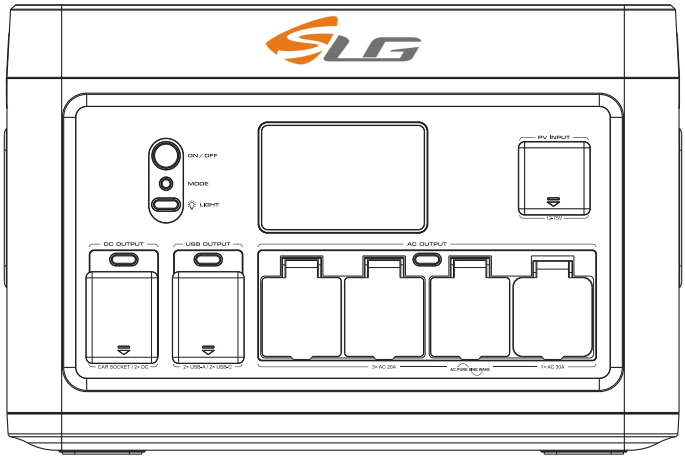

Thank you for purchasing YN-2400 Series high quality power station

To ensure your personal safety, Property safety and good user experience, Please read this User Manual carefully before operation and keep it for future reference.

⚠ Charging instructions

Before using your new Power Station YN-2400 Series, plug it into a suitable power outlet until it is fully charged. Then you can start your exciting journey with it.

⚠ WARNING

Please read the following instructions for safety before use. Improper use may result in fire, property damage or personal injury or death. DO NOT use the product with incompatible components or alter the product in any way.

⚠ WARNING

Improper use may result in fire, property damage, or personal injury. Make sure to use the product according to the following safety rules and guidelines.

⚠ WARNING

Do not expose the product to any liquid or submerge in water. If the battery comes into contact with water, it may cause chemical decomposition of the battery. This may cause the battery to catch fire or explode.

SAFETY INSTRUCTIONS

Read the following instructions to ensure safe usage:

⚠ DANGER

Noncompliance may very likely lead to serious injury*or death.

- DO NOT disassemble, repair or modify the unit or the battery.
- DO NOT place the unit close to or in a fire or expose it to heat. Keep out of direct sunlight.
- DO NOT charge, use or store the unit in a bathroom or in an area exposed to rain or moisture. Only use the output socket to power external devices.
- Never connect the output to mains power under any circumstances.
- DO NOT touch the unit or the plug in points if your hands are wet.
- DO NOT connect any metallic objects to the AC input or output.
- DO NOT rub your eyes if fluid from inside the unit should get in your eyes.
- DO NOT dispose the unit together with household waste.
- DO NOT use any inappropriate power cords.
- DO NOT operate the unit above the specified input voltage.
- DO NOT use the unit if it is not functioning correct.
- DO NOT move the unit if it is recharging or in use.

⚠ WARNING

Noncompliance may lead to serious injury** or death.

- Use and store the unit only in a clean and dry environment. Do not use and store in dusty and wet environment.
- Check the unit prior to every use. Do not use the unit if it is damaged, broken.
- DO not use the unit if the power cord is damaged or broken. Keep the unit away from children.
- DO NOT let children use the power supply unit. Keep this product away from pets.
- DO NOT use or store the unit in an area or environment with high temperature.
- Should fluid from inside of the unit come in contact with your skin or clothing, wash the affected areas with tap water. In a storm, unplug the power cord from the socket.
- DO NOT charge the device through a power system other than the rated voltage.
- DO NOT place the unit on its side or upside down while in use or storage.
- DO NOT use accessories for other usage.

⚠ CAUTION

Noncompliance may lead to injuries and/or property damage**

- If rust peculiar odors. overheating or other abnormal circumstances are observed, stop using the unit immediately and contact the dealer or our customer service center.
- The unit complies with all legal requirements for transport of dangerous goods.
- Make sure that the unit is properly secured when transporting it in a motor vehicle.
- Only charge, use and store the unit within an ambient temperature of 0 to 40°C (32 ~104 °F).
- Switch the unit off immediately if it has accidentally fallen, was dropped or was exposed to vibrations.
- Once the unit is fully charged, unplug the AC charging cable. We is not liable for any damage caused by using different brand charging cables.
- Use of different cables will void the products warranty and may cause damage or serious bodily injury.

Carefully read the instructions for the electric devices that you intend to connect to your power.

Product Maintenance:

1. Battery life may be reduced or become nonfunctional if not properly maintained.
2. Fully charge and discharge at least every 3 months to ensure battery life.
3. Do not store battery with less than 50% charge.

PRODUCT INTRODUCTION

YN-2400 Series with high capacity and high safety battery pack.

It is very convenient for emergency off-grid demand such as sudden power failure, snowstorm or hurricane, outdoor tourism, outdoor operation, RV power supply, etc. There is perfect performance with great power output up to 2400W, fast charging, high capacity and long cycle life.

Dual-machine parallel output 4800W Max, support more high-power equipment, more durable.

LOAD CAPACITY

Laptops (41.4Wh)
Around
42 Recharges

32" TV (60W)
Around
29 hours

CPAP without heated humidifier (15W)
116 hours

GoPro (5.9Wh)
Around
297 Recharges

Floodlight (5W)
Around
350 hours

Mini Fridge (40W)
Around
43 hours

DJ Drone (89.2Wh)
Around
19 Recharges

Smartphone (10Wh)
Around
175 Recharges

Switch (16Wh)
Around
109 Recharges

+MORE

PACKING LIST

Principal machine / User manual / AC charging cable / MC4 to Anderson cable (optional accessory) / Car charger to Anderson cable (optional accessory) / YN-2400Pro Parallel Cable (optional accessory).

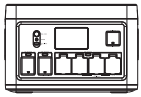

Principal machine

User Manual

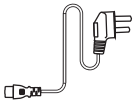

AC charging cable

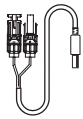

MC4-Anderson connector cable
(optional accessory)

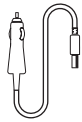

12V Car Anderson cable
(optional accessory)

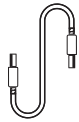

YN-2400Pro Parallel Cable
(optional accessory)

It is recommended to use 120W/200W/300W/400W/600W/800W Solar Panels.

CONTENTS

SAFETY INSTRUCTIONS 01

PRODUCT INTRODUCTION 02

LOAD CAPACITY 02

PACKING LIST 02

PRODUCT FUNCTION DESCRIPTION 04

BUTTON INDICATOR 05

LCD DISPLAY 06

LIST OF FAULT CODES 07

YN-2400PRO FULL PARALLEL INTEGRATION 07

CHARGING FUNCTION DESCRIPTION 08

OPERATING INSTRUCTIONS 10

TRANSPORT INSTRUCTIONS FOR DANGEROUS GOODS 12

TROUBLE SHOOTING 12

PRODUCT MAINTENANCE 12

FCC NOTE 13

YN-2400 TECHNICAL SPECIFICATIONS 14

YN-2400PRO TECHNICAL SPECIFICATIONS 15

WARRANTY 16

PRODUCT FUNCTION DESCRIPTION

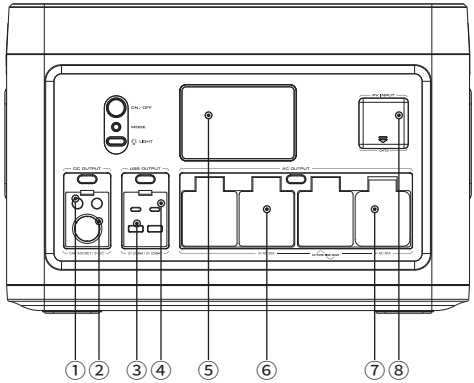

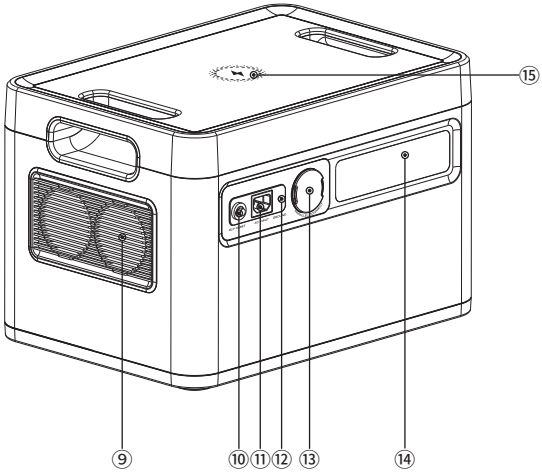

① DC Output
② Cigarette Lighter Socket Output
③ USB-A Output
④ USB-C Output
⑤ LCD Screen Display
⑥ AC Output 20A ×3
⑦AC Output 30A ×1 (YN-2400Pro)
⑧ PV Input
⑨ Air Intake Vent with Cooling Fan
⑩ OLP Reset
⑪ AC Input
⑫ Grounding Port
⑬AC Parallel Interface (YN-2400Pro)
⑭ LED Light
⑮ Wireless Charge

Reminder: If the battery with low power, please charges it before use.

BUTTON INDICATOR

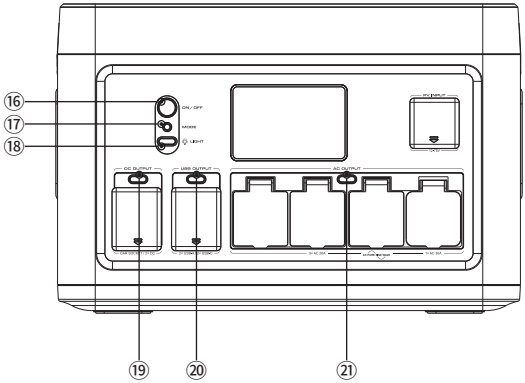

Wireless Charge ⑮

Press "Power ON/OFF" Button to turn on the Wireless Charge.

Press "Power ON/OFF" Button to shut down the output(s) when not in use.

Button ⑯ Power ON/OFF

Press button ⑯ to turn on or turn off the equipment.

Button ⑰ MODE

The default fast charging mode is switched on, and the power will switch to slow charging power mode by pressed button. The slow charge is charged at one quarter of the maximum allowable power.

Button ⑱ LED Light

Function is available no matter the button "Power ON/OFF" is activated or not as the following steps: press button B to turn on the LED light into the LED light mode. Thirdly, press button B back to LED light mode, then press it again, the light will be turn off.

Button ⑲ DC Output

Before press button ⑲ to turn on, please make sure the "Power ON/OFF" is ON first.

To stop Output, press ⑲ again.

Button ⑳ USB Output

Before press button ⑳ to turn on, please make sure the "Power ON/OFF" is ON first.

To stop Output, press ⑳ again.

Note: Different Devices with different USB-C cable agreement. If USB-C port not working, please confirm whether the product has electricity.

Button ㉑ AC Output

Before press button ㉑ to turn on, please make sure the "Power ON/OFF" is ON first.

To stop Output, press ㉑ again.

LCD DISPLAY

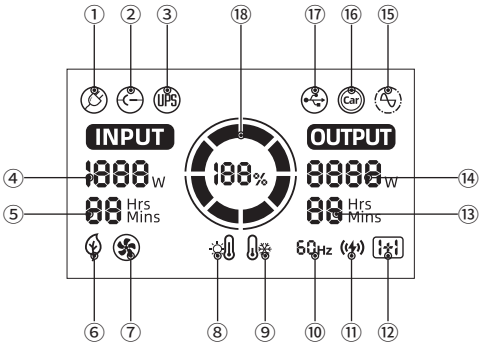

① **AC Input:** When the AC charging cable is inserted, this label is displayed on the LCD.

② **DC Input:** When the DC DC/SOLAR PV charging cable is inserted, this label is displayed on the LCD.

③ **UPS Mode:** When the device is in the AC charging state and the AC output is turned on, the UPS mode automatically starts and this label is displayed on the LCD.

④ **Input Power:** When charging, the display displays "INPUT" and charging power.

⑤ **Input Time:** When charging, the display shows full remaining time.

⑥ **Quick Charge Switching:** When the AC charging mode is used, the label is displayed when the charging mode is switched to slow charge.

⑦ **Fan Start Cooling Status:** When the fan is running, this label is displayed on the LCD.

⑧ **High Temperature Alarm:** When the inverter or battery pack temperature is too high, this label is displayed on the LCD.

⑨ **Low Temperature Alarm:** When the temperature of the inverter or battery pack is too low, this label is displayed on the LCD.

⑩ **AC Output Frequency:** When the AC switch is turned on, the display displays "OUTPUT" and the icon.

⑪ **Wireless Charge:** When the wireless charge output, this label is displayed on the LCD.

⑫**AC Parallel State (YN-2400Pro):** When the AC output is synchronized, this identifier is displayed on the LCD.

⑬ **Output Time:** In the output state, the screen displays the remaining output time.

⑭ **Output Power:** Displays the total used power of DC output, USB-A, USB-C, and AC output.

Note that this value can be adjusted multiple times as the energy consumption of the connected device changes. This is evident when the port is initially activated using a connected device.

⑮ **AC Outputs:** After the AC output switch is turned on, the icon lights up and displays the total ac output power, current remaining time, and current frequency.

⑯ **Cigarette Lighter Socket Output:** When the Cigarette Lighter Socket Output is turned on, the icon lights up and shows the total power used by the DC output, the current remaining time and frequency.

⑰ **USB Output:** When the USB output is turned on, the icon lights up and shows the total power used by the DC output, the current remaining time and frequency.

⑱ **Battery Level Indicator:** Displays the current battery level in the form of energy circle + percentage. The main switch is turned on and the battery quantity is displayed. During the charging process, the energy circle is displayed dynamically.

LIST OF FAULT CODES

Fault code	Significance	solutions
E01	Battery overvoltage	Please disconnect the charging cable and stop charging
E02	Battery undervoltage	Please disconnect the output and charge the device
E03	Inverter overheating	Please disconnect the output and wait 1-2 hours before operation
E04	Abnormal input voltage	Please disconnect the charging cable
E05	Abnormal grid frequency	Please disconnect the charging cable
E06	Output voltage anomaly	Please contact customer service center
E07	AC and USB outputs are overloaded or short-circuited	Please disconnect the output and check the electrical equipment
E08	DC output is overloaded or short-circuited	Please disconnect output
E09	Inverter failure	Please contact customer service center
E16	Charge overload	Please disconnect the output load

NOTE: When the DC load is abnormal, the system will automatically turn off the output and will not show the fault code. Please disconnect the output and check the electrical equipment then try again. When the USB load is abnormal, the corresponding output power will to be zero and the system will not show the fault code. Please disconnect the outputs and check the electrical equipment, then try again.

YN-2400PRO FULL PARALLEL INTEGRATION

Double your power right of the box. No complicated or costly junction boxes - simple plug and play technology allows you to link two, YN-2400Pro's together easily. Parallel cable included!

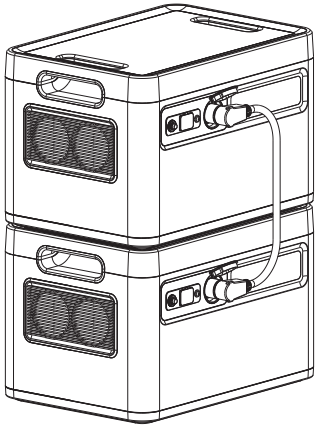

Step 1: turn off two AC outputs and then insert the paralleling line.

Step 2: turn on both of the AC ON/OFF of two YN-2400Pro.

Step 3: insert and start the loaded equipment.

This feature is only available for YN-2400Pro, Requires second YN-2400Pro's sold separately.

CHARGING FUNCTION DESCRIPTION

Re-charging time

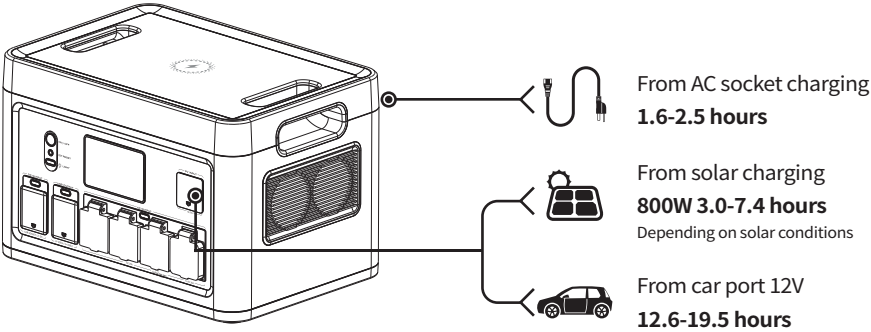

AC charging

Use the AC charging cable we provided to charge the device. It takes 1.6 to 2.5 hours to full capacity. When LCD showing battery power reached 100%,it means that battery has been full charged and input power will turn off in minutes.

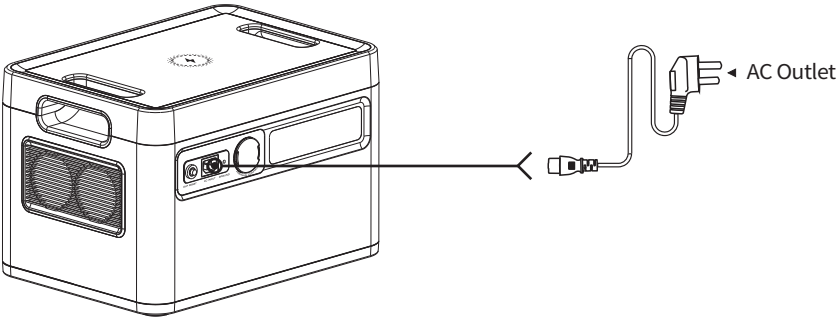

When the device is charging, if the AC input current is more than 20A, the device will be overloaded, a fault code "E16" will be showed on the LCD, the output will be shut off after 10 seconds. Please disconnect the output load then press the AC switch once to clear it.

12V car charger

Use the car charger we provided to charge. It takes 12.6 to 19.5 hours to fully charge. When the LCD shows that the battery power is 100%, it means that the battery is fully charged.

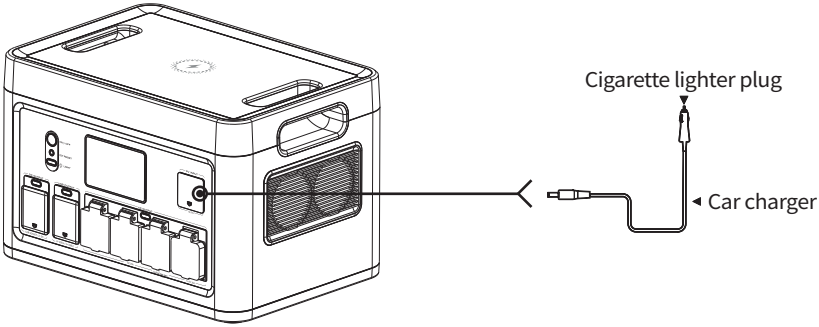

Caution: Do not charge the product with solar PV input and car port at the same time!

Solar panel charging

The total open circuit voltage of solar modules after series-parallel connection should not exceed the specified voltage!

Please place as many solar panels in direct sunlight as possible. Support 120W/200W/300W/400W/600W/800W solar panel charging, the charging time is determined by the sunlight intensity.

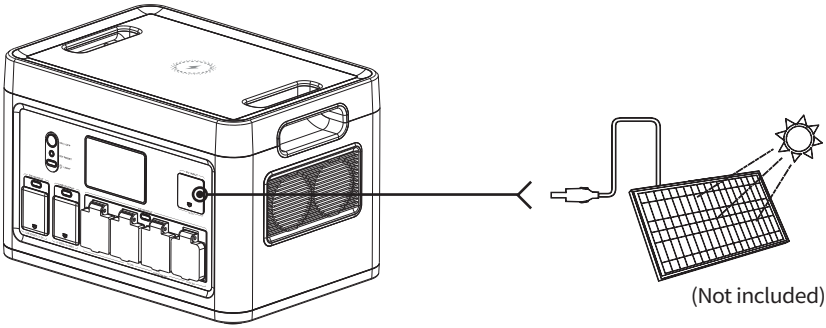

Re-charging

Use the original AC line to charge, the full charge time is about 1.6-2.5 hours. When charging, the LCD screen will be lit, the LCD display will provide real-time display data of battery charging, and the device will display 100% when it is fully charged. It is recommended to fully charge the device every 3 months to maintain the life of the device.

Power output attention

Press output switch to select the desired outlet type. The output port must press the corresponding button to activate the port. When activated, the LCD display will turn on and provide detailed information about the charging output. When no output is activated, the LCD screen will automatically turn off.

Overload condition

If the AC and USB outputs are overloaded or short-circuited, the device will automatically turn off the output power. The code "E07" will be displayed on the LCD screen.

If the DC output is overloaded or short-circuited, the device will automatically turn off the output power. The code "E08" will be displayed on the LCD screen.

Discharging

Press the "Power on/off" button for 1 seconds to turn on the device. Press the "Power on/off" button for 3 seconds to turn off the device. The device uses an advanced battery management system that allows it to charge the connected device through AC or DC output or USB output.

How to switch frequency?

The device can intelligently identify the frequency of voltage when charging, and can automatically set the frequency, so please charge before using. After plugging in the charging cable, the display will show the frequency of current grid voltage if it displays "50", it is 50Hz, if it displays "60", it is 60Hz.

You can also manually set and change the voltage frequency. Before using the power station, please confirm the voltage frequency of your electrical equipment, 50 Hz or 60 Hz?

Then press the "Power on/off" button for 1 seconds to turn on the device. If "50" is displayed on the LCD, it means that the operating frequency of the power station is 50 Hz. If' 60' is displayed on the LCD screen, it means 60 Hz.

If the frequency displayed on the LCD display does not match the frequency of the local power grid, you must change the frequency according to the following steps:

Step 1: press the button 'Power on/off' for 3 seconds to power off (the LCD display screen will turn off).

Step 1: keep pressing the button 'AC on /off' with your right finger first and then press the button 'Power on/off' for 1 seconds with your left finger, then release the both fingers off the buttons. You will see the frequency.

Cooling fan

The equipment is designed with an internal cooling fan to ensure that the product runs within the proper temperature range. When the device experiences a high output load, it will automatically turn on the fan. During discharging and charging, the fan may run intermittently to keep the internal temperature within the operating range. When the AC circuit is activated, the fan is likely to start to ensure normal operation.

Power saving sleep mode

① No charging (AC input + PV), no discharging (DC + USB + AC). When charging is not connected and only the main switch is turned on: sleep after 5 minutes.

② Any charging is connected (regardless of whether there is power), and it does not sleep.

③ USB <5W, DC <5W, AC <25W, three conditions are met at the same time, and sleep after a delay of 8 hours.

④ The self-consumption of whole machine is less than 5mA after shutting down all switch and sleeping;

⑤ Please turn off the main power switch during transportation or it will not be used for a long time. Self-consumption after switching off is less than or equal to 200μA.

Equipment cleaning

Please make sure that the device is disconnected from all input power and output devices. Wipe with a clean, dry, non-soft cotton cloth. Remove all any foreign objects, dirt or other obstructions on the vents on both sides. While cleaning foreign objects in the side vents, do not allow debris, dirt or other blockage to enters the equipment.

Do not use corrosive cleaners or solvents.

Do not use compressed air to clean the side cooling vents, as it will cause foreign particles to enter the interior and cause a short circuit.

Note: To avoid the risk of electric shock, do not use metal objects to clean the ports.

Storage

If it will be stored for more than 1 month, please charge it to 50% capacity and keep it indoors, at normal temperature, and the maximum storage time shall not exceed 6 months. Please keep it away from direct sunlight.

Excessive temperature will lead to reduced service life, overheating and fire. Extremely cold conditions below the specified storage range can also impair the performance and service life of the equipment. Please keep away from corrosive chemicals and gases.

After taking it out of storage, perform a visual inspection to ensure that the appearance of the equipment and all accessories are qualified. Check the vents on the intake and exhaust sides to make sure they are free of foreign objects.

TRANSPORT INSTRUCTIONS FOR DANGEROUS GOODS

Not permitted on aircrafts	Avoid dropping
To preserve the battery lifespans, please use and recharge at least once every 3 months	Do not disassemble
Use an original or certified charger or cable	It's not waterproof, do not expose to liquids
Avoid extreme temperature	Please dispose of batteries and electronic goods in accordance with local regulations

The YN-2400 Series power station meets all legal requirements for the transportation of dangerous goods. The capacity of the lithium battery pack exceeds 100Wh. According to international standards, if the power station is transported by air, it must be transported in accordance with IATA standard packaging. The instructions and labeling requirements of the International Air Transport Association and related declarations must be completed.

TROUBLE SHOOTING

The device does not discharge

① Check whether the connecting wire has been inserted in right place;

② Check whether the total output power exceeds the rated output power;

③ Check whether the temperature of the equipment is too high.

The device is not charging

① Confirm that the AC socket on the wall and the AC charging cable are fully inserted into the AC input terminal;

② The device cannot be charged immediately after it is discharged. Please put it aside for an hour and try again, because it may enter the over-temperature protection.

PRODUCT MAINTENANCE

Maintenance

Check as needed. If the YN-2400 Series power station cannot working regularly, please charge and discharge it every 3 months under normal temperature to keep the service life. Regularly check all ports and wall chargers for any debris, dirt, damage, and corrosion.

Do not disassemble the device privately.

Do not cover the equipment with towels, clothes or other items. Regularly observe the side vents for dust and foreign matter, and clean them according to the cleaning procedures specified in the manual.

Disposal/recycling

Do not put the device and its accessories in the trash can. Items must be properly handled in accordance with local laws and regulations. For additional information, please see www.epa.gov.

Affirm

Copyrighted equipment. We all rights reserved. All trademarks cited here are the property of their respective owners. The information contained in this agreement is subject to change without notice. The we is not responsible for technical or editorial errors or omissions contained in this agreement. First Edition: January 2023

FCC NOTE

Any changes or modifications not expressly approved by the party responsible for compliance could void the user's authority to operate the equipment.

NOTE: This equipment has been tested and found to comply with the limits for a Class B digital device, pursuant to Part 15 of the FCC Rules. These limits are designed to provide reasonable protection against harmful interference in a residential installation. This equipment generates, uses and can radiate radio frequency energy and, if not installed and used in accordance with the instructions, may cause harmful interference to radio communications. However, there is no guarantee that interference will not occur in a particular installation.

If this equipment does cause harmful interference to radio or television reception, which can be determined by turning the equipment off and on, the user is encouraged to try to correct the interference by one or more of the following measures:

- Reorient or relocate the receiving antenna.
- Increase the separation between the equipment and receiver.
- Connect the equipment into an outlet on a circuit different from that to which the receiver is connected.
- Consult the dealer or an experienced radio/TV technician for help.

The device has been evaluated to meet general RF exposu rerequirement.

The device can be used in portable exposure condition without restriction.

FCC ID: 2BCSHYN2400MV1000

YN-2400 TECHNICAL SPECIFICATIONS

GENERAL PARAMETERS	
Battery Type	Lithium Iron Phosphate
Rated Capacity	51.52V, 40Ah/2060.8Wh
Net Weight	≈ 26kg
Product Size	430mm*300mm*287mm
Operating Temp	14 to 104 °F (-10 to 40°C)
Charging Temp	32 to 104 °F (0 to 40°C)
Storage Temp	-4 to 113° F (-20 to 45° C)

INPUT	
AC Charge Input Voltage	AC 100V-130V~12.5A, 60Hz
AC Charge Input Power	AC 1500W
Solar Charge Input	DC 12V-75V, 800W Max
Car Charger	DC 12V/24V, 192W Max

OUTPUT	
AC Output Voltage*4	120V~60Hz
Rated Output Power	2400W
Output Waveform	Pure Sine Wave
UPS Switching Time	10ms
Cigarette Lighter Socket Output	12V⎓10A
DC Output*2	12V⎓3A (Each)
USB-A Output*2	5V⎓3A, 9V⎓2A, 12V⎓1.5A, 18W Max
USB-C Output*2	5V/9V/12V/15V/20V⎓3A, 20V⎓5A, 100W Max
Wireless Charge	10W
LED Light	5W

YN-2400PRO TECHNICAL SPECIFICATIONS

GENERAL PARAMETERS	
Battery Type	Lithium Iron Phosphate
Rated Capacity	51.52V, 40Ah/2060.8Wh
Net Weight	≈ 26kg
Product Size	430mm*300mm*287mm
Operating Temp	14 to 104 °F (-10 to 40°C)
Charging Temp	32 to 104 °F (0 to 40°C)
Storage Temp	-4 to 113° F (-20 to 45° C)

INPUT	
AC Charge Input Voltage	AC 100V-130V~12.5A, 60Hz
AC Charge Input Power	AC 1500W
Solar Charge Input	DC 12V-75V, 800W Max
Car Charger	DC 12V/24V, 192W Max

OUTPUT	
AC Output Voltage*4	120V~60Hz
Rated Output Power	2400W
After Being Connected AC Output	4800W
Output Waveform	Pure Sine Wave
UPS Switching Time	10ms
Cigarette Lighter Socket Output	12V⎓10A
DC Output*2	12V⎓3A (Each)
USB-A Output*2	5V⎓3A, 9V⎓2A, 12V⎓1.5A, 18W Max
USB-C Output*2	5V/9V/12V/15V/20V⎓3A, 20V⎓5A, 100W Max
Wireless Charge	10W
LED Light	5W

WARRANTY

We assure the original purchaser that our products are free of defects in workmanship and materials during the applicable warranty period determined in the "Warranty Period" section below, but the exclusions set below is excluded.

This warranty statement sets total and exclusive obligations of us. We will not assume, nor authorize any person to assume for us any other liability related to the sale of our products.

Warranty

The warranty is 12 months, and the warranty period is calculated by the original consumer purchaser from the date of purchase. In order to determine the start date of the warranty period, a sales receipt from the first consumer purchase or other reasonable documentary proof is required.

Repair processing

We will repair or replace any products that cannot be operated due to defects in workmanship or materials within the applicable warranty period. If a valid claim is filed within the applicable period, we can choose:

(1) Replacement product.

(2) It can be exchanged with products of equal value. The replacement product bears the remaining warranty period of the original product or replaces it (90) days from the date of warranty, whichever is greater. The customer is responsible for the shipping cost of the return.

Exclusions

The warranty of YN-2400 Series does not apply to 1) any product that is modified, misused, abused, damaged by accident, or used for anything other than normal consumer use as authorized in current product literature or 2) any product purchased through an online auction house. The warranty of YN-2400 Series does not apply to the battery cell unless the battery cell is fully charged by you within seven days after your purchase the product and at least every 6 months thereafter.

After-sales service

For after-sales maintenance service, please contact our customer service team.

Due to constant technology update, product specifications and configuration changes, please refer to the actual product.

FCC Warning

This device complies with part 15 of the FCC Rules. Operation is subject to the following two conditions:
(1) This device may not cause harmful interference, and (2) this device must accept any interference
received, including interference that may cause undesired operation.
Any Changes or modifications not expressly approved by the party responsible for compliance could
void the user's authority to operate the equipment. Note: This equipment has been tested and found to comply with the limits for a Class B digital device, pursuant to part 15 of the FCC Rules. These limits are designed to provide reasonable protection
against harmful interference in a residential installation. This equipment generates uses and can radiate
radio frequency energy and, if not installed and used in accordance with the instructions, may cause
harmful interference to radio communications. However, there is no guarantee that interference will not
occur in a particular installation. If this equipment does cause harmful interference to radio or television
reception, which can be determined by turning the equipment off and on, the user is encouraged to try to
correct the interference by one or more of the following measures: -Reorient or relocate the receiving antenna. -Increase the separation between the equipment and receiver. -Connect the equipment into an outlet on a circuit different from that to which the receiver is connected. -Consult the dealer or an experienced radio/TV technician for help. This equipment complies with FCC radiation exposure limits set forth for an uncontrolled environment. This equipment should be installed and operated with minimum distance 20cm between the radiator &
your body.