3WWDZ-50B
Agriculture Drone

User Manual V0.2

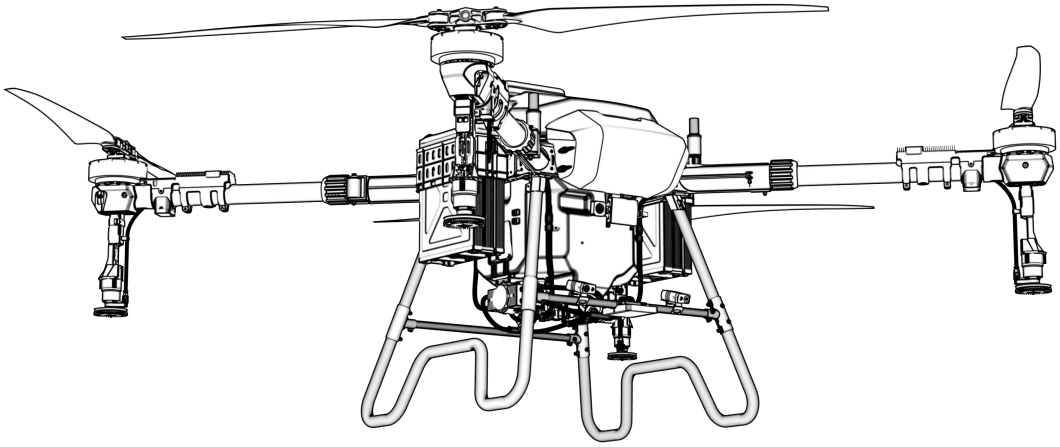

Topxgun (Nanjing) Robotics Co., Ltd.
2023.11

Usage Recommendation

Topxgun provides user with the following documents:

1. Packing List
2. 3WWDZ-50B Agriculture Drone User Manual
3. Agriculture Assistant APP User Manual

For detailed usage and functions, please refer to “3WWDZ-50B Agriculture Drone User Manual" and "Agriculture Assistant APP User Manual”. You can also follow us on YouTube Channel for tutorials and tips in the operation.
* To keep you updated, some documents may be taken as E-documents.

Agriculture Assistant APP

Topxgun Official Website

Preface

The 3WWDZ-50B agricultural drone is a mature multi-rotor UAV, leading the industry in terms of function, appearance, control, safety and other aspects. There are certain usage risks of multi-rotor drones due to the mechanism and structure. Please strictly follow the safety tips and user manual during the operation. Improper use of this product may result in direct or indirect losses and injuries.

Disclaimer

Please read the manual carefully before using the aircraft. Once the drone is used, it is deemed to be an acknowledgement and acceptance of all the content of this user manual. This drone is suitable for people 18 years of age and older. Topxgun is not responsible for the loss of personal or property due to the following problems:

1. The user does not assemble or use the drone as required by this manual.
2. The user operates the drone in poor physical or mental conditions such as drinking, drug abuse, fatigue, etc.
3. The user actively or intentionally operates the drone to create damage.
4. The user modifies the drone without using the accessories from Topxgun, which causes malfunction of the drone.
5. Injury caused by the user's misoperation or subjective misjudgment.
6. Damage caused by natural causes, such as aging of the circuit and so on that affects the aircraft.
7. Damage caused by the user’s operation of the drone while knowing that it is in an abnormal working condition.
8. The user still operates the drone under severe weather conditions such as typhoons, hail and fog.
9. The user operates the drone in the magnetic interference area, radio interference area and government no-fly area.
10. The user operates the drone in case of poor visibility and occlusion of the line of sight.
11. The user operates the drone to cause the infringements by obtaining any data, image data and other infringement behaviors.
12. Other losses that are not within the scope of the company’s liability.

©2023 Topxgun (Nanjing) Robotics Co., Ltd. All Rights Reserved

Safety Operation Instructions

1. Pesticide Usage

- Wear protective clothing to prevent direct body contact with the pesticide while operating.
- Avoid the use of powder pesticides as much as possible or else they may reduce the service life of the spraying system.
- Use clean water to prepare the pesticide to avoid blocking the strainer. Do not remove any filter and clear any blockages before using the equipment.
- After using the pesticide, please clean up the residual liquid in time. It is strictly forbidden to pollute the river and drinking water source and ensure that it will not cause harm or impact on people, animals and the environment in the surroundings.
- The effect of the pesticide is closely related to the concentration of the pesticide, the spraying rate, the altitude of the drone from crops, the wind direction, the wind speed, etc. The above factors should be taken into account comprehensively when using the pesticide in order to achieve the best effect.
- Strictly follow the safety instructions of the pesticide production company.
- Particular working fluids are prohibited.
- During operations, pay attention to factors such as wind direction and pesticide toxicity, to prevent pesticide damage to adjacent plots due to mist drift.

2. Usage Environment

- Always fly in an open space, away from the crowd.
- It is recommended to fly below 2000 meters.
- It should fly in an environment with a temperature between 0°C and 40°C.
- It is recommended to fly in an environment with a wind speed below level 4.
- It is strictly forbidden to fly in rain, fog, snow or other extreme weather.
- It is strictly forbidden to fly indoors.
- It must fly in a legal area. Before flying in the legal area, please consult your local flight management department to comply with local laws and regulations.

3. Pre-flight Inspection

- Make sure that every device is fully charged.
- Make sure that all parts are in good condition. If there are some parts worn or damaged, please replace them before the flight. Make sure that the landing gear and the tank are tightly mounted and all the screws are firmly tightened.
- Make sure that the propellers are intact and firmly mounted, the propellers and arms are fully extended, and the screws are tightened.
- Make sure the motors are clean and free of damage.
- Make sure the spraying system is free of blockage and works properly.
- Please calibrate the compass before the flight.

4. Operation

- Keep away from the rotating propellers and motors.
- When folding the drone, avoid crushing and damaging the drone parts.
- Do not exceed the take-off weight of 104.7 Kg to avoid danger.

©2023 Topxgun (Nanjing) Robotics Co., Ltd. All Rights Reserved

- Pilots must be professionally trained and pass the assessment, and the untrained personnel must not fly the drone.
- Make sure that the propellers are removed before calibrating the drone and upgrading the firmware.
- When the drone and the remote controller are in the frequency-connecting process, make sure that the propellers are removed and that people and animals are far away from the motor.
- A pilot should not operate this product under the influence of alcohol, fatigue, illness, etc.
- If the operating environment does not meet the working condition of the module, the drone will not avoid obstacles when it returns automatically. If the remote-control signal is normal, the flight speed and altitude can be controlled using the remote controller.
- When working, be sure to turn on the remote controller first, and then turn on the power supply. After landing, turn off the power supply first and then turn off the remote controller.
- Please maintain control of the drone throughout the process and do not rely entirely on the information provided by the hand-held ground station(remote controller).
- Obstacle avoidance and terrain following functions will not be available in the specific flight mode or environment. Please observe the attitude of the drone at all times and judge the flight condition reasonably to avoid obstacles in time.

5. Flight Restrictions and Local Laws

- Browse the official website of the Aviation Authority of your location for the latest list of restricted flight areas.
- The maximum control flight altitude is 30 meters in China. Regulations may differ in each country, please consult the local flight management department before taking off, to comply with local laws and regulations.

Special precautions: Safety operating instruction notes include but are not limited to the above items.

Intellectual Property Rights

The intellectual property rights of this product and its manual belong to Topxgun Robotics Co., Ltd. Without written permission, any organization or individual may not copy, reproduce or distribute them in any form. If the quotation is required, the source should be indicated and the manual should not be modified, deleted or quoted contrary to its original intention.

©2023 Topxgun (Nanjing) Robotics Co., Ltd. All Rights Reserved

About This Manual

This manual is used as a user's guide. Photos, graphics, charts and illustrations in the manual are only for explanatory and illustrative purposes and may differ from the actual product. Please refer to the actual product.

Due to product upgrades or other reasons, the content of this document will be updated from time to time. Unless otherwise agreed, it is without further notice. Before using this product, please read this manual carefully.

Execution standard of this product: Q/TG_002-2023

All rights reserved by **Topxgun (Nanjing) Robotics Co., Ltd.**

Content

1. Product Overview 6
1.1. Remote Control 6
1.2. Smart Battery Introduction 14
1.3. Charger Introduction (TC9002P) 17
1.4. Spreading System (Optional) 23
1.5. Drone Introduction 30
2. Flight 36
2.1. Flight Instructions 36
2.2. Indicator Description 38
2.3. Operation Description 39
2.4. Function Introduction 44
3. Maintenance and Common Troubleshooting 51
3.1. RC Maintenance & Precaution 51
3.2. Drone Maintenance & Precaution 51
3.3. Motor Maintenance & Precaution 51
3.4. Propeller Maintenance & Precaution 51
3.5. Battery Maintenance & Precaution 52
3.6. Plug Maintenance & Considerations 54
3.7. Spray System Maintenance & Considerations 54
4. Transportation Instructions 54
5. Hazards and Safety Checklist and Countermeasures 55
6. Manufacturer Information 56
7. Appendix 56
7.1. Specification Parameters 56

©2023 Topxgun (Nanjing) Robotics Co., Ltd. All Rights Reserved

1. Product Overview

The agricultural drone 3WWDZ-50B has undergone several iterations of upgrades, and now reaches the leading level in practicability, reliability and safety. The drone is full-body waterproof, dust-proof and anti-corrosion. Some key modules, such as spraying system, system and power system, are IP67 rated ensuring easy cleaning and maintenance. The GNSS+RTK positioning system can achieve centimeter-level high precision positioning, and also supports dual antenna anti-magnetic interference direction-finding technology. The drone is equipped with wide-angle FPV camera and high-definition digital image transmission system. Users can observe the environment in real time.

1.1. Remote Control

1.1.1. Component Definition

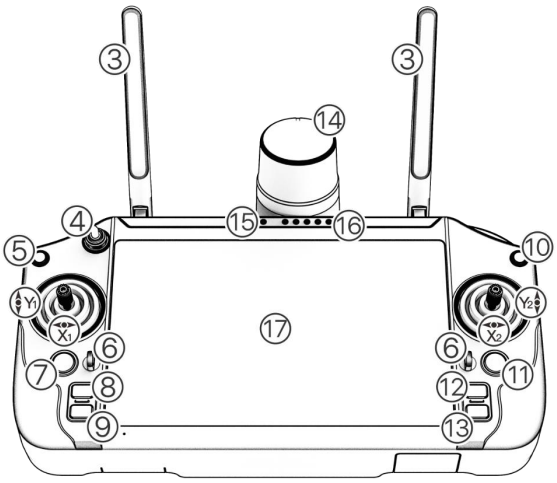

Figure 1-1

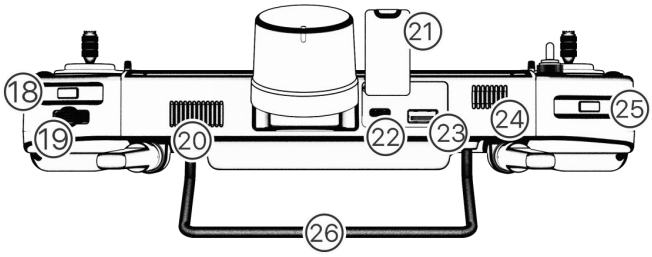

Figure 1-2

©2023 Topxgun (Nanjing) Robotics Co., Ltd. All Rights Reserved

Figure 1-3

The Main Control Buttons of the Remote Control (Mode 2)			
Serial No.	Corresponding Name	Corresponding Function	Function Description
Y1	Throttle	Left stick - up and down	The drone moves vertically (up and down)
X1	Yaw	Left stick - left and right	The drone rotates (left and right)
X2	Roll	Right stick - left and right	Fly left and right
Y2	Pitch	Right stick - up and down	Fly forward and backward
3	Remote Control Antenna	Primary and auxiliary antenna	Transit the control signal, telemetry signal, telegraphic signal
4	Switch Mode Button	Toggle the switch	Switch between GPS mode and Operation mode (Turn off by default, you can turn on in Setting)
5	Return Button	Return to the previous section	Return to the previous section in the Agriculture Assistant APP
6	Hanging Holes		For lanyard attachment
7	RTH (Return-to-home) Button	Long press for 2s, the drone will return home	Long press the RTH button to activate the smart return mode
8	L1 Button	Customizable Button	Default to rudder switch button
9	L2 Button	Customizable Button	Default to obstacle avoidance switch button

©2023 Topxgun (Nanjing) Robotics Co., Ltd. All Rights Reserved

10	Emergency Stop	Long press for 5s to lock the drone	Press for 5s to lock the drone in case of emergency
11	Power Button	Long press for 3s to turn on/off the RC	Long press to turn the RC on/off. When the RC is on, a short press can be used to turn the screen on/off
12	R1 Button	Functional button in APP	Adapt to the function buttons on the lower right corner of the APP (for example, continue operation, end operation, previous step, next step, etc.)
13	R2 Button	Functional button in APP	Adapt to the function buttons on the lower right corner of the APP (for example, continue operation, end operation, previous step, next step, etc.)
14	RTK Point Marker	Mark the point with RC	High-precision RTK point marking
15	Status Indicator	Remote control status indication	Refer to the “Indicator Status” chapter
16	Battery Level Indicator	Remote control battery level	Indicate the power level of the remote control
17	HD Touchable Display Screen	For interface display and touch selection	Operate the drone and display the drone status
18	FPV Switch Button	Switch between the FPV camera and the full-screen map	
19	Centering wheel	Toggle the corresponding signal output of regulation	Supported only for industry applications
20	Air Outlet	Remote control air outlet	Do not cover the air outlet of the RC when using
21	Sealing Cover	Protect RC interface	
22	Type-C Interface	Remote control charging and upgrading interface	Please use the specified charger
23	USB Interface	For external USB devices	
24	Heat dissipation Outlet	Remote control heat dissipation outlet	Do not cover it when using
25	Spray Button	Turn on/off the pump	Turn on/off the pump in the manual mode
26	RC Handle	Convenient for users to hold and carry	
27	Customizable Button	Record the Point B in AB Point Mode by default; Change to the right line by default in the Manual+ Mode	Customizable

©2023 Topxgun (Nanjing) Robotics Co., Ltd. All Rights Reserved

28	Customizable Button	Record the Point A in AB Point Mode by default; Change to the left line by default in the Manual+ Mode	Customizable
29	Wireless Network Card Slot	For installing an external wireless network card	
30	Wireless Network Card Cover	Protect the wireless network card	

1.1.2. Antenna Placement

The antenna of the RC adopts a foldable design, and the signal strength varies with the positions of the antenna. It is recommended to keep the antenna vertical to the ground when you control the drone. In this case, the signal is the strongest. The position or distance between the RC and the drone is adjusted in time to ensure that the drone is always in the optimal communication range. Therefore, the antenna of the RC should not point to the drone during the flight. The recommended operation is shown in Figure 1-4.

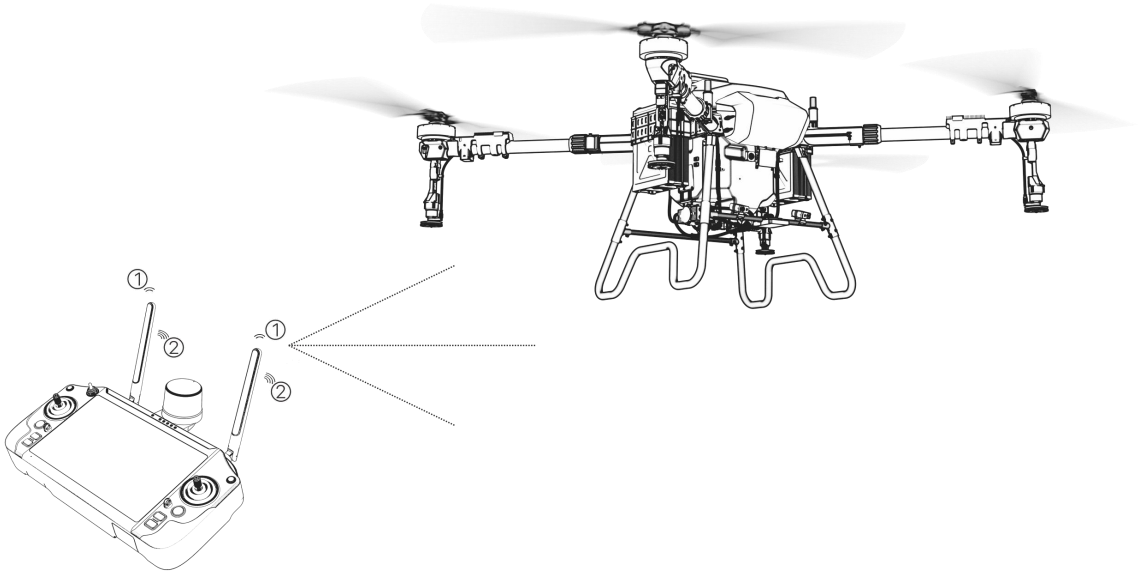

Figure 1-4 Signal Strength of the RC
1. Weak signal 2. Strong signal

Notes:
Do not fold the antenna during the flight to avoid obstruction between the RC and the drone, otherwise, the signal quality will be seriously reduced.

©2023 Topxgun (Nanjing) Robotics Co., Ltd. All Rights Reserved

1.1.3. Indicator Status

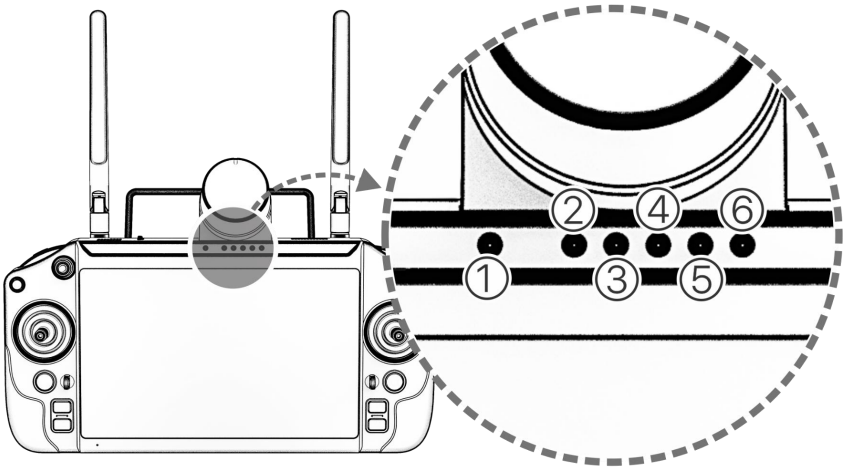

Figure 1-5 Indicator Status

The RC status indicator shows the status of the RC. The indicator will give priority to link status and warning messages.

Details are shown in the table below:

Indicator Status	RC Status	On/Off Status
Solid Red	RC is not connected to the drone	ON
Solid Green	RC is connected to the drone properly	ON
Cyan Flash	RC is pairing	ON
Green Flash	RC temperature is too high	ON
Red Flash	RC battery is low	ON
Blue Flash	The control stick is not in the middle position	ON
Solid Red	Charging and the battery level is less than 10%	OFF
Solid Yellow	Charging and the battery level is between 10% and 90%	OFF
Solid Green	Charging and the battery level is over 90%	OFF

©2023 Topxgun (Nanjing) Robotics Co., Ltd. All Rights Reserved

1.1.4. Remote Control Charging

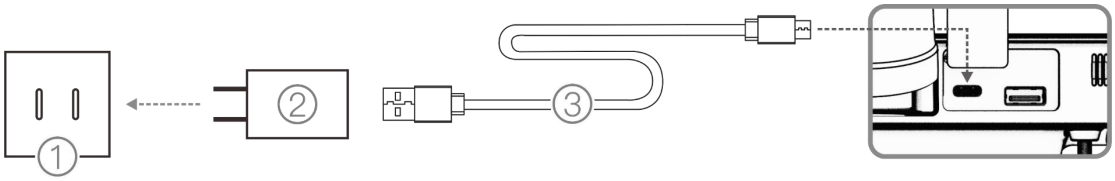

Figure 1-6

1. AC power supply 100-240V 2. USB charger 3. USB-C cable

Attention please:

1. Please use the Type-C interface to charge the RC.
2. Fully charged for about 4h with the designated quick charger.
3. Please use the official charger when charging the RC. If not, it is recommended to use an FCC/CE-compliant, 5V 2A charger or a 9V 3A fast charger that complies with the QC2.0 protocol.
4. To ensure the best condition of the RC battery, please make sure to fully charge the RC every 3 months.
5. If the RC is found to have a peculiar smell, smoke or liquid leakage, etc., stop charging and send it back for inspection and identification in time.
6. Do not charge the RC when the ambient temperature exceeds 60°C.
7. Keep the RC away from infants' and toddlers' reach while charging. It is recommended not to leave it unattended.

1.1.5. Frequency-pairing Instruction

If the user purchases the drone as a whole set, the RC transmitter and the drone have been frequency-paired before dispatching and can be used directly after power-on. In other cases, use the following methods to match the frequency:

1. Turn on the RC parameter adjustment assistant, as shown below.

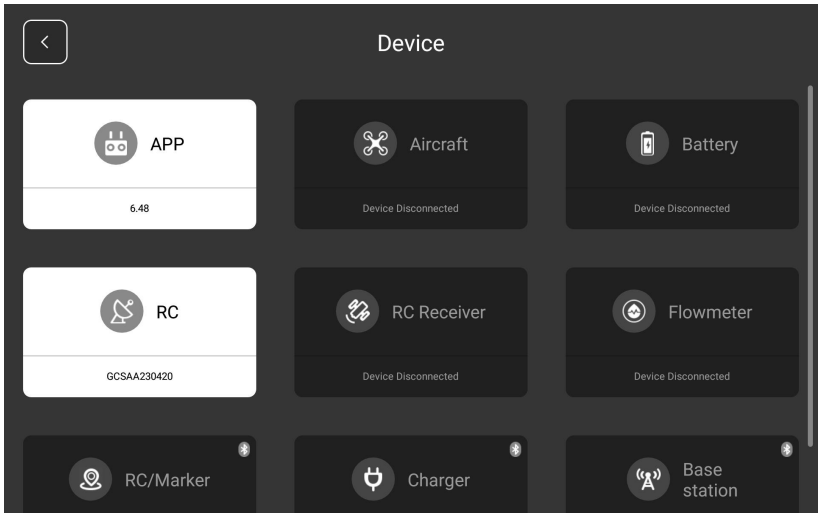

©2023 Topxgun (Nanjing) Robotics Co., Ltd. All Rights Reserved

Figure 1-7

2. Click the “Start Linking” button, the indicator light of the RC will be flashing cyan. APP shows a pop-up of “frequency pairing” and there is a 30s time limit to turn on the RC.

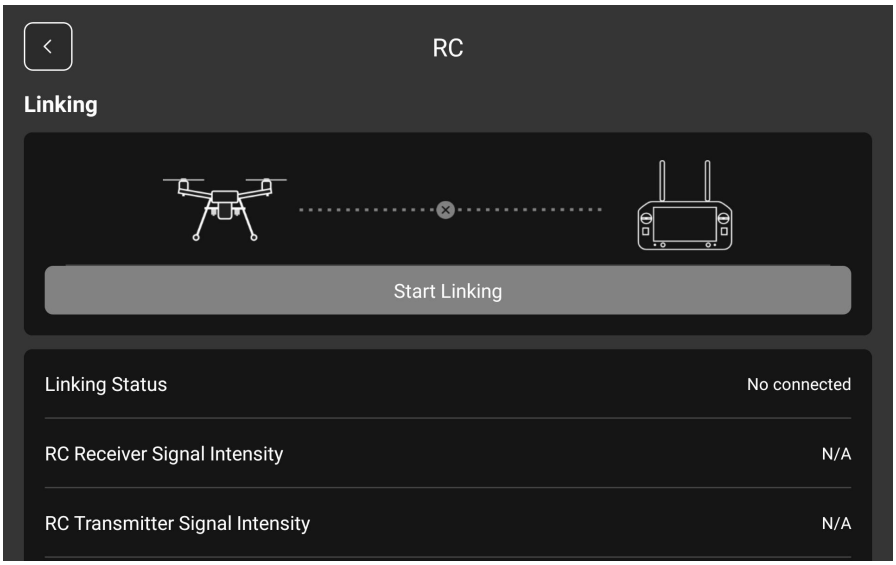

Figure 1-8

3. Long press the power button for 5 seconds until you hear a beep. “Pairing Succeed” will be shown on the APP interface. The RC indicator will be solid green. If you haven’t press the pairing button in 30 seconds, the pairing will be failed.

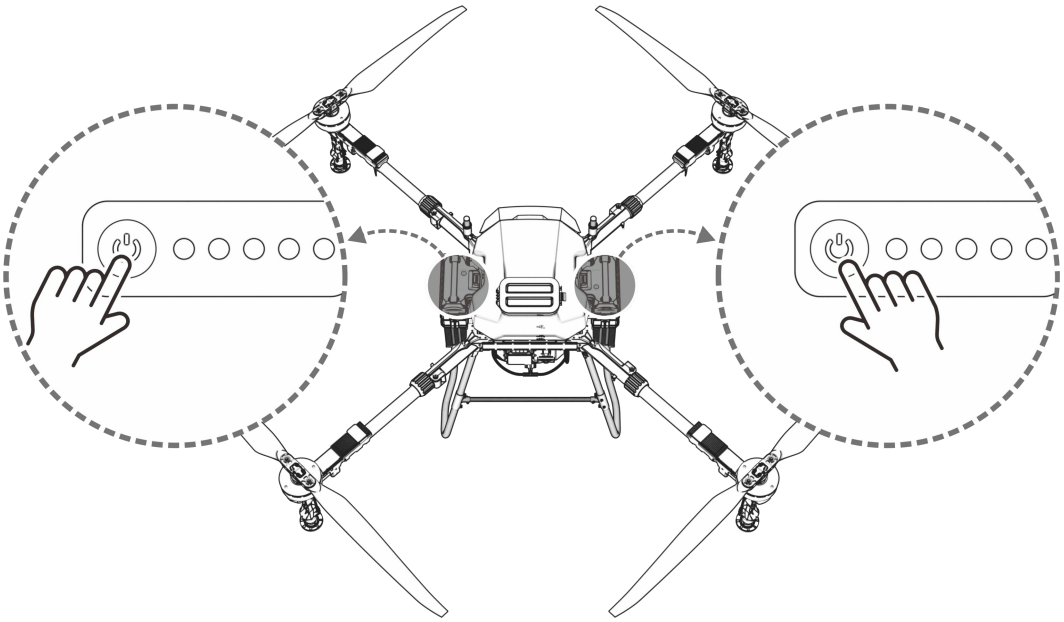

Figure 1-9

Notes:

1. Keep the distance between the RC and the receiver within 1m while pairing.
2. Ensure the propeller is removed from the drone during frequency pairing, and keep a safe distance from drone motors.

©2023 Topxgun (Nanjing) Robotics Co., Ltd. All Rights Reserved

1.1.6. Specification Parameters

Wi-Fi	
Protocol	IEEE 802.11b/g/n20/n40, Wi-Fi compliant
Operating Frequency	2412-2462Mhz
FPV Camera	
Pixel	4 million
View Angle	140° horizontally, 87° vertically
Video Resolution	720p
FPV Searching Light	15lux @5m direct light (Rear searching light)
Display	
Screen Size	7 inch
Touching Mode	Capacitive
Screen Resolution	1920x1200
Other Parameters	
Operating System	Android OS
Operating Temperature	-15°C - 40°C
Storage Temperature	-25°C - 60°C
Charging Environment Temperature	5°C - 40°C
Battery Type	20000mAh @3.7V lithium battery
Charging Time	About 4h (using official fast charger)
Continuous Working Hours	More than 6h
FPV Camera	DC 12V, less than 0.5A
Receiver	DC 5V 1A
Weight	About 1120g

©2023 Topxgun (Nanjing) Robotics Co., Ltd. All Rights Reserved

1.2. Smart Battery Introduction

The smart battery equipped with this model is a polymer lithium power battery, featuring a compact size, light weight and large capacity.

1.2.1. Component Definition

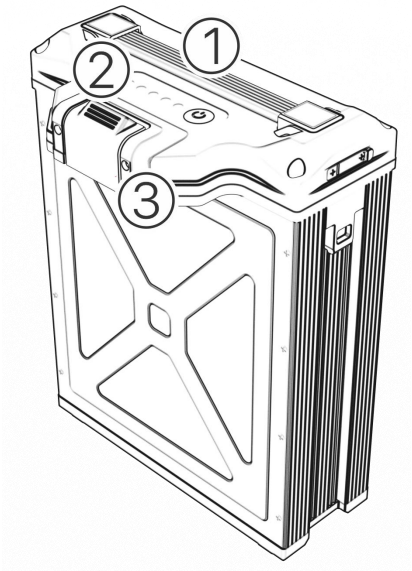

Figure 1-10 Battery Component
1. Handle 2. Indicator LED 3. Charging port

1.2.2. Specification Parameters

Subject	Parameter
Typical Capacity	20000mAh
Nominal Voltage	53.2V
Maximum Charging Current	100A (Environment Temperature 25°C ± 5°C)
Limited Charging Voltage	60.9V
Maximum Discharging Current	200A

©2023 Topxgun (Nanjing) Robotics Co., Ltd. All Rights Reserved

Operating Temperature	5°C - 40°C (Charge) -10°C - 40°C (Discharge)
Storage Temperature	Long-term storage: -10°C - 30°C (it is recommended to perform power replenishment and maintenance once every 3 months) Short-term storage: -10°C - 45°C
Weight	About 8.0kg

1.2.3. LED Indicator Status

1.2.3.1. Battery Status Display

Function	Precondition	Operation	LED Indicator	Note
Battery Level Checking	Sleep/Power off	0 (Short Press)	Display the current battery level for 5s	The battery level will be displayed for 5s after a short press
Power On	Sleep/Power off	0-1 (Short Press+Long Press >1s)	0, display the current battery level; 0-1, turn off the display. The LED indicators will light up one by one, then display the current battery level	0-1 MOS has been activated after power on
Power Off	Power On	0-1 (Short Press+Long Press)	0, display the current battery level; 0-1, turn off the display. The LED indicators will go off one by one	0-1 MOS has been deactivated after power off
RC Pairing	Battery is activated and RC is on the pairing interface	In the power on status 2 (Long Press>5s)	The LED 3 and 4 will flash while pairing. After the pairing is completed, LED indicators will revert to the original status	
Disconnect UPS	Battery is activated	Short press for 5 times, 0-0-0-0-0	0, display the current battery level	UPS is deactivated

Notes: 0 means short press, 1 means long press, 2 means long press >5S.

1.2.3.2. Battery Level Display

Notes: "●" means always on; "⊙" means the light flashes; "○" means no light

©2023 Topxgun (Nanjing) Robotics Co., Ltd. All Rights Reserved

LED5	LED1	LED2	LED3	LED4	Power Level
○	●	●	●	●	95%-100%
○	●	●	●	⊙	90%-94%
○	●	●	●	○	80%-89%
○	●	●	⊙	○	70%-79%
○	●	●	○	○	60%-69%
○	●	⊙	○	○	50%-59%
○	●	○	○	○	40%-49%
○	⊙	○	○	○	20%-39%
⊙	⊙	○	○	○	< 20%

1.2.3.3. Charging Status

LED1	LED2	LED3	LED4	SOC
⊙	⊙	○	○	0-59%
⊙	⊙	⊙	○	60%-79%
⊙	⊙	⊙	⊙	80%-100%

1.2.3.4. Error and Alarms

Situation	LED Indicator	Description	Notes
Upgrading	LED shows progress	Show upgrade progress	
High Charging Temperature Alarm	LED 5 flashes + LED 4 flashes 3 times/second	Battery charging temperature is too high	Stop charging
Low Charging Temperature Alarm	LED 5 flashes + LED 4 flashes 2 times/second	Battery charging temperature is too low	Stop charging
High Charging Voltage Alarm	LED 5 flashes + LED 3 flashes 3 times/second	Battery charging voltage is too high	Stop charging
Overcurrent Charging Alarm	LED 5 flashes + LED 2 flashes 2 times/second	Battery charging current is too large	Stop charging
Low Discharge Voltage Alarm	LED 5 flashes + LED 3 flashes 2 times/second	Battery discharge voltage is too low	Stop discharging

©2023 Topxgun (Nanjing) Robotics Co., Ltd. All Rights Reserved

Short Circuit/Overcurrent Alarm	LED 5 flashes + LED 2 flashes 3 times/second	Battery discharge current is too large	Restores after one minute of unloading
Battery Failure Alarm	LED 5 is always on when powering on	The battery cell voltage is less than 1.5V or the voltage difference is greater than 1V	It is strictly prohibited to disassemble by yourself, please contact the after-sales

Notes:

1. Activate the battery only after it is well connected to the drone.
2. Disconnect the battery after it is turned off.
3. Charge the battery to 60% every 3 months to ensure a longer service lifetime.
4. Before using, ensure sufficient battery level. When the battery has not been used for a long time, please use the dedicated charger to discharge the battery to the storage voltage, and then store it in a dry and ventilated environment.
5. This battery needs to be charged with a dedicated charger (TC9002P). In order to avoid accidents, please do not change the charger in any condition.
6. Do not use batteries if they emit odors or heat, or they are in an abnormal shape/color or has any other problems. If the battery is in use or charging, it should be immediately removed from the drone or charger. Stop using this kind of battery.
7. It is normal that the flight time will be shortened when the ambient temperature is lower than 10°C.
8. The battery surface should be cleaned in time after the operation, in order to avoid agrochemical corrosion.
9. The drone is strictly forbidden to be used in the environment of strong static electricity, magnetic field or high voltage power line.
10. It is strictly prohibited to pierce the battery case with nails or other sharp objects, or to hammer or step on the battery.
11. If the electrolyte enters eyes after the battery leaks, rinse the electrolyte out instead of rubbing the eye. Seek medical help immediately. Eyes will be injured if not treated in time.
12. It is strictly prohibited for non-professionals to disassemble the battery.
13. Keep away from fire sources when using batteries.

1.3. Charger Introduction (TC9002P)

TC9002P intelligent charger is a dual-channel lithium-polymer battery charger with a built-in cooling system. It can achieve constant power charging with a maximum charging current of 165A.

©2023 Topxgun (Nanjing) Robotics Co., Ltd. All Rights Reserved

1.3.1. Components

The definition of the charger components is shown in Figure 1-11 & 1-12.

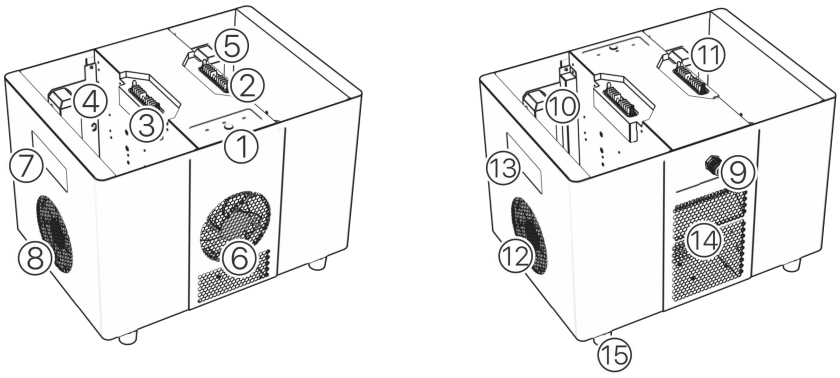

Figure 1-11 Charger Components

1. Operation panel	2 & 3. Battery connector	4 & 5. Battery supporting frame	6. Power cooling fan
7 & 13. Handle 1	8 & 12. Battery cooling fan	9. AC power input	10 & 11. Battery holder
14. Dust net	15. Shock-absorbing base		

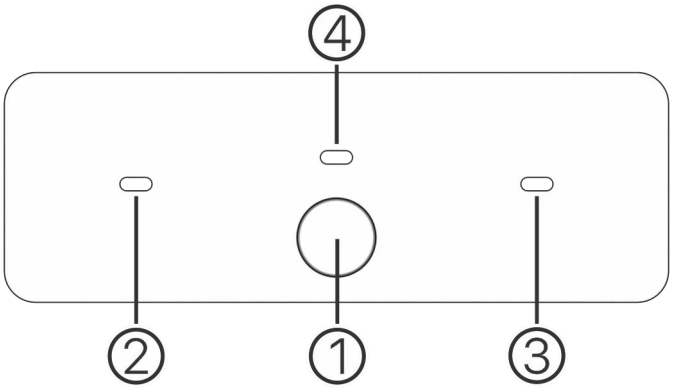

Figure 1-12 Charger Operation Panel

1. Power on/off button	2. Charging status indicator 1	3. Charging status indicator 2
		4. Warning indicator

1.3.2. Function Description

1.3.2.1. LED Status Indicator Description

1) Power-on self-check:

Confirm that all terminals are correctly connected. When the charger power is turned on, both the charging status indicator and the alarm indicator light up. After a single beep, the lights go out, the self-test is completed, and the charging status indicator

©2023 Topxgun (Nanjing) Robotics Co., Ltd. All Rights Reserved

breathes normally. For the 220V system: 2 seconds on, 1 second off; for the 110V system: 1 second on, 1 second off.

2) Battery charging status indicator

LED Flashing Status	Prompt Sound	Description	Notes
OFF	/	No battery connected to the corresponding port	Battery not detected. The battery is in low-temperature protection (cell temperature <3 degrees) or high-temperature protection (cell temperature >70 degrees). Because the MOS not turn on, the charger cannot detect the battery voltage, and the channel light is also in an extinguished state.
Yellow Solid On	/	The battery is connected to the corresponding port, waiting for charging	
Green Breathing	/	The corresponding battery is in slow charging state	Charging start-stop stage or in a situation where only one module is supplying power.
Green Fast Flashing	/	The corresponding battery is in fast charging state	
Green Solid On	/	The battery connected to the corresponding port is fully charged	
Yellow Continuous Single Flash	/	Battery temperature is too low, so the charging current is limited	Check the battery current limiting flag.
Yellow Continuous Triple Flash	/	Battery temperature is too high, so the charging is prohibited	Check the battery over-temperature protection flag.
Red Single Flash	D.D.D…	The battery is not plugged in/unofficial battery/communication error	No communication with voltage or communication with no voltage.
Red Triple Flash	D.D.D…	BMS error	Excluding battery low-temperature protection and high-temperature protection.
Red Solid On	D.D.D…	Output over-voltage/other hardware error	Re-powering to recover
Blue Solid On	/	Incompatible battery type, charging is prohibited	

©2023 Topxgun (Nanjing) Robotics Co., Ltd. All Rights Reserved

3) Charger warning indicator

LED Flashing Status	Prompt Sound	Description	Notes
Yellow Single Flash	/	Charger temperature is too high	Self-directed derating
Yellow Double Flash	/	Input voltage is under voltage	Self-directed derating
Yellow Triple Flash	/	Input voltage is high	Charge normally
Red Signal Flash	D.D.D…	Ambient temperature is too high or fan malfunction	Stop charging
Red Double Flash	D.D.D…	Fault in charger input voltage (Under-voltage protection)	Stop charging
Red Triple Flash	D.D.D…	Fault in charger input voltage (Over-voltage protection)	Stop charging
Red Solid On	D.D.D…	Output over-voltage or other hardware faults	Stop charging, power off and restart to
Blue Solid On	/	Only one power module is working	/

4) Activation indicator

When the battery is not connected and the power button is pressed, the activated and deactivated indicators are as follows:

Status	Prompt Sound	Battery Status Indicator	Warning Indicator	Operating indicator
Deactivated	/	Solid White	Solid White	FLASH
Activated	/	OFF	OFF	FLASH

1.3.2.2. Charging Logic

Dual-Charging Mode: The two power modules built into the charger charge the corresponding batteries on each side, and the charging current is determined according to the battery's demand.

Single-Charging Mode: When only one battery is connected, one of the built-in power modules in the charger charges the battery. When the charger is connected to two batteries with only one AC input, it first charges the battery with higher capacity before charging the battery with lower capacity.

©2023 Topxgun (Nanjing) Robotics Co., Ltd. All Rights Reserved

1.3.2.3. Cooling System Working Logic

During the charging process, if the charger detects that the battery temperature or the charging board temperature is too high, the cooling fan will be activated. The fan speed is intelligently adjusted based on the temperature.

1.3.2.4. Charging Steps

Step 1: Insert the power cable to the charger's power port, and insert the other connector to the AC power supply (200-240V, 50/60Hz).

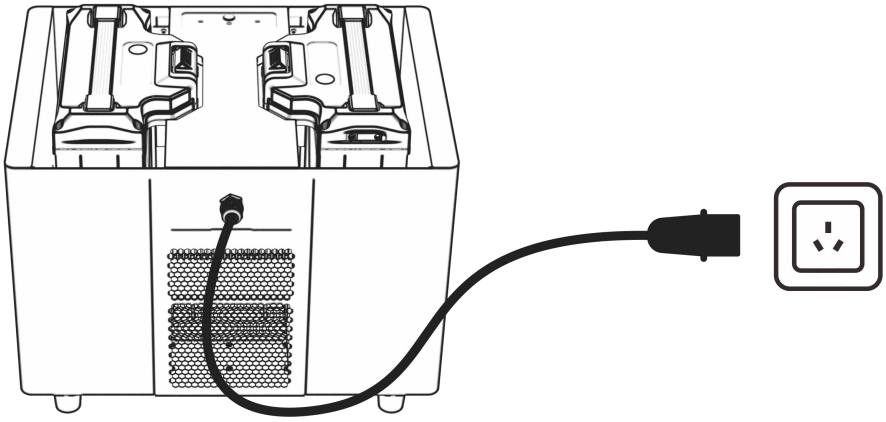

Figure 1-13 Charger Power Cable Connect

Step 2: Put the battery into the charger. Please pay attention to the direction of the connector. Check that there are no foreign objects at the bottom of the charger. After placing it, check whether the battery is in place.

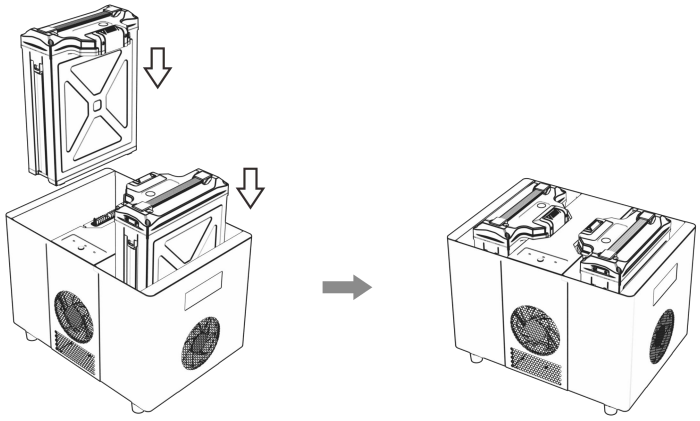

Figure 1-14 Battery Placement

Step 3: After making sure that all wires are connected correctly, press the “Start/Stop” button in the operation panel, and the charger will start self-check. If some error

©2023 Topxgun (Nanjing) Robotics Co., Ltd. All Rights Reserved

occurs during the self-test process, please refer to the indicator status chapter.

Step 4: Press the "Start/Stop" button in the operation panel to turn off the battery after charging, unplug the AC power cable, and unplug the battery. Please follow the rules below:

Battery State	Channel Indicator State	Plug or Unplug Battery Instruction
Fully charged	Solid Green	Unplug battery directly
Charging	Green Flashing	If plugging or unplugging is needed, please press the start/stop button first. Plugging or unplugging directly is prohibited

Notes:

1. Do not use the product in direct sunlight, high humidity, high temperature, dust, vibration or thunder/lightening.
2. Products should be kept away from dangerous substances such as high pressure, heat source, corrosive agent, flammable gas, etc., and must be used at appropriate ambient temperature (5-45°C is recommended).
3. The product should be placed horizontally and stably, ensuring good ventilation and heat dissipation conditions during operation.
4. When charging, please strictly follow the battery safety instructions and cautions.
5. Before connection, please ensure that all ports and input lines of modules and batteries have no obvious defects such as blockage, damage, breakage or short circuit.
6. Before use, please ensure that the power supply line has enough capacity to avoid overheating or even fire caused by insufficient capacity, especially when two or more pieces of equipment are used at the same time.
7. Do not pull out the input wire or battery when the charger is working. Pull out the battery in time after charging.
8. Be sure to place the battery in place before starting charging.
9. The cooling box has a limited load-bearing capacity. Do not load the battery for transportation, otherwise the battery and charger may be damaged.
10. This charger is only applicable to the battery of this drone. If the user uses the charger for purposes other than those listed in the manual, the Company shall not assume any responsibility.
11. Do not leave the charger unattended when it’s working. If any function is not normal, please stop charging immediately.
12. In case of fire, do not use liquid extinguisher to avoid electric shock. Use dry powder extinguisher correctly.

©2023 Topxgun (Nanjing) Robotics Co., Ltd. All Rights Reserved

1.3.3. Specification Parameters

Subject	Parameter
Input Voltage	AC 220-240V/50-60Hz
Input Power	9000W
Charging Current	Max 165A
Charging Mode	Constant power charging
Working Temperature	-5°C - 45°C
Working Humidity	0% - 75%
Storage Temperature	-10°C - 70°C
Storage Humidity	0% - 75%
Voltage Detection	Support
Protection	Over-current protection Over-temperature protection Over-voltage protection Short circuit protection
Communication Interface	CAN
Weight	About 20.0kg
Dimension	430*320*300mm

1.4. Spreading System (Optional)

1.4.1. Introduction

Spreader is one of the most important functional parts of agricultural drones. Compared with traditional manual spreading operation (low efficiency, high cost and poor uniformity), the drone spreader can greatly improve the efficiency, reduce the cost and improve the quality at the same time. This model supports two types of spreaders: the SP4 air-blowing type and the SP5 centrifugal type. You can choose the configuration according to your needs. This manual uses the SP5 centrifugal spreader as an example for illustration.

Air-blowing Spreading: The spreader adopts a downwind guide design, using high-speed airflow to evenly disperse particles, which can effectively prevent damage to seed and drone body.

Centrifugal Spreading: The spreader uses the high-speed rotating material disc to uniformly throw particles, it features a wide spreading range and easy adjustment.

Precision Spreading: Both spreaders are equipped with a built-in rolling feeder, allowing precise control of the material discharge volume by adjusting the discharge rate in real-time based on the preset dosage and flight speed.

Application Scenario: Seeding of rice, wheat, etc.; Second Seeding in Grassland;

©2023 Topxgun (Nanjing) Robotics Co., Ltd. All Rights Reserved

Fertilizer spreading; Fish food feeding, etc.

1.4.2. Spreading System Installation (Using the SP5 centrifugal spreader as an example)

1.4.2.1. Preparation

Since the spraying system and the spreading system share the 3WWDZ-50B platform, the components of the spraying system need to be removed before the spreading system is installed. The replacement process takes less than 10 minutes.

Notes: During the replacement, the batteries must be removed from the drone!

1.4.2.2. Spraying System Removal

1. Remove the two plugs of the spray/spread on the HUB module and pull the wire out of the cabling holder on the tank.

Notes: Prevent agrochemical (neither liquid nor solid) from the port during the removal.

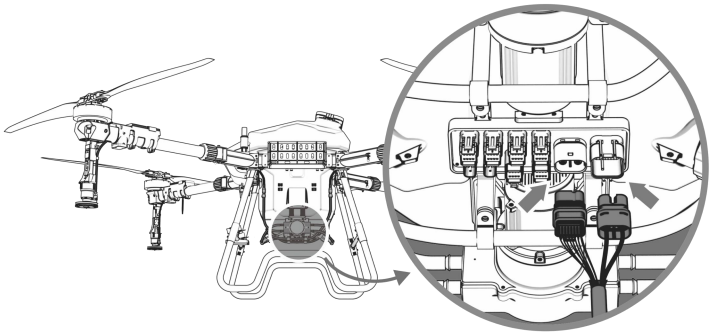

Figure 1-15

2. Unplug the quick disconnect connector of the pipe on both sides of the drone to remove the pipe between the pump and the nozzle.

Notes: If you need to switch the spraying system to spreading system, it is recommended to apply some liquid on the head of the pipe for lubrication.

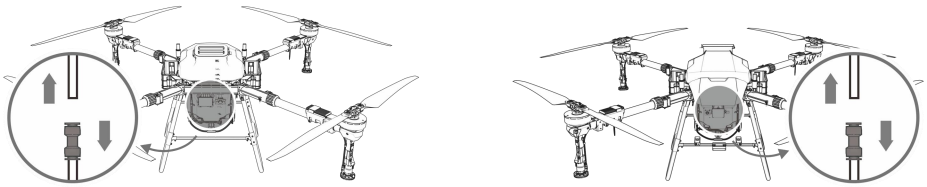

Figure 1-16

3. Remove the tank up straight from the drone.

©2023 Topxgun (Nanjing) Robotics Co., Ltd. All Rights Reserved

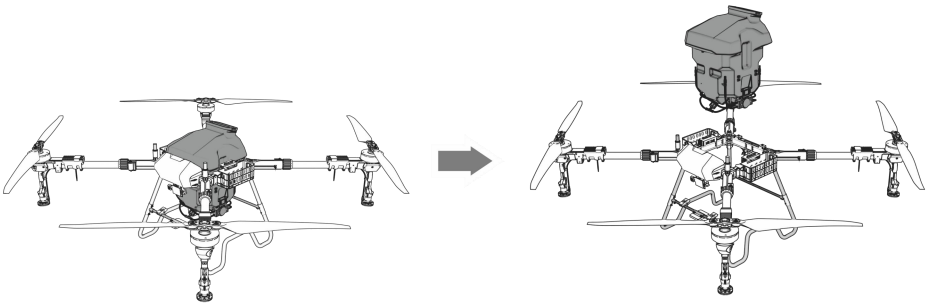

Figure 1-17

Notes: Do not scratch the surrounding wire during the tank removal.

1.4.2.3. Spreading System Installation

1. Tilt the spreader into the body frame as shown in the figure. Do not scratch the surrounding wiring. Adjust the tank to make sure its supported by four weight sensors. Prevent agrochemical (neither liquid nor solid) from the port during the installation.

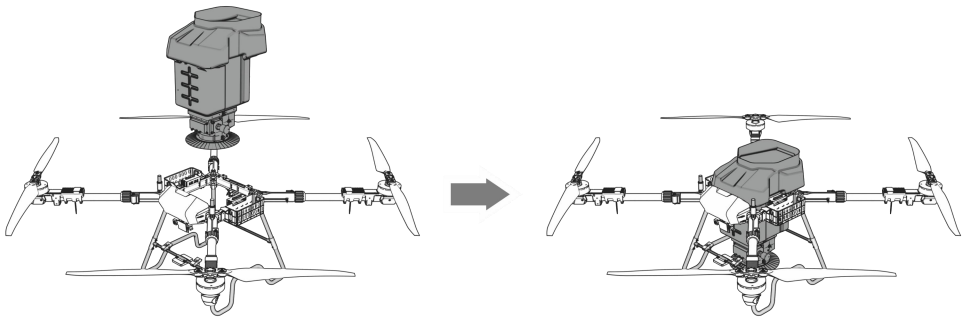

Figure 1-18

2. Insert the two plugs of the spray/spread outgoing line into the two reserved interfaces on the HUB module of the spreader respectively. Fix the wire on the clamp on the container.

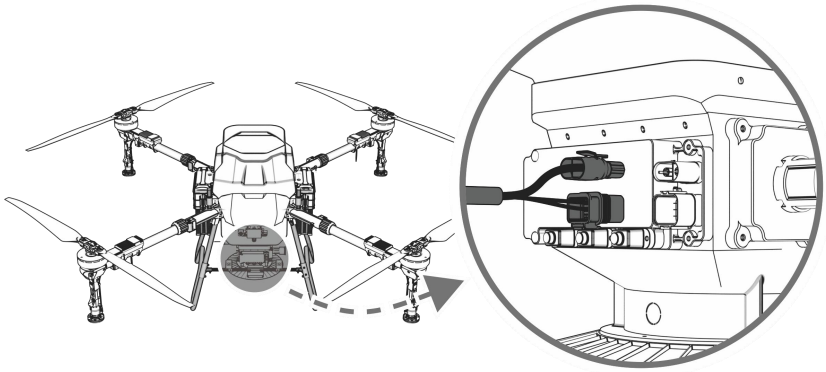

Figure 1-19

©2023 Topxgun (Nanjing) Robotics Co., Ltd. All Rights Reserved

1.4.3. Spreader Basic Operation

1.4.3.1. Usage

1. Turn on the remote control and the drone according to the instruction.
2. Enter the Agriculture Assistant APP after step 1 finished.
3. For the first time use of spreading system, please enter the setting interface. Choose the corresponding spreader type in the operation mode list.
4. Choose the roller type and material type in the setting interface according to the actual situation.

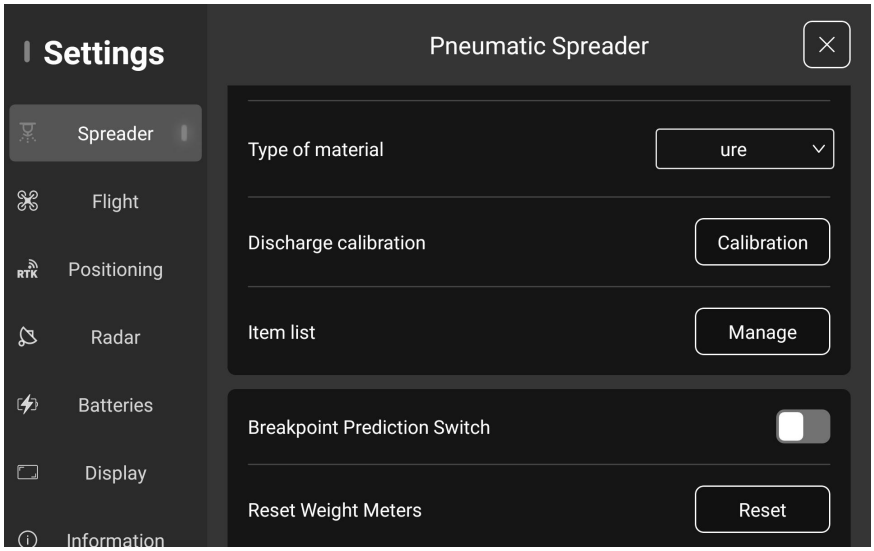

Figure 1-20

5. Set the dosage, route spacing and operating height in the parameter setting interface. The parameter will be different in different scenario. Please adjust the parameters and conduct tests based on the materials and scenarios used to achieve the best operational results.

Figure 1-21

Notes:

1. Please keep the granule for operation dry.
2. If you change the granule or rolling feeder, please operate the calibration.

1.4.3.2. Spreading System Calibration

Preparation:

1. Please prepare the granule before the calibration. Place the drone on the plain surface, and completely empty the container.
2. Select the type of rolling feeder and granule type. If the granule is used for the first time, click "Manage" to name it.

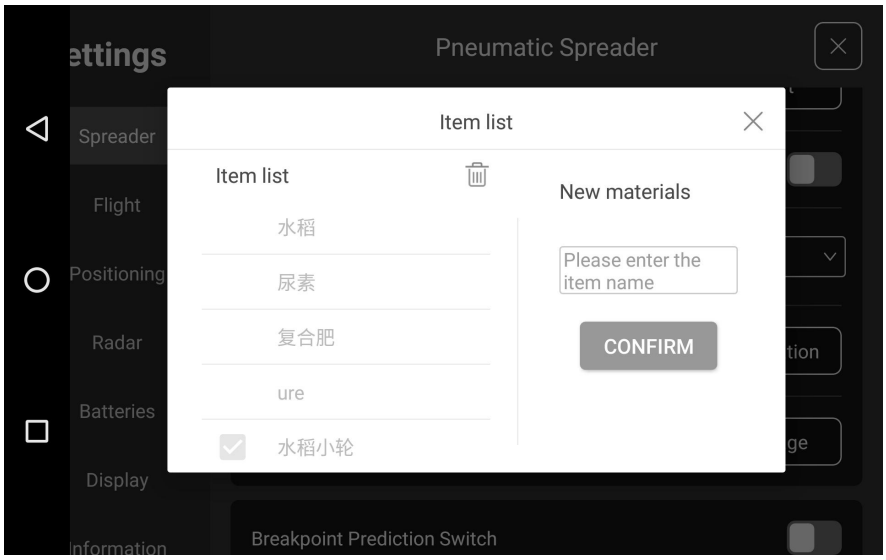

Figure 1-22

3. Click the Calibration to enter the calibration interface. Please operate according to the guidance on the APP. Here are the steps:

Step 1: Place the drone on a plain surface and make sure the container is empty.

Notes: If the drone is not placed on a plain surface and the offset angle is large, the next steps of calibration cannot be operate.

©2023 Topxgun (Nanjing) Robotics Co., Ltd. All Rights Reserved

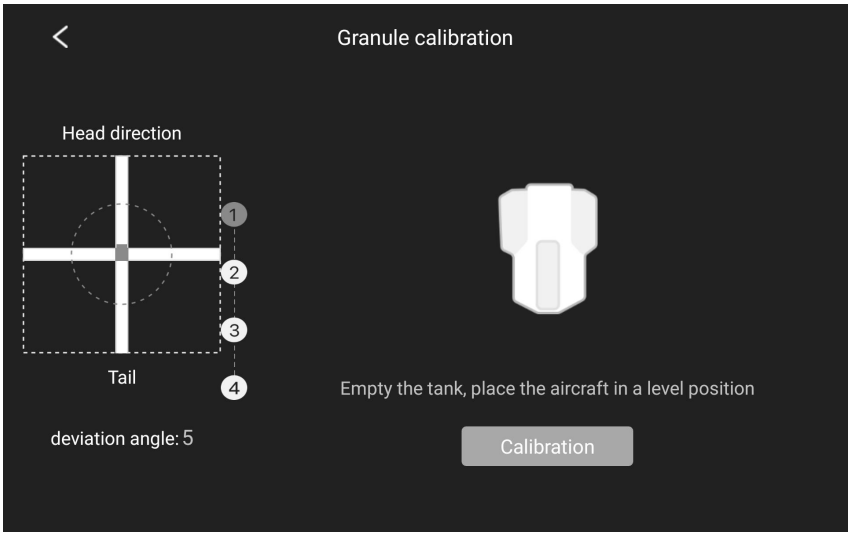

Figure 1-23

Step 2: Click ‘Tare’

Notes: If the tare calibration has been completed before, click "Skip".

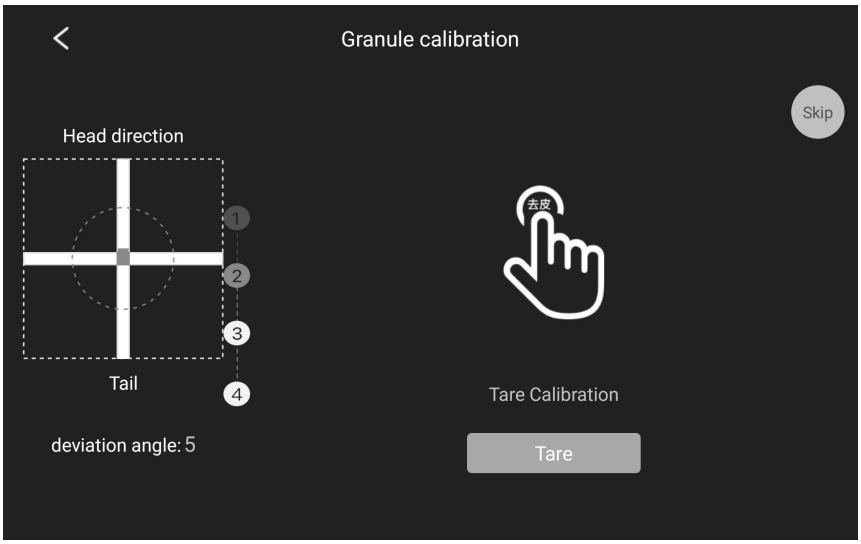

Figure 1-24

Step 3: Fill the container. Click “Complete” after filling it, the calibration will start automatically.

Notes: Do not touch the drone during the calibration.

©2023 Topxgun (Nanjing) Robotics Co., Ltd. All Rights Reserved

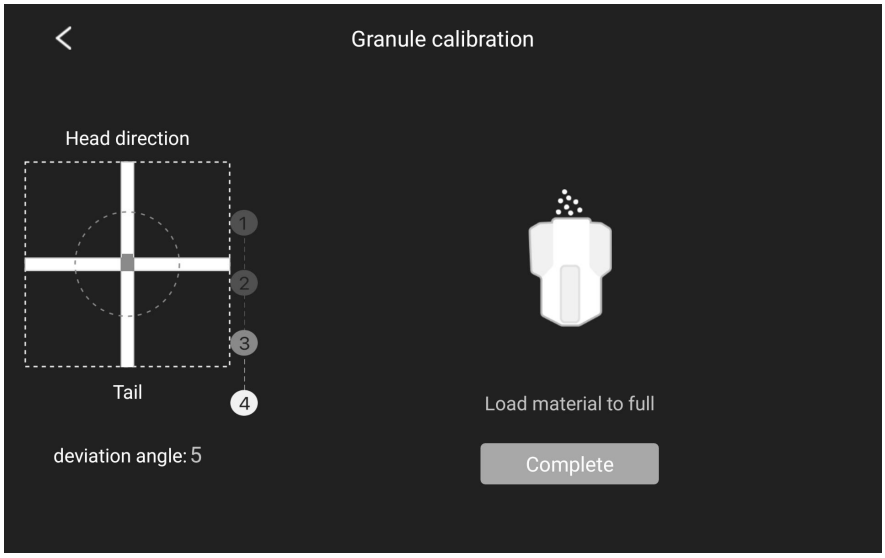

Figure 1-25

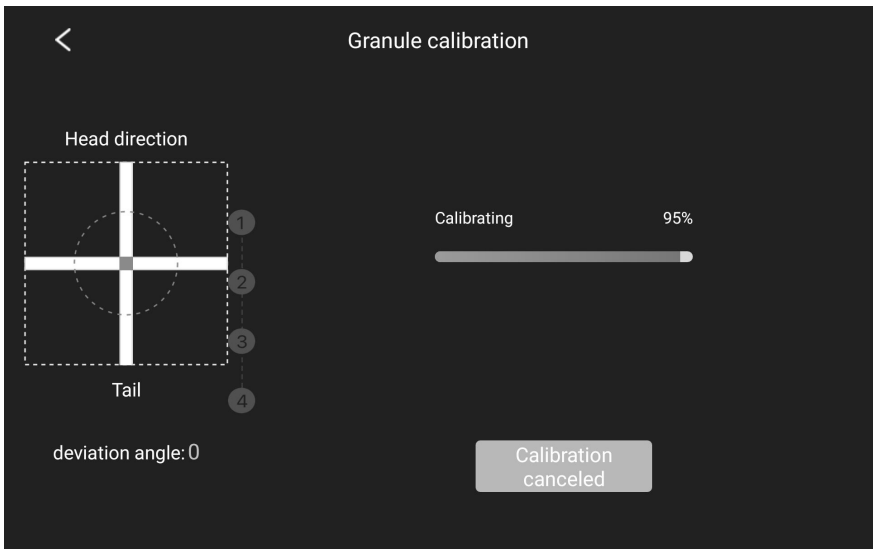

Figure 1-26

Step 4: The calibration coefficient will pop up when the calibration is completed.

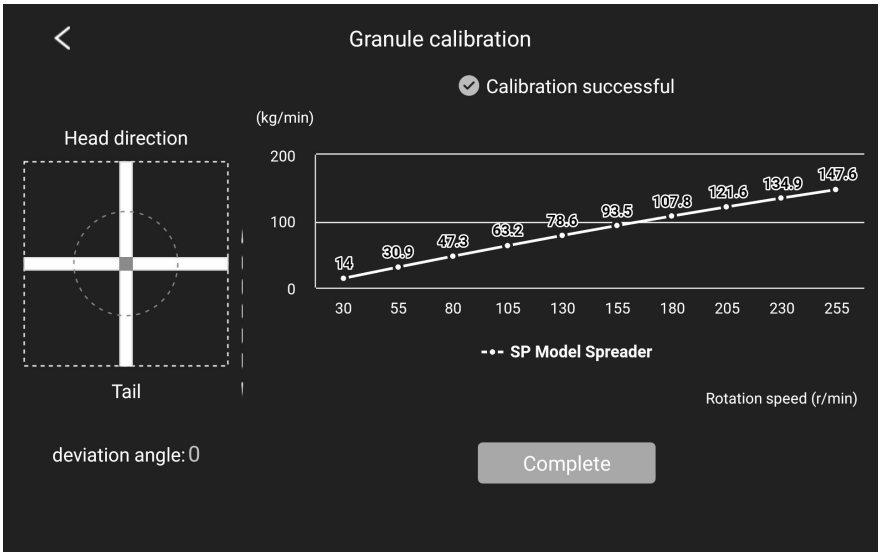

©2023 Topxgun (Nanjing) Robotics Co., Ltd. All Rights Reserved

Figure 1-27

Notes: If the calibration fails, please repeat the calibration according to the above steps.

1.4.3.3. Spreading Test

There is a spreading test function in the setting interface. Users can click the Start button before operation to make sure the rolling feeder and the fan work properly.

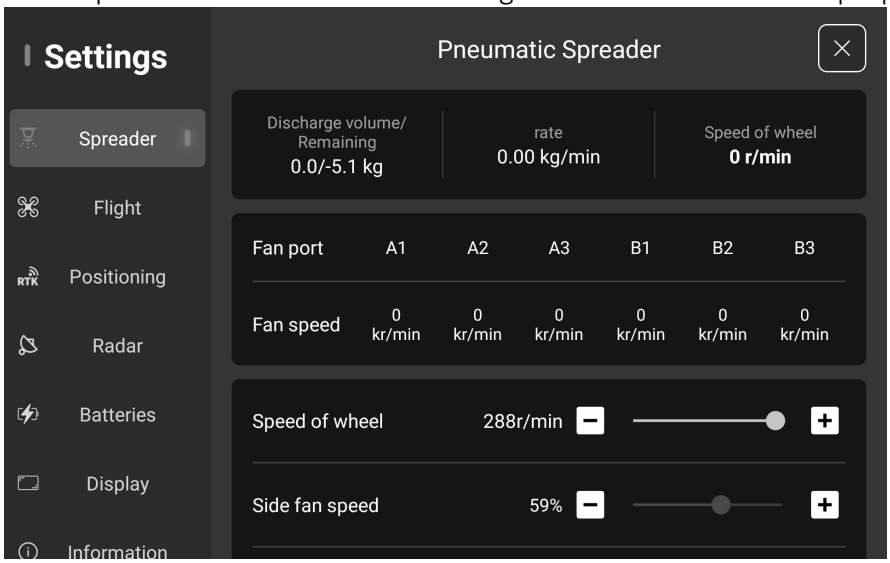

Figure 1-28

1.5. Drone Introduction

1.5.1. Functional Features

3WWDZ-50B agricultural drone has the following features:

1. Made of professional carbon fibers with lighter weight and higher strength. Foldable arms are designed for easy transportation.
2. The quickly removeable spraying and spreading system, along with the pluggable battery make mode changing easier, enhancing operational efficiency.
3. With a high-precision GNSS navigation system and IMU sensor, the drone has an accurate positioning function to ensure safety and reliability.
4. With the dual-channel high-flow metering pump, it offers a large flow and high spraying accuracy.
5. With four wind-pressure centrifugal nozzles, it provides excellent atomization and strong penetration.
6. Supports centrifugal and air-blowing spreading system optionally, allowing users to choose the most suitable spreading system based on actual needs.
7. The Agriculture Assistant APP supports smart route planning so that the drone can operate autonomously. It helps to make the pilot’s work easier.
8. Environmentally friendly with no exhaust emissions, aligning with energy-saving,

©2023 Topxgun (Nanjing) Robotics Co., Ltd. All Rights Reserved