eco-friendly agricultural development. It's easy to maintain, with low usage and maintenance costs.

1.5.2. Drone Components

Drone components are shown in the figure below.

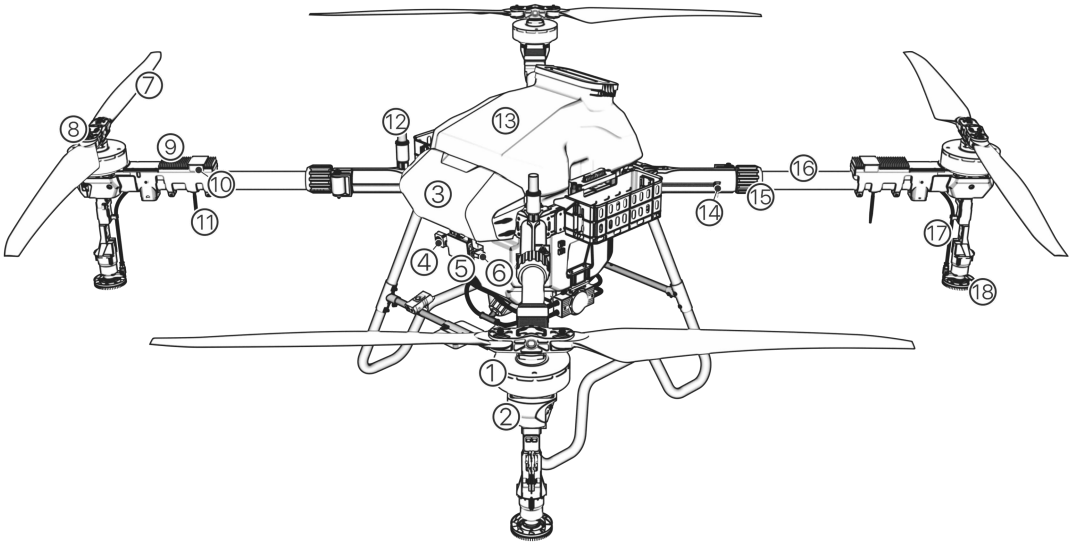

Figure 1-29

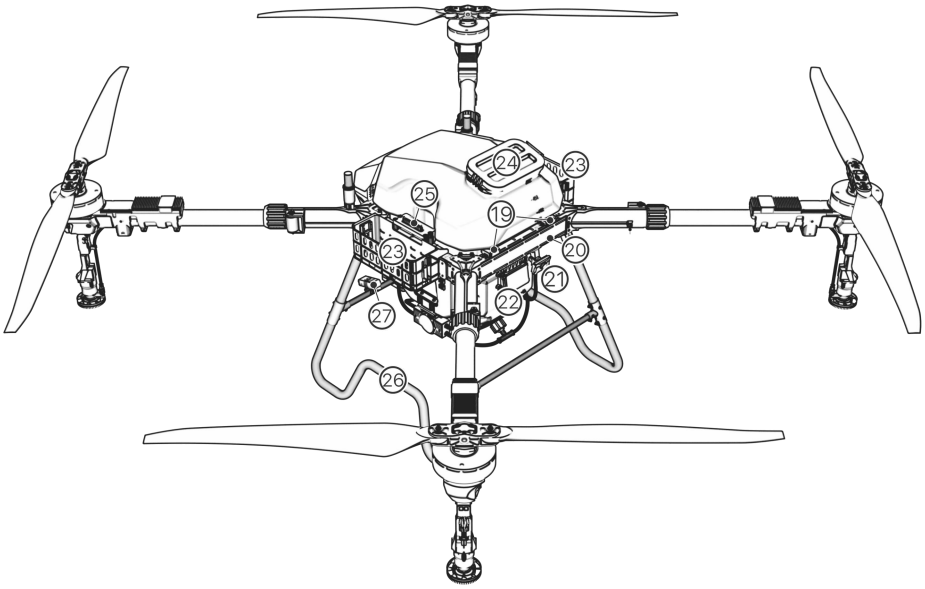

Figure 1-30

©2023 Topxgun (Nanjing) Robotics Co., Ltd. All Rights Reserved

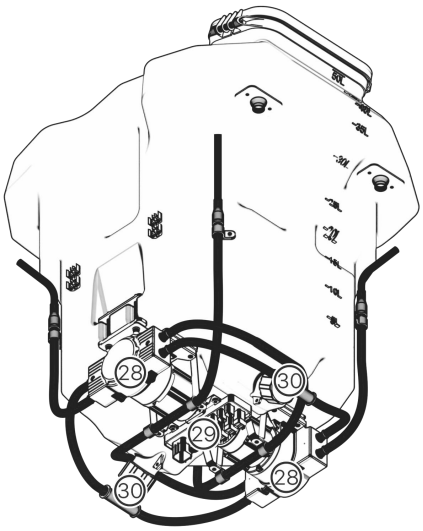

Figure 1-31

1. Motor	2. Motor Cover	3. Front Housing	4. Front FPV Camera	5. Front Obstacle Avoidance	6. Drive Servo
7. Terrain Following	8. Propeller	9. Electronic Speed Controller	10. Status Indicator	11. Antenna	12. RTK Antenna
13. Spraying Tank	14. Main Folding Arm	15. Folding Arm Sleeve	16. Arm	17. Liquid Outlet Pipe	18. Wind-Pressure Centrifugal Nozzle
19. Weight sensor	20. Body Frame	21. Front FPV Camera	22. Rear Obstacle Avoidance	23. Battery Basket	24. Tank Inlet
25. Power Distribution Board	26. Landing Gear	27. Front Searchlight (Optional)	28. Metering Pump	29. Spraying System Distribution Board	30. Tank Outlet

©2023 Topxgun (Nanjing) Robotics Co., Ltd. All Rights Reserved

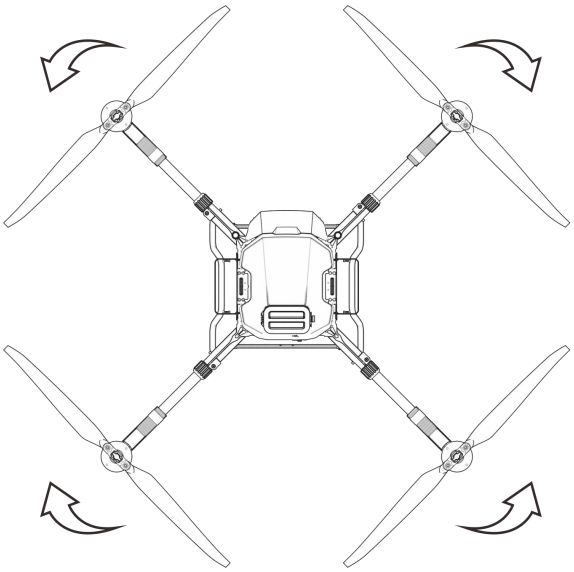

Figure 1-32

Notes:
The propellers on arm 1 and arm 3 rotate counterclockwise, while on arm 2 and arm 4 rotate clockwise. See Figure 1-32.

1.5.3. Drone Preparation

1.5.3.1. Unfold Arms

Step 1: Take 3WWDZ-50B drone out of the box.
Step 2: Horizontally rotate the propellers to remove them from the holder.
Step 3: Unfold the arms. See Figure 1-33.

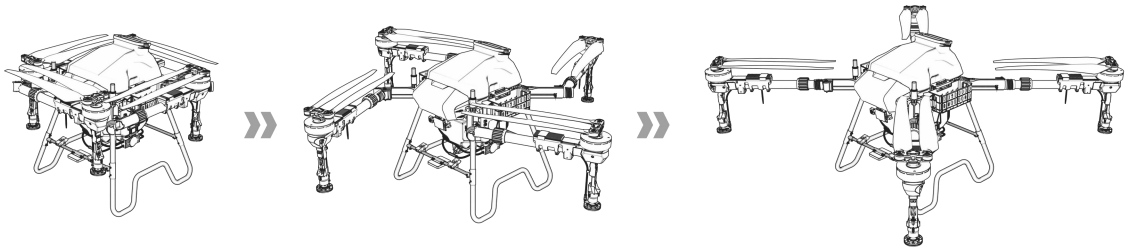

Figure 1-33 Arm Unfolding

Step 4: Make sure the clamping component is tightened, as shown in Figure 1-34.

©2023 Topxgun (Nanjing) Robotics Co., Ltd. All Rights Reserved

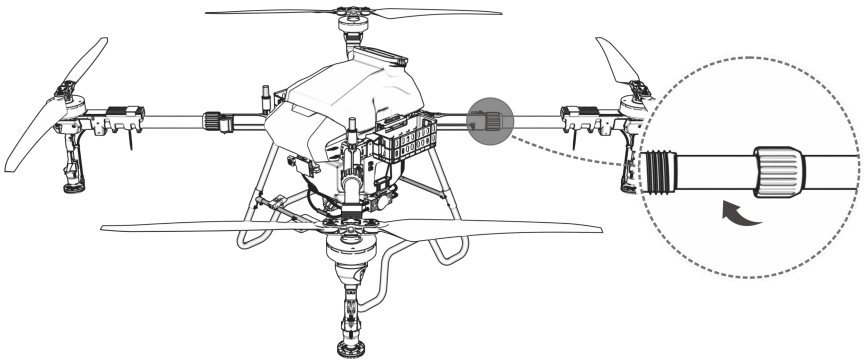

Figure 1-34 Arm Clamp

Step 5: Unfold the propellers to 180°, as shown in Figure 1-35.

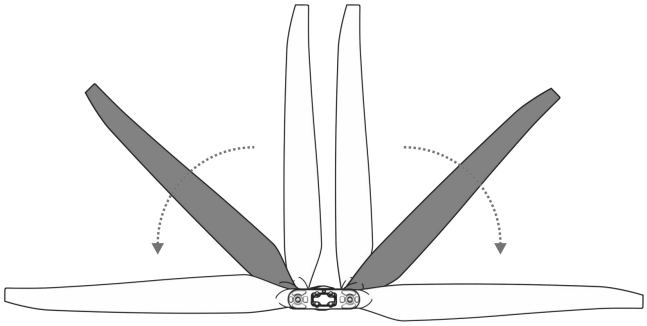

Figure 1-35 Unfold the Propellers

Notes: Be careful with your hands during the above process.

1.5.4. Install Drone Batteries

Be sure to use the official battery and check the battery level before flying.
Step 1: Place two smart batteries separately into the battery guide rails on both sides of the drone.
Step 2: Connect the battery output port to the body, and the battery is locked in when you hear a “click”. See Figure 1-36.

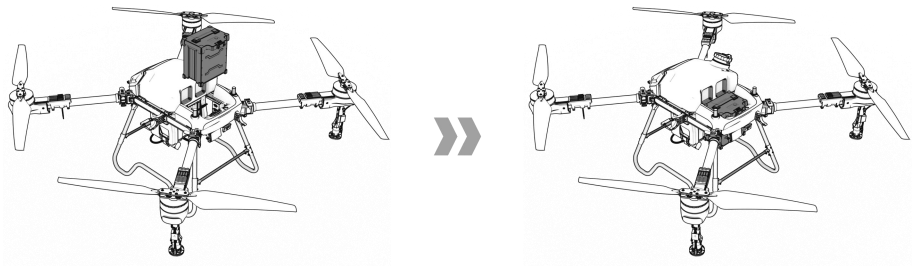

Figure 1-36 Insert the battery

1.5.5. Drone Calibration

1.5.5.1. Compass Calibration

Method 1: Access the calibration function via remote control

©2023 Topxgun (Nanjing) Robotics Co., Ltd. All Rights Reserved

Step 1: Pull down the throttle.
Step 2: Quickly toggle down "Flight Mode Switch" to the down position ("S") and toggle it up to the up position (“G”) for about 6-10 cycles until the status indicator light flashes blue.
Step 3: Place the drone head forward and keep the drone level with the ground. Slowly rotate the drone clockwise for at least one circle. If the status indicator flashes green, process to **Step 4**. If the status indicator is solid green, the calibration is completed.
Step 4: Lift the drone horizontally for more than 45° to the ground. Slowly rotate the drone clockwise for at least one circle until the status indicator shows solid green for 4s. The calibration is completed.
Step 5: Calibration fails if the status indicator shows solid red for 4s. Repeat **Step 2-4** until the operation succeeds. See Figure 1-37.

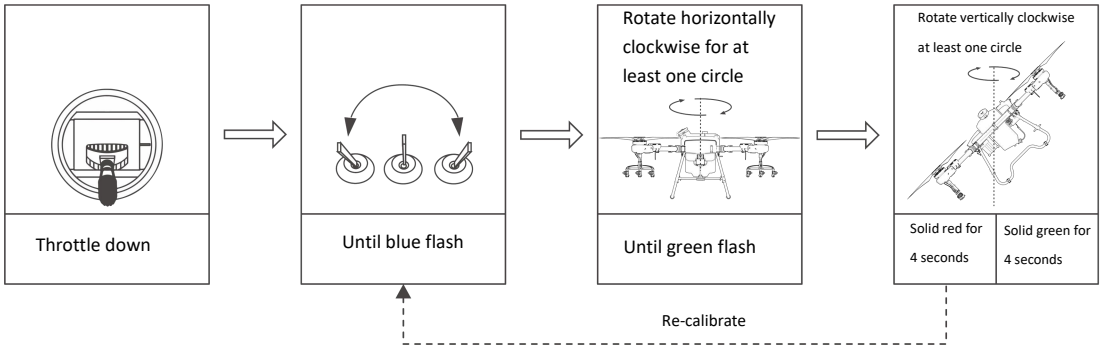

Figure 1-37 Compass Calibration

Method 2: Enter the calibration function via APP
Step 1: Click ••• on the right top in the APP to enter the Setting interface, and click into Flight Setting.

Step 2: Click

to enter the magnetic compass calibration interface. Click to start the calibration, and the drone navigation light flashes blue.
Step 3: Repeat the **Step 3-5** in **Method 1**.

Notes:

1. Before calibration, the propellers on the drone should be removed.
2. Do not calibrate it in areas with strong magnetic fields, such as magnetic mines, parking lots, building areas with underground steel reinforcement, etc.
3. During the calibration, do not carry ferromagnetic materials, such as keys, mobile phones, etc.
4. Do not calibrate the compass indoors.

©2023 Topxgun (Nanjing) Robotics Co., Ltd. All Rights Reserved

1.5.5.2. Flowmeter Calibration

When using the drone for spraying operations for the first time, be sure to perform flowmeter calibration to avoid affecting the operation effect.

Preparation before calibration: Press "" button to start the pump when the drone is on the ground to discharge the air from the pipeline.
Enter "Setting", "Spraying" interface. Click "Flowmeter Calibration".

Notes:
1. Re-calibrate after replacing with different nozzles.
2. Re-calibrate after replacing agrochemical with different viscosity.
3. Re-calibrate if the error between the actual operation area and theoretical operation area is more than 10%.

2. Flight

2.1. Flight Instructions

According to the regulations of the International Civil Aviation Organization (ICAO) and national air traffic control on airspace control and the regulation of drones, drones must fly in the prescribed airspace. For flight safety, the flight restriction function (including altitude and distance restrictions and no-fly area) is enabled by default to help users to use the product safely and legally.
When GNSS is available, the no-fly area affects the flight together with altitude and distance restriction. The drone flyable airspace is the intersection of restricted airspace. Without GNSS, the drone flight height is not limited by Agriculture Assistant APP.

2.1.1. Altitude and Distance Restriction

Height limit is used to limit the flight height of a drone and maximum radius is used to limit the flight distance. The maximum flying altitude of the drone on delivery is 30 meters. See Figure 2-1.

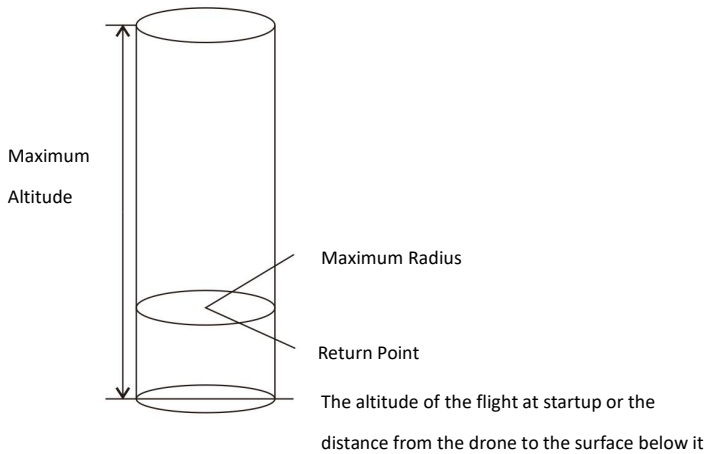

©2023 Topxgun (Nanjing) Robotics Co., Ltd. All Rights Reserved

Figure 2-1 Altitude and Distance Restriction

GNSS State	Flight Mode	Flight Limit		Notification
With GNSS	GPS mode and autonomous mode	Max Altitude	30m	Warning
		Max Radius	1999m	Warning
	Attitude mode	Max Altitude	20m	Automatically switch to GPS mode with warning
		Max Radius	1999m	Automatically switch to GPS mode with warning
Without GNSS	Attitude mode	Max Altitude	No limit	No warning
		Max Radius	No limit	No warning

2.1.2. No-Fly Zone and Restricted Area

2.1.2.1. No-Fly Zone

The area includes airport restricted flight areas and special flight restricted areas. For more details, please refer to special flight restricted areas defined by local authorities.

2.1.2.2. Restricted Area (when GNSS is available)

Areas are temporary restricted for flying due to emergencies (such as forest fires, large-scale events, etc.). The restricted area can be a circle or a polygon. The drone is not allowed to fly within the no-fly zone. See Figure 2-2.

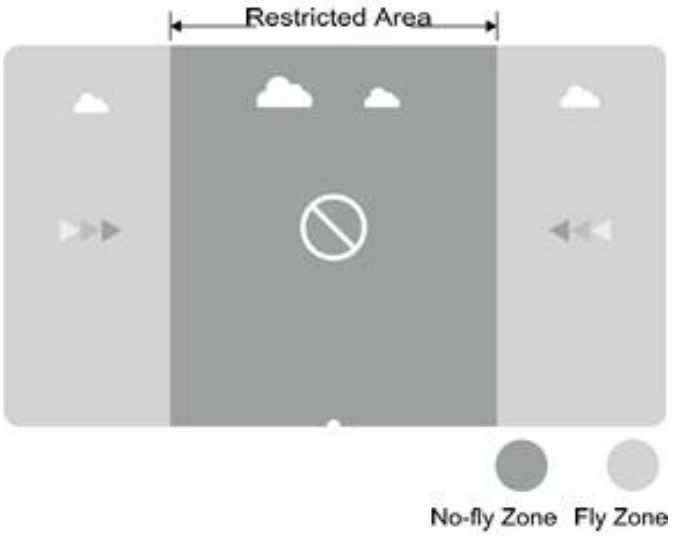

©2023 Topxgun (Nanjing) Robotics Co., Ltd. All Rights Reserved

Figure 2-2 No-fly zone and restricted area

When GNSS Signal Is Normal		
Area	Special Area with Flight Restriction	Status Indicator Light for the Drone
No-fly Zone	The motors can not be activated.	Red light solid on for 5s and off in 1s
	If the drone flies without GNSS, it will land automatically immediately after GNSS is available, and the motor stops automatically after landing.	
Close to No-fly Zone	Distance to the no-fly zone <120m. The drone flight speed will slow down with flashing lights and alarming.	Red light solid on for 5s and off in 1s
Fly Zone	The drone can fly normally. No flight restrictions.	No Warning

Notes: For flight safety, please try to avoid airports, highways, railway stations, subway stations or urban areas. If users need to fly in such areas, prepare relevant materials and apply for temporary airspace to local authorities. Then contact the after-sales service to release the restriction.

2.2. Indicator Description

On the first test flight, it is recommended to understand the meaning of the flight status indicators to ensure a safe flight.

No.	Status	Content	Indicator Display
1	Normal	Power on Self-check is completed GPS satellite searching	Flash yellow for twice
2		Preparation is completed; waiting for take-off	Solid yellow
3		Taking-off and flying	Head direction, solid red; Opposite head direction, solid green
4		Mode switch	Flash green for 5s
5		Magnetic compass calibration (Horizontal)	The indicator flashes yellow twice per second
6		Magnetic compass calibration (Vertical)	The indicator flashes green twice per second
7		Magnetic compass calibration succeeds	Solid green for 4s
8	Abnormal	Magnetic compass calibration failure	Solid red for 4s

©2023 Topxgun (Nanjing) Robotics Co., Ltd. All Rights Reserved

9		Self-check Failed	Solid red
10		Low Voltage/Volume Level I	Flash red slowly
11		Low Voltage/Volume Level II	Solid red
12		IMU failure	Solid red
13		Barometer failure	Solid red
14		GPS failure	Solid red
15		Independent magnetic compass failure	Solid red
16		Motor failure	Solid red
17		RC lose control	Solid red

2.3. Operation Description

2.3.1. Pre-flight Inspection

Please check the following points to avoid flight accidents.

1. Place the drone in the open operation area and the user should face the tail.
2. Make sure that the battery of the drone is installed properly.
3. Before flying, it is necessary to turn on the remote controller before plugging in the battery of the drone.
4. Ensure the battery of the drone and the remote controller are adequately charged, also the agrochemical required for spraying is sufficient.
5. Make sure that the motors and propellers rotate in the correct direction and the structure is stable. All arms and propellers of the drone have been fully extended, and the arm sleeves have been tightened.
6. Make sure that the spraying pipes are free of blockage and leakage, and the nozzles can spray water normally. If there is no liquid sprayed out during spraying test, please turn on the pressure relief valve on the side of the nozzles manually. After discharging the air, turn off the pressure relief valve, and the nozzles can be used for operation.

2.3.2. Lock and Unlock

2.3.2.1. Unlock

The unlocking operation is shown in Figure 2-3. When you unlock the drone, the motors rotate in the sequence of No. 1, No. 2, No. 3 and No. 4. When motor No. 1 starts, push the throttle slightly up and all the motors will start at the same time.

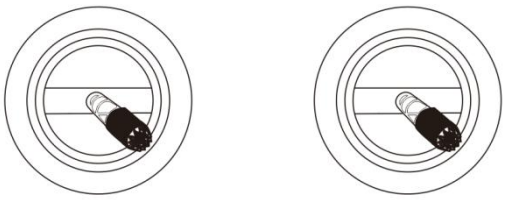

©2023 Topxgun (Nanjing) Robotics Co., Ltd. All Rights Reserved

Figure 2-3 Unlock

2.3.2.2. Lock

The drone supports two active locking methods:

1. Perform the operation shown in Figure 2-4 to lock the drone.
2. After the drone lands, the throttle stick should be kept at the down position for at least 3s, and then the drone will be locked automatically.

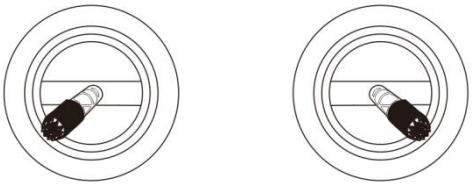

Figure 2-4 Lock

2.3.3. Take Off and Land

2.3.3.1. Take Off

Step 1: Click on “ ⏻ ” and then long press “ ⏻ ” for 2s to turn on the remote controller.
Step 2: Turn on the power supply of the drone.
Step 3: The pilot should keep a distance from the drone of more than 10m. Enter the operation interface of the Agriculture Assistant APP to ensure that the signal of GNSS is good, and the status indicator light of the drone is not showing red, which means there’s no warning.
Step 4: Perform the unlock action, the drone motors will start one by one, then slowly push up the throttle stick to take off.
Step 5: The drone remains at its current altitude and hovers after the throttle lever is centered, as shown in Figure 2-5.

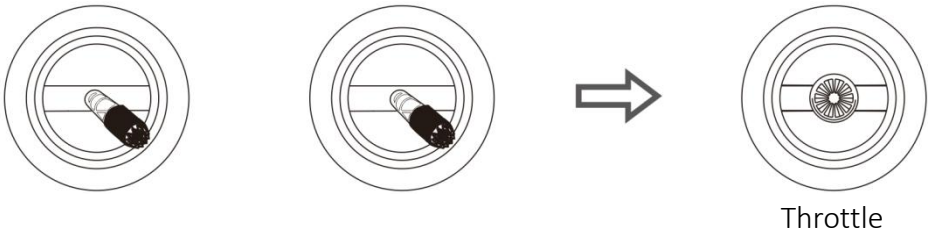

Figure 2-5 Unlock and Hover

2.3.3.2. Land

Step 1: Slowly pull down the throttle stick, and the drone lands on the ground.
Step 2: After the drone lands, place the throttle stick to the down position, and then perform the locking action as shown in Figure 2-6.

©2023 Topxgun (Nanjing) Robotics Co., Ltd. All Rights Reserved

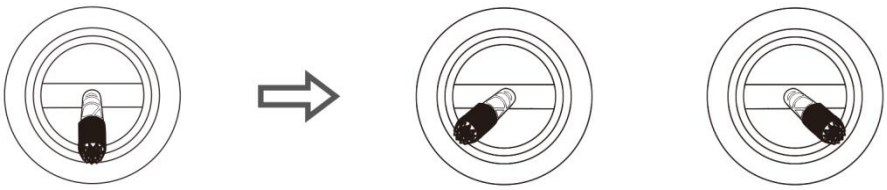

Figure 2-6 Land and Lock

Notes:

1. For the first test flight, the flight altitude shall not exceed 4m.
2. Do not fly beyond the visual range for the first test flight.
3. If there is light flashing showing an alert or there is a warning on the interface of the Agriculture Assistant APP during the flight, please land immediately and check the drone according to the plant protection assistant warning information.

2.3.4. GPS Operating Mode

2.3.4.1. Mode Introduction

GPS operation mode has the features of being easy-to-use and quick-to-start, which is suitable for the operation in small, irregular and complex fields. In GPS mode, the maximum flying speed of the drone is 10m/s. The spraying speed of the liquid is related to the flying speed. The faster the drone flies, the greater the flow rate is. When the drone hovers, the flow shuts down automatically.

2.3.4.2. Operating Procedure

Step 1: Before taking off, click "" button to start the testing spray, to check if there is air in the pipeline.
Step 2: The drone takes off and flies to the field for operation.
Step 3: Press the spray button "", and fly the drone to the field and start the operation.
Notes: During the operation, make sure that the drone is in the visual range.

2.3.5. AB Point Mode

2.3.5.1. Mode Introduction

AB point operation mode is suitable for use in the regular area. It has fewer operation steps. In the AB point operation mode, the drone can operate automatically after Point A and Point B are recorded. The spray will turn off automatically when the drone changes lines.

The flight route for AB point operation mode is shown in Figure 2-7. The dotted line length is the line spacing, which can be set in Agriculture Assistant APP according to

©2023 Topxgun (Nanjing) Robotics Co., Ltd. All Rights Reserved

the working conditions.

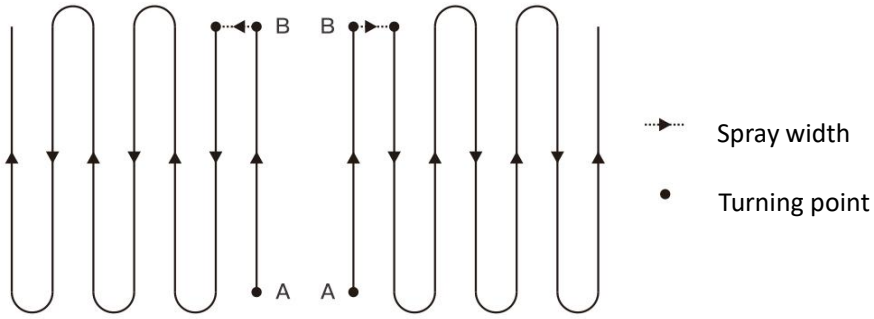

Figure 2-7 AB Point Operation Route

2.3.5.2. Operating Procedure

Step 1: After the drone taking off, fly the drone to point A of the operating field, and click the "A" Button. The Agriculture Assistant APP will send a voice notification of "Point A is recorded successfully".

Step 2: Fly the drone to the B point of the operating field, and click the " B" Button. The Agriculture Assistant APP will send a voice notification of "Point B is recorded successfully".

Step 3: Click the "AB" Button. The Agriculture Assistant APP will send a voice notification of "AB Point Mode".

Step 4: Toggle the RC stick to the left/right to fly the drone in the direction of the next line and then the drone will perform according to the planned route.

2.3.5.3. Exit AB Point Mode

The drone can exit AB point by the following methods:

1. No liquid is remained, and breakpoint has been generated.
2. Enter Automatic Obstacle Avoidance Hover Mode.
3. Manual emergency brake the drone. The drone will record the breakpoint and hover.
4. During the operation in AB Point Mode, click the "AB" button on the RC (blue light is off) and the drone will exit the AB point operation mode and hover. If the user clicks the "AB" button on the RC again, the drone will fly directly to the breakpoint or projection point and continue the operation. (Returning to the breakpoint or projection point can be set in the Agriculture Assistant APP).

Notes:

1. During the operation, it is necessary to ensure that the drone is within the visual range.
2. AB points can be recorded when the GNSS signal is strong and there is no breakpoint.
3. The distance between "A" and "B" point should be no less than 10m.
4. During operation, the flight altitude can be adjusted by the RC to meet the actual need. When the throttle is in the central position, the drone will maintain its

©2023 Topxgun (Nanjing) Robotics Co., Ltd. All Rights Reserved

current altitude.

2.3.6. Autonomous Operation Mode

2.3.6.1. Introduction

Users can survey the field and mark the obstacle, and set the border point using the field surveying function of the Agriculture Assistant APP. The Agriculture Assistant APP will calculate and generate the best route. This mode is suitable for large or irregular fields. The operation route of fully autonomous operation mode is shown in Figure 2-8. The dotted line shows the line spacing. It can be set in the Agriculture Assistant APP.

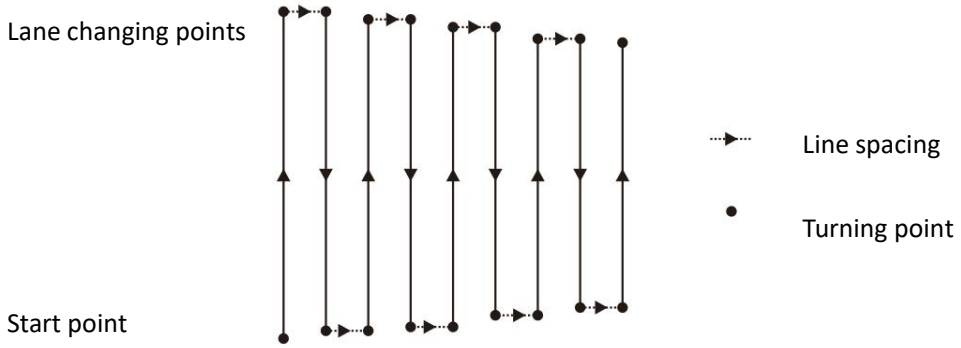

Figure 2- 8 Auto Operation Route

2.3.6.2. Field Mapping Steps

Step 1: Run the Agriculture Assistant APP and there will be three options (GPS mapping mode, drone mapping mode and RTK hand-held marker mapping mode), you can choose according to the actual situation.
Step 2: Set a name for the field.

Step 3: Mark the border points: select the points at each corner of the borderline.

Step 4: Mark the obstacle: if there are obstacles in the field, click the obstacle point and select the shape. Click on the turning points of the obstacle shape to set it as an obstacle point, and then click "OK" after the obstacle points setting is completed.

Step 5: Calibration point settings: after editing the operation area, calibration points need to be added. Calibration points are used for map rectification. When setting calibration points, make sure the reference object is easy to identify; the surrounding area is clear and suitable for the drone to take off. The operation area setting is completed when the calibration point is set.

2.3.6.3. Autonomous Operation Steps

Step 1: After the Agriculture Assistant APP is connected to the drone, click to expand the land/task list in the main interface.
Step 2: Select a field (or a field in the task list) and click to use the field.
Step 3: Place the drone at the calibration point of the operation area, click on

©2023 Topxgun (Nanjing) Robotics Co., Ltd. All Rights Reserved

“Calibrate”, then click “Calibrate Drone Position”.
Step 4: After the field is chosen, set the following parameters one by one: route angle, turning mode, route inner contraction, obstacle point spacing, altitude, usage per mu, ways of bypassing obstacle area.
Step 5: According to the route condition, select the routes ready to be sprayed (all routes are selected by default).
Step 6: Click “Start Operation” on the operation interface.
Step 7: Slide to unlock (please set the RTH height and take off height), and the drone will take off automatically and execute the planned route.
Step 8: Complete the operation (also can be finished manually during operation) and then generate the operation report.

Notes:

1. During the operation, it is necessary to ensure that the drone is in the visual range.
2. During the operation, the throttle stick of the RC can be toggled to adjust the flight altitude according to the plant condition. When the throttle stick is in the central position, the drone will resume its setting altitude.
3. For more detailed operation, please refer to the "User Manual of the Agriculture Assistant APP".

2.4. Function Introduction

2.4.1. Remaining Liquid

2.4.1.1. Introduction

3WWDZ-50B is equipped with a real-time level meter, which can detect the remaining liquid in real-time and display it in percentage to the users, as shown in the figure below. During operation, users can choose suitable breakpoints considering the remaining liquid and route length. This can reduce the time when drone is flying to the breakpoint and not operating, which will improve the operation efficiency.

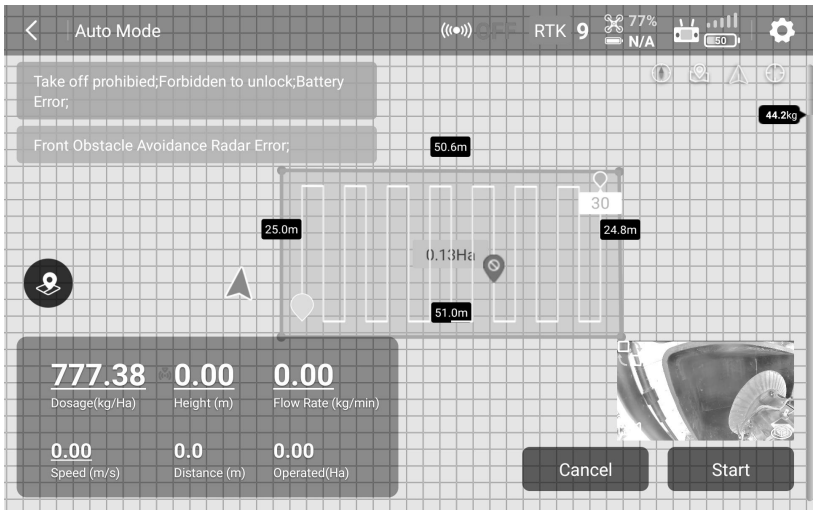

Figure 2-9

©2023 Topxgun (Nanjing) Robotics Co., Ltd. All Rights Reserved

2.4.2. Resume Operation From The Breakpoint

2.4.2.1. Introduction

If the breakpoint is recorded during the operation due to running out of agrochemical, low battery, manual braking, obstacle avoidance, etc., the drone can be set to resume operation from the breakpoint following the established route.

2.4.2.2. Record the Breakpoint

During the operation, the drone will record the breakpoint and resume the operation at the breakpoint in the following situations:

1. Insufficient liquid in the tank.
2. When the low voltage protection function is enabled and the Level II warning is triggered.
3. Pitch or roll stick on the RC is pulled/pushed.
4. When the drone enters the RTH mode.
5. When the drone has obstacle avoidance and has detected the obstacle, which leads to an automatic brake.
6. When the location signal or heading signal is weak, the drone will automatically exit the operation mode and enter the protection mode, and record the current coordinate as the breakpoint.

Notes:

1. Any condition above is met, the drone will update the breakpoint.
2. The following actions can be set for the drone according to the operating environment after no remaining liquid: hover, raise 2m and hover, RTH and no action.

2.4.2.3. Return to The Breakpoint

The steps for returning to the breakpoint are as follows:
Step 1: Hover the drone manually in any open place and ensure there is no obstacle between this position and the breakpoint.
Step 2: Click "Return to the breakpoint " (click the AB Button or return to the Projection Point) in the Agriculture Assistant APP.
Step 3: The drone automatically rises or descends to the operating altitude and returns to the breakpoint.
Step 4: Resume the set route and continue the operation.

Notes:
For more detailed operation, please refer to the "User Manual of Agriculture Assistant APP”.

©2023 Topxgun (Nanjing) Robotics Co., Ltd. All Rights Reserved

2.4.2.4. Return to The Projection Point

If there is any obstacle on the way back to the breakpoint, you can choose “Projection Point” to return to avoid the obstacle.

Step 1: After the operation is paused, you can fly the drone manually to bypass the obstacle.

Step 2: Click “Continue” at the bottom right corner and select “Fly to Projection Point”, and you will see options 1, 2, 3 corresponding to waypoints marked 1, 2, 3 in the flight routes.

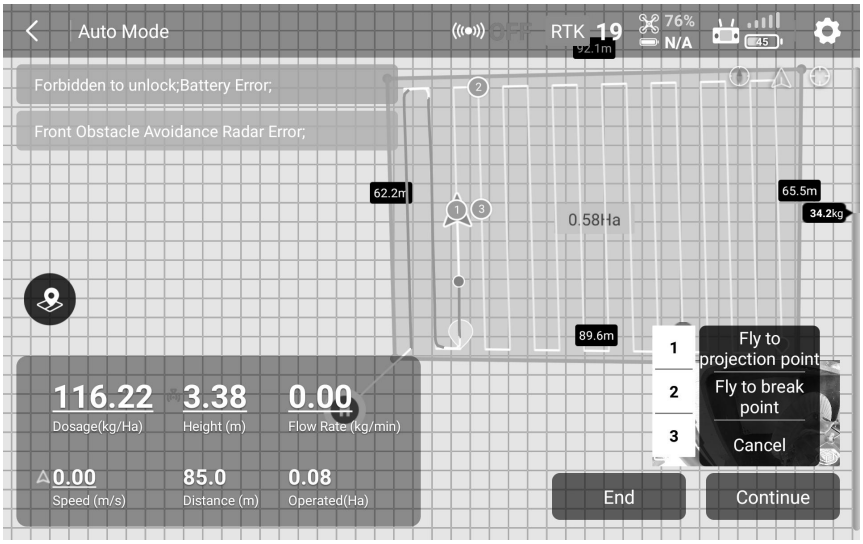

Figure 2-10

Step 3: Click on one of the points, and the drone will fly to the point to continue the operation.

2.4.3. Terrain-following

2.4.3.1. Introduction

The working range of altitude stabilization function of the terrain-following is between 1m and 10m. When the terrain-following is turned on, the relative height of the drone and the plants can be kept unchanged during the operation. The drone will fly following the terrain to ensure uniformity of the spraying.

2.4.3.2. Terrain Setting

For both plain and mountainous terrain, the drone adopts different tracking strategies and the user needs to set the simulated scene of the flight according to the actual operating terrain.

Setup procedure:

Step 1: Click ••• at the top right corner enter the setting page, then click enter the setting interface.

Step 2: According to the terrain situation, select "plain" or "mountain" on the right side of the column "Terrain Settings".

©2023 Topxgun (Nanjing) Robotics Co., Ltd. All Rights Reserved

Notes:
1 . Keep the antenna cover clean and wipe the surface regularly with a soft damp cloth depending on the frequency of use.
2 . When flying the drone over an object surface with a slope,
the correlation between simulated slope and flight speed is shown below: 10°(<2m/s), 6° (< 4m/s), and 3° (<6m/s).

2.4.4. Low Battery Level Protection

The drone has a low battery level protection function. The user can set the warning threshold, which is the battery level in percentage in the Agriculture Assistant APP. When the value is reached, the drone will act according to the setting. The action can be set as: hover, land, return, no action (only light flashing).

2.4.4.1. Level I Protection

As the Level I protection, the drone indicators flash red. The protection will be triggered after the indicators flash for 10s. The factory default Level I low power threshold is 30%, and the protective action is "no action". At the same time, the Agriculture Assistant APP sends voice notification “Level I Low Battery”.

2.4.4.2. Level II Protection

As the Level II protection, the drone indicators flash red. The protection will be triggered after the indicators flash for 10s. The factory default Level II low power threshold is 10%, and the protective action is "auto-landing". At the same time, the Agriculture Assistant APP sends voice notification “Level II Low Battery”.

Notes:
1. When Level I warning occurs, fly the drone to the safe area and land as soon as possible.
2. It is necessary to avoid the Level II warning as much as possible to avoid accidents.
3. After the low battery protection action is triggered, the drone can only be switched to attitude mode or RTH mode.
4. When the drone lands automatically, the protection mode can be quit by switching to attitude mode.

2.4.5. Lost Control Protection

2.4.5.1. Overview of Return to Home(RTH) Mode

When the GPS signal reaches the seven satellites for the first time during taking-off or flight and the signal quality is good, the drone will record the current location as the RTH point. The process of the drone returning automatically to the RTH point is called

©2023 Topxgun (Nanjing) Robotics Co., Ltd. All Rights Reserved

RTH.

2.4.5.2. Protection Logic

When the drone is in good GNSS signal, the compass work normally, and the RTH point has been successfully recorded. If the RC signal is lost for any reason during the operation, the protection action will be triggered. The protection actions include landing, hovering and RTH.

Notes:

1. When the RC is well connected, RTH can be canceled by toggling the RC switch to "S", and the drone can be controlled manually.
2. When the RC is well connected, RTH can be canceled by long-pressing the "" button for 2s.

2.4.6. Front and Rear Obstacle Avoidance

The drone is equipped with a new 77GHz millimeter wave for obstacle detection, which is unaffected by ambient light and dust. When the working conditions are met, the can detect the obstacles in front of and behind the drone. The maximum detection distance can be up to 40m. When obstacles are detected, the drone self-brake to ensure safety during the operation. The obstacle avoidance function is enabled by default and can be turned off in the Agriculture Assistant APP.

2.4.6.1. Detection Range

The detection range of the module is shown in the following figures. The vertical direction is ±15° and the horizontal direction is ±45°. If any obstacle is beyond the detection range, the module cannot detect it so the pilot should operate carefully. If an obstacle suddenly appears in the detection area, the module needs 0.6s to detect and track the movement of the target.

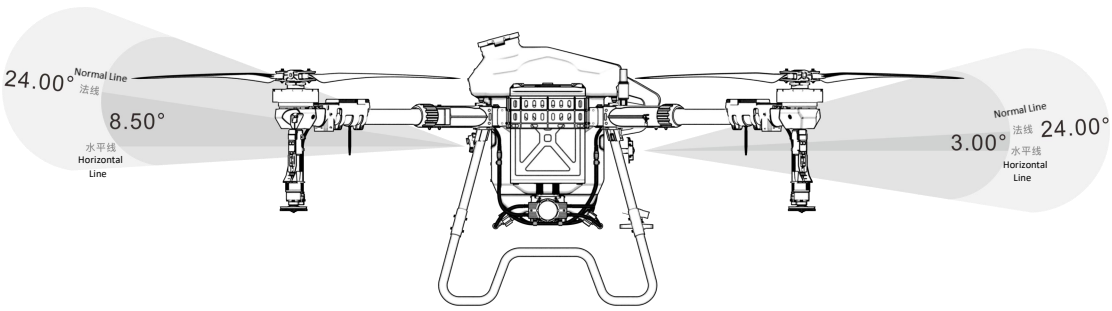

Figure 2-11 Vertical View

©2023 Topxgun (Nanjing) Robotics Co., Ltd. All Rights Reserved

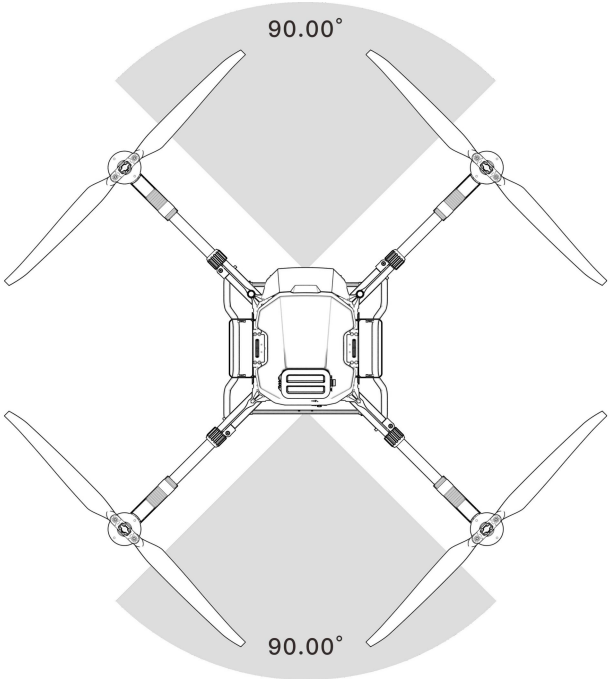

Figure 2-12 Horizontal View

2.4.6.2. Status Description

The distance between drone and the obstacle is X

Status 1	Status 2	Status 3
X≥20m	20m≥X≥8m	X<8m

Status 1: When the obstacle distance ≥20m, the drone will not brake and the APP will not display any warning.
Status 2: Entering the yellow warning zone, the drone slows down to 2m/s and maintain it. The APP will show the distance between the drone and the obstacle in the yellow zone.
Status 3: Entering the red warning zone, the drone will brake urgently and enter the Safe Mode. In the Safe Mode, the drone will remain to hover and cannot be operated to fly towards the direction of the obstacle. The APP will display the obstacle distance in the red zone. Flying the drone to the opposite direction of the obstacle will exit the safe mode.
Special Condition:
If any obstacle appears suddenly during the flight, the drone will stop with maximum braking force.

2.4.6.3. Obstacle Circumvent

Equipped with an industry-leading vehicle-level , the 3WWDZ-50B agricultural drone possesses excellent spatial awareness. When obstacles are detected in the forward or backward flight direction, it can autonomously plan a path to bypass the obstacle from the left or right without the need for manual intervention.

To activate this feature: Open the "Obstacle Circumvent" on the “Setting” page

©2023 Topxgun (Nanjing) Robotics Co., Ltd. All Rights Reserved

(default closed) in the Agriculture Assistant APP.

2.4.6.4. Notification

1. When the obstacle avoidance function is turned on, the obstacle function will not be activated if the drone is in "S" flight mode or the drone is landing.
2. After the obstacle avoidance function is turned on, to ensure sufficient braking distance, the maximum flying speed is 8m/s.
3. The obstacles can not be detected when the vertical FOV is greater than 15°or less than -15°.
4. If the front obstacle distance is less than 8m, the drone will be braked immediately and enter Safe Mode. The drone cannot be controlled to fly forward or turn left/right. The restriction can be released when toggling the stick in the opposite direction.
5. The obstacle avoidance function will not be activated during taking-off, landing or line changing.
6. When the obstacle disappears, the drone will be in the protection mode for 2s, after which it will gradually lift the speed limit.

2.4.6.5. Description of Typical Obstacle Avoidance Scenarios

Trees, Poles: obstacle avoidance can detect the obstacle within 25m, and continuously show warning with the distance. When the distance is less than 20m, the drone will brake automatically to ensure safety.
Wires: Taking the 1.5cm-diameter wire as an example, as the reflection of the wire is poor, the is able to detect the wire 13m away while the drone is flying right towards the wire at a speed of 3m/s. The thinner the wire or the higher the flight speed is, the poorer the obstacle avoidance effect will be.

Notes:
1. When using the module, follow the local radio regulations and legal requirements.
2. For obstacles of different sizes and materials, the effective working range of the module will vary. For example, when detecting pedestrian, power cables, dry branches or conifers, the effective detection distance will decrease. Please operate carefully.
3. modules are suitable for flat terrain and may cause false alarms when the slop angle is large.
4. When the surface beneath the drone is less than 1.5m, it is prone to cause false alarms.
5. Never disassemble the module by yourself. Otherwise, the improper installation might cause malfunction of the
6. Do not crush or squeeze the housing of the module.

   performance might decrease by 10-20%.

©2023 Topxgun (Nanjing) Robotics Co., Ltd. All Rights Reserved

3. Maintenance and Common Troubleshooting

3.1. RC Maintenance & Precaution

- The RC needs to be wiped regularly to keep it clean. Keep the RC from water, agrochemical and dust.
- Please fold the antenna after use to avoid damage.
- If the drone cannot hover and keeps flying in one direction when the control stick is at the neutral position, the control stick of the RC needs to be calibrated.

3.2. Drone Maintenance & Precaution

- Delicate electronic components are inside the drone. Do not soak the drone in water when cleaning.
- Regular inspection of components is required. Make sure the screws are fastened at all the joints.
- During transportation, make sure to properly fold the arms so that the motor base is placed on the folding structure.
- If the structural parts (such as frames, arms, landing gears) are damaged, please contact the after-sales service for replacement.

3.3. Motor Maintenance & Precaution

The working environment of agricultural plant protection drones' motor is harsh. Water mist, liquid and agrochemical residue are the main factors causing damage. Therefore, it is necessary to:

- Clean the housing of the motor with a warm cloth after the operation. Remove the residue on the surface, and do not flush the inside of the motor with high-pressure water. Prevent water from leaking into the motor, which will shorten the service life.
- Check the motor regularly. When the resistance of the motor is high, the sound is abnormal or the gap between the motor and the motor base becomes large, please contact after-sales immediately and maintain according to the instructions by the after-sales.

3.4. Propeller Maintenance & Precaution

- If the propeller cracks or is damaged, please replace it in time. Otherwise, it will not have enough lifting power and the drone will be unstable, which will cause safety problems.
- Pay attention to the marking on the propellers when installing them. Motor No.1 and No.3 should match "CCW" propellers, and motor No.2 and No.4 should match "CW" propellers.
- Clean up agrochemical residues after finishing the operation.

©2023 Topxgun (Nanjing) Robotics Co., Ltd. All Rights Reserved

- Insert the propeller into the propeller holder during transportation.

3.5. Battery Maintenance & Precaution

3.5.1. UPS

3.5.1.1. Specification Parameters

No.	Project	Specification Parameters
1	Cell Type	Rechargeable Lithium-Ion Battery
2	Individual Cell Voltage	3.7V
3	Capacity	2500mAh
4	Discharge	-20°C - 55°C
5	Charge	0°C - 45°C
6	Storage (Within 3 Months)	-5°C - 35°C

3.5.1.2. Notes

- When the agricultural drone is not used for a period of time, please connect the drone to the battery once a month for no less than 20min, in order to prevent the battery from discharging.
- Do not disassemble the battery.
- It is strictly forbidden to throw the battery into the fire, otherwise, it may explode.
- Batteries should not be immersed in liquids such as freshwater, seawater, beverages, etc.
- Using damaged batteries are prohibited.

3.5.2. Battery

- Charge in the slow charging mode regularly to balance the battery voltage.
- Avoid charging at a temperature of above 45 °C.
- If the battery falls from height, it might cause a short circuit or even combustion.
- Make sure the battery is firmly connected to the drone, otherwise it may affect the performance of the drone.
- If corrosion or discoloration is found in the battery plug of the drone, wipe it with absolute alcohol in time and contact the after-sales department and follow the instructions.
- Do not use batteries which have dents, scratches and deformation on the surface. Serious mechanical damage may lead to the risk of short circuits or combustion.
- Make sure all wires are not damaged. Severely damaged wires may cause short circuits or combustion.

©2023 Topxgun (Nanjing) Robotics Co., Ltd. All Rights Reserved

Storage Instructions:

- For storage of a large number of batteries, it is recommended to keep 30cm between each storage unit.
- Please avoid direct sunlight for more than 10min under any storage condition.
- Battery storage environment should be maintained at room temperature (15°C - 35°C). Long-term storage above 35°C will accelerate the aging of the battery. Long-term storage at 0°C - 15°C may shorten the service time, but after several times of use at room temperature, the normal condition can be restored.
- Battery storage should avoid a humid environment. Keep storage environment dry and not ventilated.
- Battery storage locations should not be places where large items are often moved in and out to prevent accidental collisions.

Transportation Instruction:

- It is recommended to use a temperature-resistant or flame-retardant box with a cover to store batteries. It is recommended to use the shockproof and tilt-proof sponge in the original box in other packages.
- Avoid putting the charging and discharging cables on the edge of the box to prevent accidentally being crushed, otherwise, it will lead to a short circuit when being used.
- During the operation, if the batteries are placed in a vehicle, ventilation should be guaranteed and avoid direct sunlight. The place exposed to direct sunlight in a sealed vehicle may have a temperature of above 80°C, which may cause the battery to burn.

Emergency Instructions:

Adequate sand, fire extinguishers, and heat-insulating gloves should be prepared in places where batteries are stored, transported, or used.

When smoking and burning of batteries are found, the following measures should be taken immediately:

1. Battery is just starting to smoke (or has a burnt odor): Determine the part where a short circuit happens immediately. Lift the battery handle or charge-discharge cable (with heat-insulating gloves if necessary) and quickly drag the battery into the open room or outdoor. Completely bury the whole battery with sand (the charge-discharge cable needs to be buried in if there is smoking). Be careful to wait until the battery has completely cooled down before taking it out (otherwise the battery may continue to smoke).
2. Batteries emit heavy smoke: immediately use sand and fire extinguishers to extinguish or bury the burning batteries while relocate the surrounding batteries and other flammable objects. If the surrounding flammable and explosive objects (liquids) cannot be removed, immediately use large quantities of water for rapid fire extinguishing and cooling.
3. Batteries are on fire: immediately use a large amount of water, fire extinguishers and sands to extinguish the fire (disconnect the power supply of surrounding electrical

©2023 Topxgun (Nanjing) Robotics Co., Ltd. All Rights Reserved

equipment first) while removing the surrounding batteries and other flammable material.

Notes:
When using fire fighting equipment to extinguish fire, strictly follow the requirements and specifications of the local Fire Fighting authorities.

3.6. Plug Maintenance & Considerations

- The plug must be inserted completely when it is connected, otherwise, it will heat the plug and affect flight.
- The power plug and battery plug should be replaced if they have turned black or sparked.

3.7. Spray System Maintenance & Considerations

- Fill the water tank, pipe and nozzle with clean water to clean them when the operation is finished.
- Avoid mixing herbicides and pesticides, otherwise, it will be harmful to plants.
- In the case of long-term storage or transportation of the drone, always empty the tank.
- It is forbidden to run the water pump at high speed on an empty tank for long time.
- Avoid using powders and high-concentration emulsifiers to avoid blocking the spray pipe.

4. Transportation Instructions

Packaging method:

The drone will be placed in the package box with flexible supporting material embedded in the package box while shipping.

Package Size: 1083mm*1083mm*905mm as shown below.

©2023 Topxgun (Nanjing) Robotics Co., Ltd. All Rights Reserved

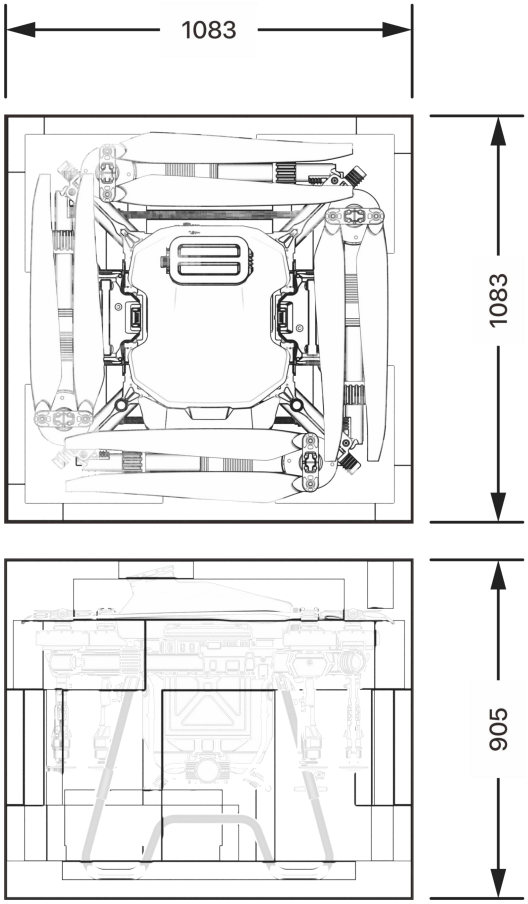

Figure 4-1

5. Hazards and Safety Checklist and Countermeasures

No.	Hazard	Countermeasures
1	Foldable Structure	When folding or unfolding the drone, be aware of the hand pinch hazard sign and keep your fingers away from the folding structure.
2	High-speed Rotating Propeller	Keep a safe distance from the drone and keep it away from people, animals or other obstacles during operation.
3	Charger While Being Charged	Place in a dedicated charging area and environment. Ensure good ventilation. When the charger is connected to power, make sure the charger is grounded.
4	Tank	Flush it with clean water after use and cover it with the lid, and store in a safe place.
5	Battery	The maximum voltage is up to 51.8V. Please use in strict accordance with the relevant safety regulations and the instructions of the battery, and pay attention to safety.
6	Agrochemical	When handling agrochemical, pay attention to the risk of different kinds of agrochemical. Fully understand the using methods in advance.
7	During the Operation	Do not operate in bad weather, such as strong wind (wind

©2023 Topxgun (Nanjing) Robotics Co., Ltd. All Rights Reserved

		speed 8m/s or above), heavy rain (rainfall 25 mm/12 hours or above), snow, fog, etc.

6. Manufacturer Information

Manufacturer: Topxgun (Nanjing) Robotics Co., Ltd.

Address: No.8 Building, Jiangsu Software Park, No.1 Dongji Avenue, Jiangning District, Nanjing, China

Email: sales.global@topxgun.com

Website: www.topxgunag.com

7. Appendix

7.1. Specification Parameters

Specification	Parameter
Package	
Package Size	1100*1100*930mm (Including peripheral waterproof film)
Net Weight	39.7kg
Gross Weight	54.8kg
Body Frame	
Symmetrical Motor Wheelbase	2200mm
Arm Length	850mm
Spraying Mode	
Dimension (Folded State)	948*919*840mm
Dimension (Unfolded State)	2960*1705*840mm (With unfolded propellers)
Dimension (Unfolded State)	1705*1695*840mm (Without propellers and nozzle, antenna included)
Spreading Mode	
Dimension (Folded State)	948*919*855mm
Dimension (Unfolded State)	2960*1705*855mm (With unfolded propellers)
Dimension (Unfolded State)	1705*1695*855mm (Without propellers and nozzle, antenna included)
Power Motor	

©2023 Topxgun (Nanjing) Robotics Co., Ltd. All Rights Reserved

Model	X60
Stator Dimensions	136x30mm
KV	68 RPM/V
Power	10kW (Single motor)
Maximum Thrust	54kg (Single motor)
Weight	1905g (Single motor excluding propeller components, motor base, including power connectors)
Number of motors	4
Power ESC	
Rated Working Current	77A
Operating Voltage	51.8V (14S LiPo)
Rated Power	4000W
Foldable Propeller	
Material	Nylon Carbon Fiber Composite Material
Diameter	56inch, 1423mm
Pitch	20inch
Weight	925g (Including propeller clamp components)
Spraying System	
Tank	
Rated Capacity	50L
Weight	6.2kg (Including liquid pump and other accessories)
Pump	
Pump Type	Metering peristaltic pump
Number of Channels	2
Maximum Flow Rate	10L/min (Single pump)
Measurement Error	< 5%
Centrifugal Nozzle	
Rated Voltage	51.8V
Protection Level	IP67
Maximum Speed of Centrifugal Disc	11000rpm

©2023 Topxgun (Nanjing) Robotics Co., Ltd. All Rights Reserved

Maximum Atomization Capacity	5L/min (Single nozzle)
Spray Range	6 - 10m
Recommended Spray Range	8m
Recommended Operating Temperature	0°C - 40°C
Atomization Particle Size	50μm - 500μm
Spreading System SP-5 (Optional)	
Tank Capacity	76L
Maximum Payload	50kg
Weight	6.7kg (Including the tank, spreader and other components)
Feeding Mode	Ration by rolling feeder
Spreading Mode	Centrifugal disc spreading mode
Spread Range	5 - 8m
Recommended Operating Temperature	0°C - 40°C
Package Size	840*580*480mm
Spreading System SP-4 (Optional)	
Tank Capacity	76L
Maximum Payload	50kg
Weight	6.5kg (Including the tank, spreader and other components)
Feeding Mode	Ration by rolling feeder
Spreading Mode	Adjustable air jet spreading mode
Spread Range	5 - 7m
Recommended Operating Temperature	0°C - 40°C
Package Size	830x460x555mm

©2023 Topxgun (Nanjing) Robotics Co., Ltd. All Rights Reserved

Obstacle Avoidance	
Detection Range	1-40m
Using Condition	Flight relative altitude >2m and flight speed <7m/s
Safe Distance	4m
Avoidance Direction	Front and rear
Autonomous Obstacle Avoidance	Supported, autonomously avoids obstacles to the left or right.
Protection Level	IP67
FPV Camera	
FOV	Horizontal 140°, Vertical 87°
Resolution Ratio	720P
Flight Parameter	
Drone Weight (With Battery)	53.7kg (Spraying mode) 53.8kg (Spreading mode)
Rated Take Off Weight	103.7kg (Spraying mode) 103.8kg(Spreading mode)
Maximum Take Off Weight	< 150kg
Hover Precision (GNSS signal properly)	Horizontal ± 1.0m Vertical ± 0.5m
	Horizontal ± 10cm Vertical ± 10cm (RTK enabled)
	Vertical ± 0.1m enabled)
Hover Time*	≥7.5min (Take-off weight 103.7kg & Two 20Ah batteries) ≥19min (Take-off weight 53.7kg & Two 20Ah batteries)
*The hover time is measured near sea level, when the wind speed is less than 3m/s, and the ambient temperature is 25°C.	
Maximum Flight Speed	10m/s
Distance Limit	1000m
Maximum Take-off Altitude	3000m
Recommended Operating Ambient Temperature	0 - 40°C
Flight Control System	
Model	TIA2024
Input Voltage	30 - 60.9V
Rated Power	20W (Excluding peripherals such as , water

©2023 Topxgun (Nanjing) Robotics Co., Ltd. All Rights Reserved

	pump, etc.)
Working Temperature	-10°C - 60°C
Interface Type	CANBus, RS485, PWM, USB, etc.
Supported Multi-rotor Aircraft Types	Four rotors, six rotors, eight rotors (configurable)
Protective Function	Low voltage protection, lost control protection, no-fly zone protection, etc.
Remote Controller	
Model	TC2S
Operating Frequency	2.400-2.4833GHz
Signal Effective Distance (no interference, no obstruction)	Maximum communication distance: 10km; image transmission distance: 3km (plant protection environment)
RTK High Accuracy Mapping	Support
Mapping Accuracy	RTK enabled (fixed solution): Horizontal: ±0.1m; Vertical: ±0.1m
Screen Size	7 inch
Battery Voltage	3.7V (Rechargeable lithium battery)
Battery Capacity	20000mAh
Battery Life	6-8h
Weight	1120g
Size	280x195x101mm
GNSS System	
Frequency	BDS: B1/B2; GPS: L1/L2; GLONASS: L1/L2;
Hover Accuracy (RMS)	RTK not enabled: horizontal: ±0.6m, vertical ±0.3 m
	RTK enabled (fixed solution): horizontal: ±0.1m, vertical: ±0.1m
Orientation Accuracy (RMS)	0.4°
Charger (TC9002P)	
Input Power	AC 220V - 240V
Input Voltage Frequency	50/60Hz
Output Power	DC 61.0V (Max)
Output Current	165A (Max)
Output Power	9000W (Max)

©2023 Topxgun (Nanjing) Robotics Co., Ltd. All Rights Reserved

Channel	Dual Channel
Net Weight	20kg
Gross Weight	22kg
Size	430*320*300mm
Package Size	480*370*350mm
Battery (TB1430)	
Voltage	53.2V
Capacity	20000mAh
Discharge Rate	8C
Charge Rate	5C
Protection Level	IP56 (With batteries installed to the drone)
Battery Life Time	1000 cycles (Capacity will be attenuated, no limit to use)
Weight	8.0kg (With 2 batteries installed during flight)
Size	139*240*316mm

©2023 Topxgun (Nanjing) Robotics Co., Ltd. All Rights Reserved

FCC STATEMENT :

This device complies with Part 15 of the FCC Rules. Operation is subject to the following two conditions:
(1) This device may not cause harmful interference, and
(2) This device must accept any interference received, including interference that may cause undesired operation.
Warning: Changes or modifications not expressly approved by the party responsible for compliance could void the user's authority to operate the equipment.

NOTE: This equipment has been tested and found to comply with the limits for a Class B digital device, pursuant to Part 15 of the FCC Rules. These limits are designed to provide reasonable protection against harmful interference in a residential installation. This equipment generates uses and can radiate radio frequency energy and, if not installed and used in accordance with the instructions, may cause harmful interference to radio communications. However, there is no guarantee that interference will not occur in a particular installation. If this equipment does cause harmful interference to radio or television reception, which can be determined by turning the equipment off and on, the user is encouraged to try to correct the interference by one or more of the following measures:

Reorient or relocate the receiving antenna.

Increase the separation between the equipment and receiver.

Connect the equipment into an outlet on a circuit different from that to which the receiver is connected.

Consult the dealer or an experienced radio/TV technician for help.

FCC Radiation Exposure Statement:

This equipment complies with FCC radiation exposure limits set forth for an uncontrolled environment. This equipment should be installed and operated with minimum distance 20cm between the radiator & your body.