3WWDZ-U60B

Agriculture Drone

User Manual V0.3

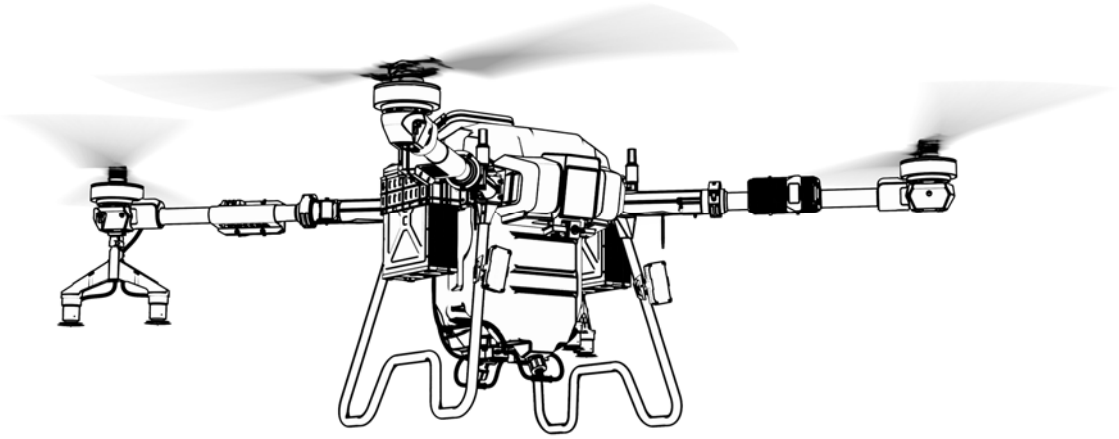

Topxgun (Nanjing) Robotics Co., Ltd.

2024.11

Usage Recommendation

Topxgun provides user with the following documents:

1. Packing List
2. 3WWDZ-U60B Agriculture Drone User Manual
3. Agriculture Assistant APP User Manual

For detailed usage and functions, please refer to “3WWDZ-U60B Agriculture Drone User Manual" and "Agriculture Assistant APP User Manual”. You can also follow us on YouTube Channel for tutorials and tips in the operation.

* To keep you updated, some documents may be taken as E-documents.

Agriculture Assistant APP

Topxgun Official Website

Preface

The 3WWDZ-U60B agricultural drone is a mature multi-rotor UAV, leading the industry in terms of function, appearance, control, safety and other aspects. There are certain usage risks of multi-rotor drones due to the mechanism and structure. Please strictly follow the safety tips and user manual during the operation. Improper use of this product may result in direct or indirect losses and injuries.

Disclaimer

Please read the manual carefully before using the aircraft. Once the drone is used, it is deemed to be an acknowledgement and acceptance of all the content of this user manual. This drone is suitable for people 18 years of age and older. Topxgun is not responsible for the loss of personal or property due to the following problems:

1. The user does not assemble or use the drone as required by this manual.
2. The user operates the drone in poor physical or mental conditions such as drinking, drug abuse, fatigue, etc.
3. The user actively or intentionally operates the drone to create damage.
4. The user modifies the drone without using the accessories from Topxgun, which causes malfunction of the drone.
5. Injury caused by the user's misoperation or subjective misjudgment.
6. Damage caused by natural causes, such as aging of the circuit and so on that affects the aircraft.
7. Damage caused by the user’s operation of the drone while knowing that it is in an abnormal working condition.
8. The user still operates the drone under severe weather conditions such as typhoons, hail and fog.
9. The user operates the drone in the magnetic interference area, radio interference area and government no-fly area.
10. The user operates the drone in case of poor visibility and occlusion of the line of sight.

11. The user operates the drone to cause the infringements by obtaining any data, image data and other infringement behaviors.

12. Other losses that are not within the scope of the company's liability.

Safety Operation Introduction

1. Pesticide Usage

- Wear protective clothing to prevent direct body contact with the pesticide while operating.
- Avoid the use of powder pesticides as much as possible or else they may reduce the service life of the spraying system.
- Use clean water to prepare the pesticide to avoid blocking the strainer. Do not remove any filter and clear any blockages before using the equipment.
- After using the pesticide, please clean up the residual liquid in time. It is strictly forbidden to pollute the river and drinking water source and ensure that it will not cause harm or impact on people, animals and the environment in the surroundings.
- The effect of the pesticide is closely related to the concentration of the pesticide, the spraying rate, the altitude of the drone from crops, the wind direction, the wind speed, etc. The above factors should be taken into account comprehensively when using the pesticide in order to achieve the best effect.
- Strictly follow the safety instructions of the pesticide production company.
- Particular working fluids are prohibited.
- During operations, pay attention to factorssuch as wind direction and pesticide toxicity, to prevent pesticide damage to adjacent plots due to mist drift.

2. Usage Environment

- Always fly in an open space, away from the crowd.
- Always operate the drone during daylight hours only.
- It is recommended to fly at an altitude of no more than 120 meters above ground level or your takeoff point.
- It should fly in an environment with a temperature between 0°C and 40°C.
- It is recommended to fly in an environment with a wind speed below level 4.
- It is strictly forbidden to fly in rain, fog, snow or other extreme weather.
- It is strictly forbidden to fly indoors.
- It must fly in a legal area. Before flying in the legal area, please consult your local flight management department to comply with local laws and regulations.

3. Pre-operation Inspection

- Make sure that every device is fully charged.
- Make sure that all parts are in good condition. If there are some parts worn or
- damaged, please replace them before the flight. Make sure that the landing gear
- and the tank are tightly mounted and all the screws are firmly tightened.
- Make sure that the propellers are intact and firmly mounted, the propellers and
- arms are fully extended, and the screws are tightened.
- Make sure the motors are clean and free of damage.
- Make sure the spraying system is free of blockage and works properly.
- Please calibrate the compass before the flight.
- Ensure that the Remote ID function is operating normally

4. Operation

- Keep away from the rotating propellers and motors.
- When folding the drone, avoid crushing and damaging the drone parts.
- Do not exceed the take-off weight of 104.7 Kg to avoid danger.
- Pilots must be professionally trained and pass the assessment, and the untrained personnel must not fly the drone.
- Make sure that the propellers are removed before calibrating the drone and upgrading the firmware.
- When the drone and the remote controller are in the frequency-connecting process, make sure that the propellers are removed and that people and animals are far away from the motor.
- A pilot should not operate this product under the influence of alcohol, fatigue, illness, etc.
- If the operating environment does not meet the working condition of the, the drone will not avoid obstacles when it returns automatically. If the remote-control signal is normal, the flight speed and altitude can be controlled using the remote controller.
- When working, be sure to turn on the remote controller first, and then turn on the power supply. After landing, turn off the power supply first and then turn off the remote controller.
- Please maintain control of the drone throughout the process and do not rely entirely on

the information provided by the hand-held ground station(remote controller).

- Obstacle avoidance and terrain following functions will not be available in the specific flight mode or environment. Please observe the attitude of the drone at all times and judge the flight condition reasonably to avoid obstacles in time.

5. Flight Restrictions and Local Laws

The maximum control flight altitude is 20 meters in China. Regulations may differ in each country, please consult the local flight management department before taking off, to comply with local laws and regulations.

Special Note： Safety operation instruction notes include but are not limited to the above items

Intellectual Property Rights

The intellectual property rights of this product and its manual belong to Topxgun Robotics Co., Ltd. Without written permission, any organization or individual may not copy, reproduce or distribute them in any form. If the quotation is required, the source should be indicated and the manual should not be modified, deleted or quoted contrary to its original intention.

About this Manual

This manual is used as a user's guide. Photos, graphics, charts and illustrations in the manual are only for explanatory and illustrative purposes and may differ from the actual product. Please refer to the actual product.

Due to product upgrades or other reasons, the content of this document will be updated from time to time. Unless otherwise agreed, it is without further notice.

Before using this product, please read this manual carefully.

Execution standard of this product: Q/TG_002-2023

All rights reserved by Topxgun (Nanjing) Robotics Co., Ltd

Content

Disclaimer 1
Safety Operation Introduction 3
1. Product Overview 8
1.1. Remote Control 8
1.2. Smart Battery Introduction 16
1.3. Charger（TC9002P） 20
1.4. Spreader (Optional) 27
1.5. Drone Introduction 36
2. Flight 42
2.1. Flight Instruction 42
2.2. Indicator Description 45
2.3. Operation 46
2.4. Function Introduction 51
3. Maintenance and Common Troubleshooting 61
3.1. RC Maintenance & Precaution 61
3.2. Drone Maintenance & Precaution 61
3.3. Motor Maintenance & Precaution 61
3.4. Propeller Maintenance & Precaution 62
3.5. Battery Maintenance & Precaution 62
3.6. Plug Maintenance & Precaution 65
3.7. Spray System Maintenance & Precaution 65
4. Transportation Instructions 65
5. Hazards and Safety Checklist and Countermeasures 66

6. Manufacturer Information.....67

7. Appendix.....67

7.1. Specification Parameters.....67

1. Product Overview

3WWDZ-U60B agriculture drone has undergone several iterations of upgrades, and now reaches the leading level in practicability, reliability and safety. The drone is full-body waterproof, dust-proof and anti-corrosion. Some key modules, such as spraying system, and power system, are IP67 rated ensuring easy cleaning and maintenance. The GNSS+RTK positioning system can achieve centimeter-level high precision positioning, and also supports dual antenna anti-magnetic interference direction-finding technology. The drone is equipped with wide-angle FPV camera and high-definition digital image transmission system. Users can observe the environment in real time.

1.1. Remote Control

1.1.1. Antenna Placement

The antenna of the RC adopts a foldable design, and the signal strength varies with the positions of the antenna. It is recommended to keep the antenna vertical to the ground when you control the drone. In this case, the signal is the strongest. The position or distance between the RC and the drone is adjusted in time to ensure that the drone is always in the optimal communication range. Therefore, the antenna of the RC should not point to the drone during the flight. The recommended operation is shown in Figure 1-4.

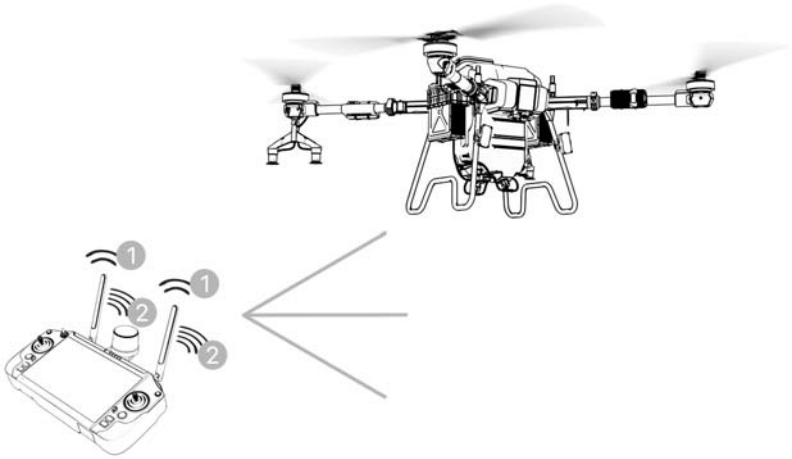

1-1 Signal Strength of the RC

1、Weak signal　　2、Strong signal

Special Note： Do not fold the antenna during the flight to avoid obstruction between the RC and the drone, otherwise, the signal quality will be seriously reduced.

1.1.2. Component Definition

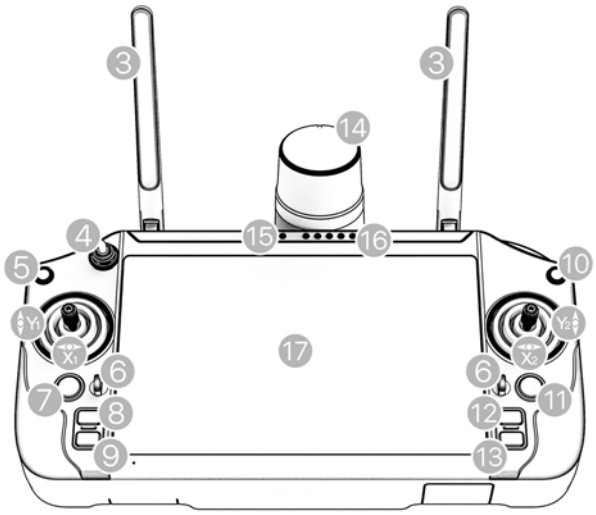

1-2

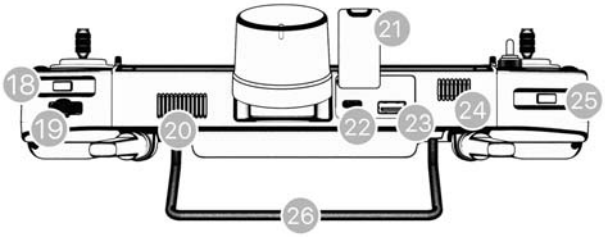

1-3

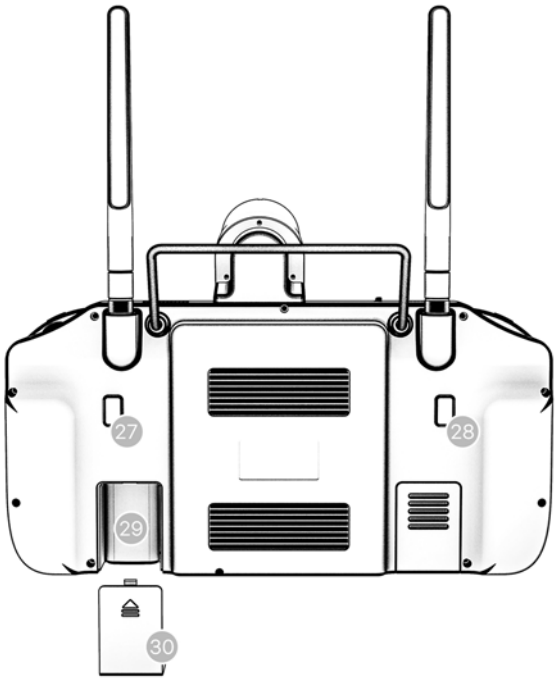

1-4

The Main Control Buttons of the Remote Control (American Mode)			
No.	**Component**	**Corresponding Function**	**Function Description**
Y1	Throttle	Left stick - up and down	The drone moves vertically (up and down)
X1	Yaw	Left stick - left and right	The drone rotates(left and right)
X2	Roll	Right stick - left and right	Fly left and right
Y2	Pitch	Right stick - up and down	Fly forward and backward
3	Antenna	Primary and auxiliary antenna	Transit the control signal,telemetry signal, telegraphic signal
4	Switch Mode Button	Toggle the switch	Switch between GPS mode and Operation mode (Turn off by default, you can turn on in Setting)
5	Return Button	Return to the previous section	Return to the previous section in the Agriculture Assistant APP
6	Hanging Holes		For lanyard attachment
7	RTH (Return-to-home) Button	Long press for 2s, the Drone will return home	Long press the RTH button to activate the smart return mode
8	L1	Customizable Button	Default to rudder switch button
9	L2	Customizable Button	Default to obstacle avoidance switch button
10	Emergency Stop	Long press for 5s to lock the drone	Press for 5s to lock the drone in case of emergency
11	Power Button	Long press 3 seconds to turn on or turn off the RC	Long press to turn the RC on/off. When the RC is on, a short press can be used to turn the

			screen on/off
12	R1	Functional button in APP	Adapt to the function buttons on the lower right corner of the APP (for example, continue operation, end operation, previous step, next step, etc.)
13	R2	Functional button in APP	Adapt to the function buttons on the lower right corner of the APP (for example, continue operation, end operation, previous step, next step, etc. Special support for long press 3 seconds, equivalent to sliding unlock function)
14	RTK Point Maker	Mark the point with RC	High-precision RTK point marking
15	Status Indicator	Remote control status indication	Refer to the “Indicator Status” chapter
16	Battery Indicator	Remote control battery level	Indicate the power level of the remote control
17	HD Touchable Display Screen	For interface display and touch selection	Operate the drone and display the drone status
18	FPV Switch Button	Switch between the FPV camera and the full-screen map	
19	Centering wheel	Toggle the corresponding signal output of regulation	Supported only for industry applications
20	Air outlet	Remote control air outlet	Do not cover the air outlet of the RC when using
21	Sealing Cover	Protect RC interface	
22	Type-C Interface	Remote control charging and upgrading interface	Please use the specified charger
23	USB Interface	For external USB devices	
24	Heat Dissipation Outlet	Remote control heat dissipation outlet	Do not cover it when using
25	Spray Button	Turn on/off the pump	Turn on/off the pump in the manual mode
26	Handle	Convenient for users to hold and carry	
27	Customizable Button	Record the Point B in AB Point Mode by default; Change to the right line by default in the Manual+ Mode	Customizable
28	Customizable Button	Record the Point A in AB Point Mode by default; Change to the right line by default in the Manual+	Customizable

		Mode	
29	Wireless Network Card Slot	For installing an external wireless network card	
30	Wireless Network Card Slot Cover	Protect the wireless network card	

1.1.3. Indicator Status

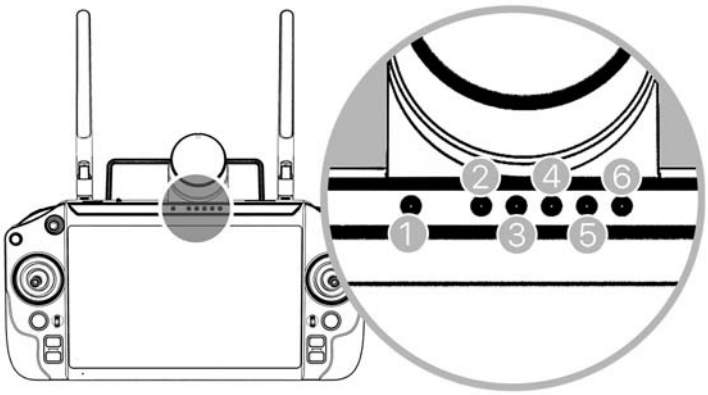

1-5 Indicator Status

The RC status indicator shows the status of the RC. The indicator will give priority to link status and warning messages.

Details are shown in the table below:

Indicator Status	RC Status	On/Off Status
Red light always on	RC is not connected to the drone	On
Green light always on	RC is connected to the drone properly	On
Cyan light flashes	RC is matching frequency	On
Green light flashes	RC temperature is too high	On
Red light flashes	RC battery is low	On
Blue light flashes	The joystick is not in the middle position	On

Red light always on	Charging when the battery level is less than 10%	Off
Yellow light always on	Charging when the battery level is between 10% and 90%	Off
Green light always on	Charging when the battery level is over than 90%	Off

1.1.4. Charging

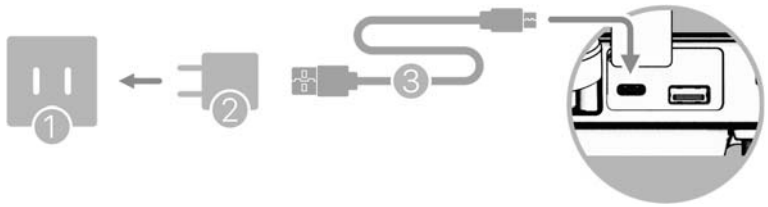

Figure 1-6

1、AC power supply 100-240V　　2、USB charger　　3、USB-C cable

Special Note：

1. Please use the Type-C interface to charge the RC.
2. Fully charged for about 4h with the designated quick charger.
3. Please use the official charger when charging the RC. If not, it is recommended to use an FCC/CE-compliant, 5V 2A charger or a 9V 3A fast charger that complies with the QC2.0 protocol.
4. To ensure the best condition of the RC battery, please make sure to fully charge the RC every 3 months.
5. If the RC is found to have a peculiar smell, smoke or liquid leakage, etc., stop charging and send it back for inspection and identification in time.
6. Do not charge the RC when the ambient temperature exceeds 60°C.
7. Keep the RC away from infants' and toddlers' reach while charging. It is recommended not to leave it unattended.

1.1.5. Frequency matching procedures

If the user purchases the drone as a whole set, the RC transmitter and the drone have

been frequency-paired before dispatching and can be used directly after power-on. In other cases, use the following methods to match the frequency:

1. Turn on the RC parameter adjustment assistant, as shown below

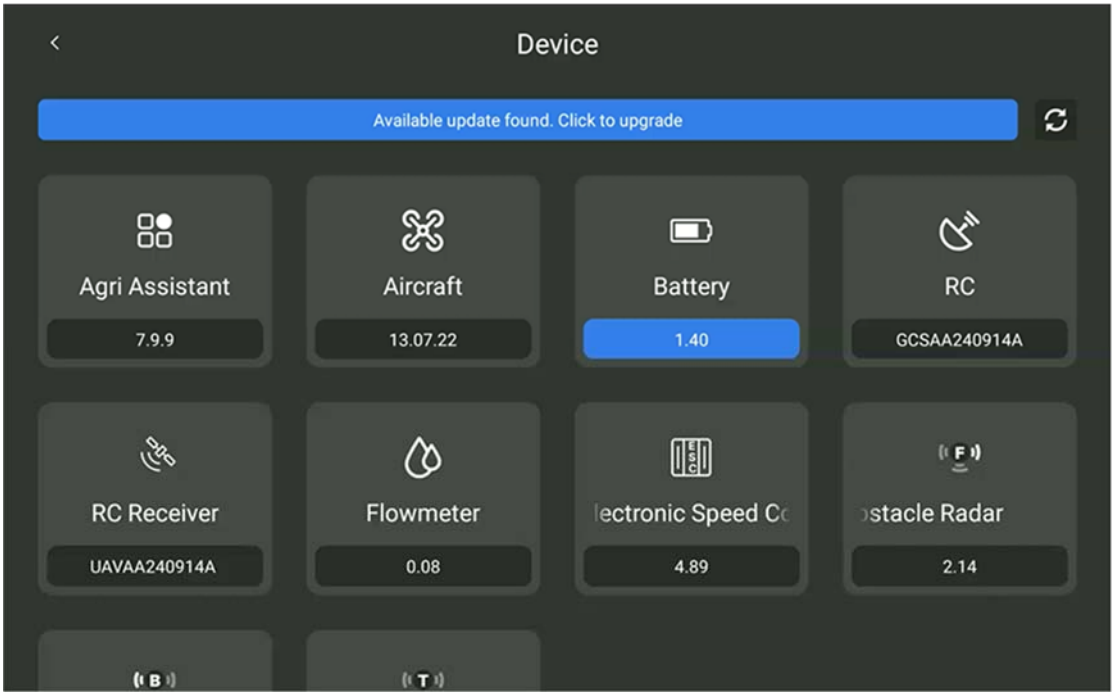

1-7

2. Click the “Linking” button, the indicator light of the RC will be flashing cyan. APP shows a pop-up of “frequency pairing” and there is a 30s time limit to turn on the RC

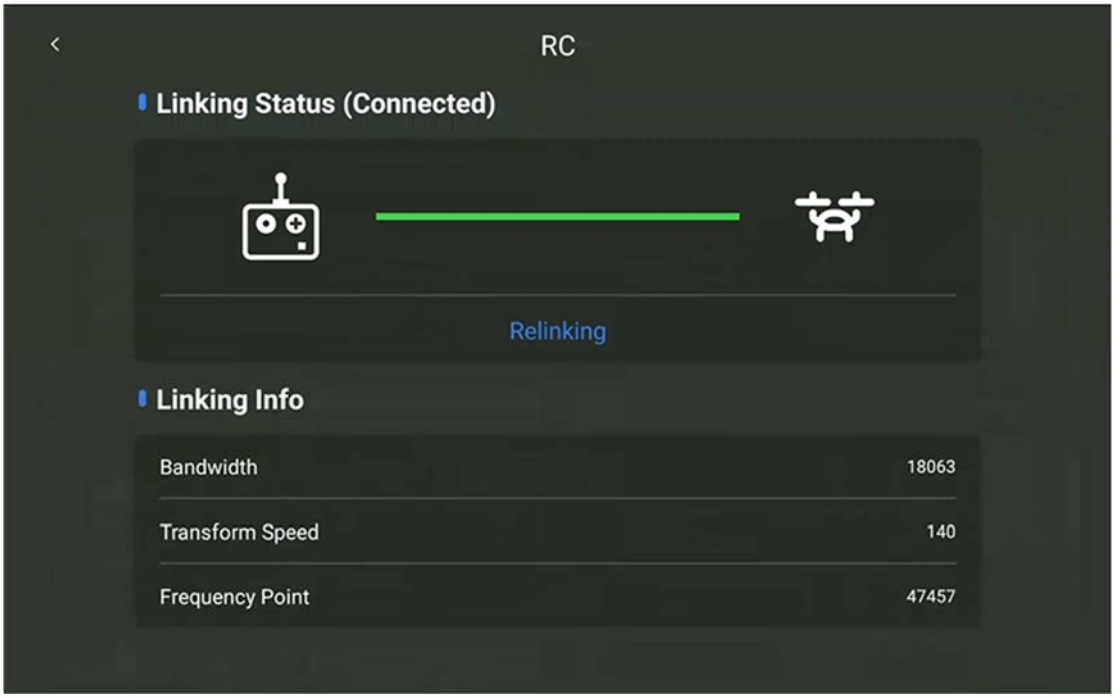

1-8

3. Long press the power button for 5 seconds until you hear a beep. “Pairing Succeed” will be shown on the APP interface. The RC indicator will be solid green. If you haven’t press the pairing button in 30 seconds, the pairing will be failed.

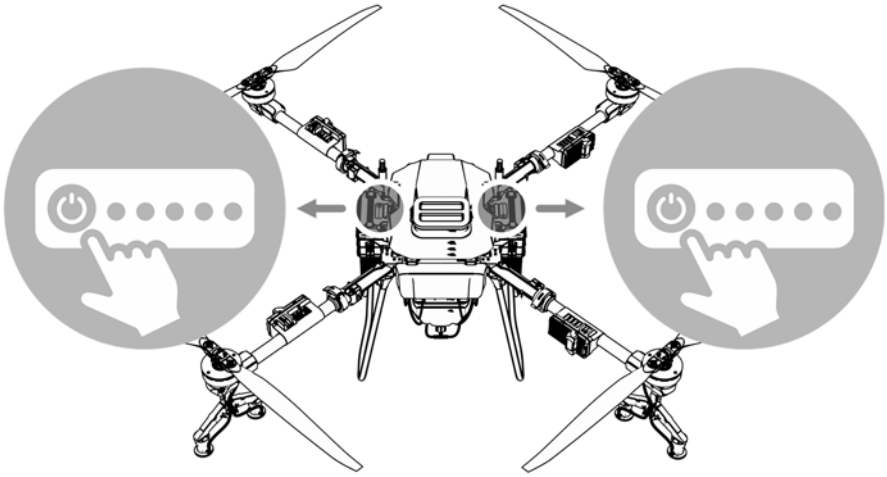

1-9

Special Notes：

1. Keep the distance between the RC and the receiver within 1m while pairing.

2. Ensure the propeller is removed from the drone during frequency pairing, and keep a safe distance from drone motors.

1.1.6. Specification Parameters

RC Data link	
Transmission Frequency Range	2.400-2.4835GHz
Signal Effective Distance (Outdoor, no obstruction, no interference	Maximum communication distance 10km, 3km image transmission (plant protection scenario)
Interference Recovery	<1s
Antenna Type	Omnidirectional antenna (2.5dBi)
Wi-Fi	
Protocol	IEEE 802.11a/n/ac, Wi-Fi compliant
Frequency	4.900 GHz ~ 5.845 GHz (5.0 GHz ISM Band)
Bluetooth	

Protocol Standard	Bluetooth 4.2
Frequency	2.400-2.4835GHz
FPV Camera	
Pixel	2 million
View Angle	Horizontal 86° Vertical 52°
Video Resolution	720p
Display	
Screen Size	7 inch
Touching Mode	Capacitive
Screen Resolution	1920x1200
Other Parameters	
System	Android
Operating Temperature	-15℃~40℃
Storage Temperature	-25℃~60℃
Charging Environment Temperature	5℃~40℃
Battery Capacity	20000mAh @3.7V lithium battery
Charging Time	About 4h (using official fast charger)
Continuous Operating Time	Over than 6 hours
Weight	About 1120g

1.2. Smart Battery Introduction

The smart battery equipped with this model is a polymer lithium power battery, featuring a compact size, light weight and large capacity.

1.2.1. Components

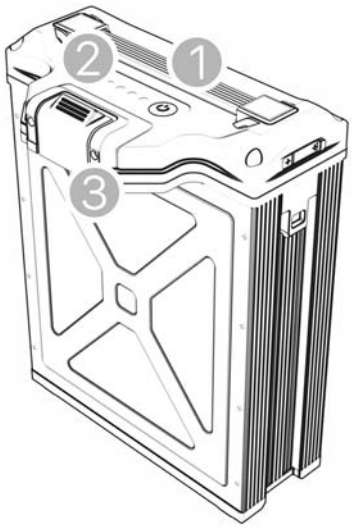

1-10 Battery Component

1、Handle　2、Indicator Light 3、Charging port

1.2.2. Specification Parameters

Subject	Parameter
Typical Capacity	20000mAh
Nominal Voltage	53.2V
Maximum Charging Current	100A（Environment Temperature：25±5℃）
Limited Charging Voltage	60.9V
Maximum Discharging Current	200A
Operating Temperature	5~40℃（Charge） -10~40℃（Discharge）
Storage Temperature	Long-term storage：-10°C ~ 30°C (it is recommended to perform power replenishment and maintenance once every 3 months) Short-term storage：-10℃~45℃
Weight	About 8.0kg

1.2.3. Indicator Status

1.2.3.1. Battery Status Display

Function	Precondition	Operation	LED Indicator	Note
Battery Level Checking	Sleep/Power off	0(short press)	Display the current battery level for 5	The battery level will be displayed for 5s after a short press
Power On	Sleep/Power off	0-1(Short press+long press >1s)	0, display the current battery level;0-1,turn off the display. The LED indicators will light up one by one, then display the	0-1 MOS has been activated after power on

			current battery level	
Power Off	Power on	0-1(Short press+ long press)	0, display the current battery level;0-1,turn off the display. The LED indicators will go off one by one	0-1 MOS has been deactivated after power off
RC Frequency Matching	Battery is activated and RC is on the pairing interface	In the power on status 2 (Long Press>5s)	The LED 3 and 4 will flash while matching. After the pairing is completed, LED indicators will revert to the original status	
Turn Off UPS	Battery is activated	Short press for 5 times, 0-0-0-0-0	0, display the current battery level	UPS is deactivated

Note： 0 means short press, 1 means long press, 2 means long press >5S.

1.2.3.2. Battery Level Display

Notes: "●" means always on; "⊙" means the light flashes; "○" means no light

LED5	LED1	LED2	LED3	LED4	Battery Level
○	●	●	●	●	95%-100%
○	●	●	●	⊙	90%-94%
○	●	●	●	○	80%-89%
○	●	●	⊙	○	70%-79%
○	●	●	○	○	60%-69%
○	●	⊙	○	○	50%-59%
○	●	○	○	○	40%-49%
○	⊙	○	○	○	20%-39%
⊙	⊙	○	○	○	< 20%

1.2.3.3. Charging Status

LED1	LED2	LED3	LED4	SOC
⊙	⊙	○	○	0-59%

⊙	⊙	⊙	○	60%-79%
⊙	⊙	⊙	⊙	80%-100%

1.2.3.4. Error and Alarms

Item	LED Indicator	Description	Note
Upgrade	LED shows progress	LED shows progress	
High Charging Temperature Alarm	LED 5 flashes + LED 4 flashes 3 times/second	Battery charging temperature is too high	Stop charging
Low Charging Temperature Alarm	LED 5 flashes + LED 4 flashes 2 times/second	Battery charging temperature is too low	Stop charging
High Charging Voltage Alarm	LED 5 flashes + LED 3 flashes 3 times/second	Battery charging voltage is too high	Stop charging
Overcurrent Charging Alarm	LED 5 flashes + LED 2 flashes 2 times/second	Battery charging current is too large	Stop charging
Low Discharge Voltage Alarm	LED 5 flashes + LED 3 flashes 2 times/second	Battery discharge voltage is too low	Stop charging
Short Circuit/ Overcurrent Alarm	LED 5 flashes + LED 2 flashes 3 times/second	Battery discharge current is too large	Restores after one minute of unloading
Battery Failure Alarm	LED 5 is always on when powering on	The battery cell voltage is less than 1.5V or the voltage difference is greater than 1V	It is strictly prohibited to disassemble by yourself, please contact the after-sales

Special Note：

1.Activate the battery only after it is well connected to the drone.

2.Disconnect the battery after it is turned off.

3.Charge the battery to 60% every 3 months to ensure a longer service lifetime.

4.Before using, ensure sufficient battery level. When the battery has not been used for a long time, please use the dedicated charger to discharge the battery to the storage voltage, and then store it in a dry and ventilated environment.

5.This battery needs to be charged with a dedicated charger (TC9002P). In order to avoid accidents, please do not change the charger in any condition.

6.Do not use batteries if they emit odors or heat, or they are in an abnormal shape/color or has any other problems. If the battery is in use or charging, it should be immediately removed from the drone or charger. Stop using this kind of battery.

7.It is normal that the flight time will be shortened when the ambient temperature is lower than 10°C.

8.The battery surface should be cleaned in time after the operation, in order to avoid agrochemical corrosion.

9.The drone is strictly forbidden to be used in the environment of strong static electricity, magnetic field or high voltage power line.

10.It is strictly prohibited to pierce the battery case with nails or other sharp objects, or to hammer or step on the battery.

11.If the electrolyte enters eyes after the battery leaks, rinse the electrolyte out instead of rubbing the eye. Seek medical help immediately. Eyes will be injured if not treated in time.

12.It is strictly prohibited for non-professionals to disassemble the battery.

13.Keep away from fire sources when using batteries.

1.3. Charger（TC9002P）

TC9002P intelligent charger is a dual-channel lithium-polymer battery charger with a built-in cooling system. It can achieve constant power charging with a maximum charging current of 165A.

1.3.1. Components

The definition of the charger components is shown in Figure 1-11 & 1-12

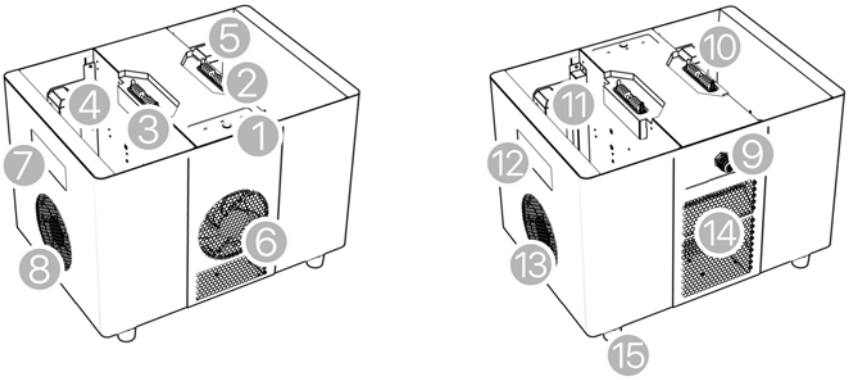

1-11 Charger Components

1. Operational Panel	2,3.Battery Connector	4,5. Battery Support	6. Power cooling fan
7,13. Handle	8,12 Battery cooling fan	9. AC power input	10,11 Battery holder
14. Dust net	15. Shock-absorbing base		

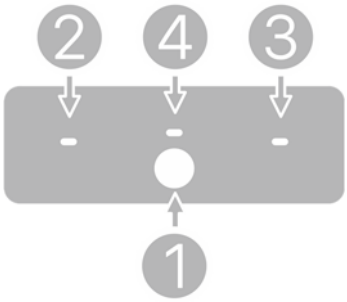

1-12 Operational Panel

1. On/off button	2. Charging Status Indicator 1	3. Charging Status Indicator 2	4. Warning Indicator

1.3.2. Function Description

1.3.2.1. Indicator Light

1) **Power-on self-check：** Confirm that all terminals are correctly connected. When the charger power is turned on, both the charging status indicator and the alarm indicator light up. After a single beep, the lights go out, the self-test is completed, and the charging status indicator breathes normally. For the 220V system: 2 seconds on, 1 second off; for the 110V system: 1 second on, 1 second off.

2) **Battery charging status indicator**

LED Flashing Status	Sound	Meaning	Note
Off	/	No battery is connected to the corresponding charging port	No battery detected Note: When the battery is protected at low temperature (cell temperature <3 degrees) and high temperature (cell temperature >70 degrees), because the battery does not turn on the MOS, the charger cannot detect the battery voltage, and the channel light is also off.
Yellow light always on	/	The battery is connected and waiting for charging	
Green light flashes slowly	/	The battery is in the slow charging state	Charge start or stop phase; when only one module is powered
Green light flashes quickly	/	The battery is in the quick charging state	
Green light always on	/	The battery has finished charging	
Yellow light blinks continuously	/	The battery temperature is too low, and the charging current is limited	Check the battery current limiting flag bit
Yellow light blinks three times	/	The battery temperature is too high, and charging is prohibited	Check the battery overtemperature protection flag
Red light blinks one time	D.D.D…	The battery is not plugged in properly or the battery is not official or the communication is abnormal	No communication but voltage or no voltage but communication
Red light blinks three times	D.D.D…	The battery BMS is faulty	Battery low temperature protection and high

			temperature protection are excluded
Red light always on	D.D.D…	Output overvoltage, other hardware faults	Need to power it on again
Blue light always on	/	Battery type is not compatible, charging is prohibited	

3) Charger warning indicator

LED Flashing Status	Sound	Meaning	Note
Yellow Single Flash	/	Charger temperature is too high	Self-directed derating
Yellow Double Flash	/	Input voltage is under voltage	Self-directed derating
Yellow Triple Flash	/	Input voltage is high	Charge normally
Red Signal Flash	D.D.D…	Ambient temperature is too high or fan malfunction	Stop charging
Red Double Flash	D.D.D…	Fault in charger input voltage (Under-voltage protection)	Stop charging
Red Triple Flash	D.D.D…	Fault in charger input voltage (Over-voltage protection)	Stop charging
Red Solid On	D.D.D…	Output over-voltage or other hardware faults	Stop charging, power off and restart to
Blue Solid On	/	Only one power module is working	/

4) Activation indicator

When the battery is not connected and the power button is pressed, the activated and deactivated indicators are as follows:

Status	Sound	Battery Status Indicator	Warning Indicator	Operating indicator
Deactivated	/	Solid White	Solid White	FLASH

Activated	/	OFF	OFF	FLASH

1.3.2.2. Charging Logic

Dual-Charging Mode: The two power modules built into the charger charge the corresponding batteries on each side, and the charging current is determined according to the battery's demand.

Single-Charging Mode: When only one battery is connected, one of the built-in power modules in the charger charges the battery. When the charger is connected to two batteries with only one AC input, it first charges the battery with higher capacity before charging the battery with lower capacity.

1.3.2.3. Cooling System Working Logic

During the charging process, if the charger detects that the battery temperature or the charging board temperature is too high, the cooling fan will be activated. The fan speed is intelligently adjusted based on the temperature.

1.3.2.4. Charging Steps

Step1: Insert the power cable to the charger's power port, and insert the other connector to the AC power supply (200-240V, 50/60Hz).

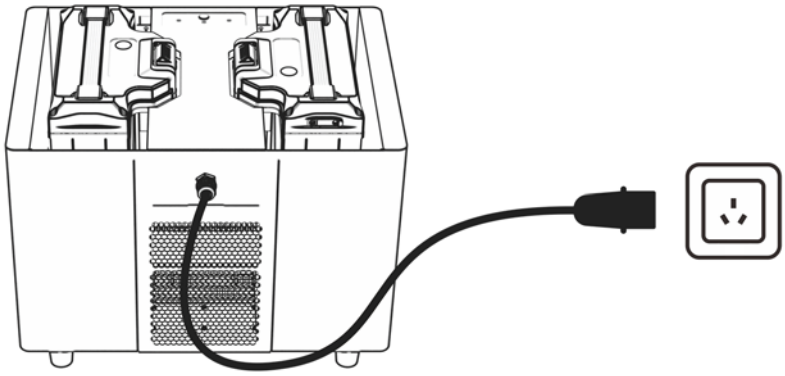

Figure 1-13 Charger Power Cable Connect

Step2: Put the battery into the charger. Please pay attention to the direction of the

connector. Check that there are no foreign objects at the bottom of the charger. After placing it, check whether the battery is in place.

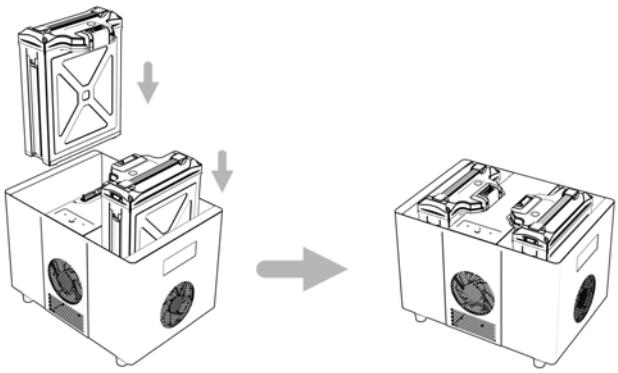

Figure 1-14 Battery Placement

Step3: After making sure that all wires are connected correctly, press the “Start/Stop”button in the operation panel, and the charger will start self-check. If some error occurs during the self-test process, please refer to the indicator status chapter.

Step4: Press the "Start/Stop" button in the operation panel to turn off the battery after charging, unplug the AC power cable, and unplug the battery. Please follow the rules below:

Battery State	Channel Indicator State	Plug or Unplug Battery Instruction
Fully charged	Solid Green	Unplug battery directly
Charging	Green Flashing	If plugging or unplugging is needed, please press the start/stop button first. Plugging or unplugging directly is prohibited

- **Notes:**
- 1.Do not use the product in direct sunlight, high humidity, high temperature, dust, vibration or thunder/lightening.
- 2.Products should be kept away from dangerous substances such as high pressure, heat source, corrosive agent, flammable gas, etc., and must be used at appropriate ambient temperature (5-45°C is recommended).
- 3.The product should be placed horizontally and stably, ensuring good ventilation and heat dissipation conditions during operation.

- 4.When charging, please strictly follow the battery safety instructions and cautions.
- 5.Before connection, please ensure that all ports and input lines of modules and batteries have no obvious defects such as blockage, damage, breakage or short circuit.
- 6.Before use, please ensure that the power supply line has enough capacity to avoid overheating or even fire caused by insufficient capacity, especially when two or more pieces of equipment are used at the same time.
- 7.Do not pull out the input wire or battery when the charger is working. Pull out the battery in time after charging.
- 8.Be sure to place the battery in place before starting charging.
- 9.The cooling box has a limited load-bearing capacity. Do not load the battery for transportation, otherwise the battery and charger may be damaged.
- 10.This charger is only applicable to the battery of this drone. If the user uses the charger for purposes other than those listed in the manual, the Company shall not assume any responsibility.
- 11.Do not leave the charger unattended when it's working. If any function is not
- normal, please stop charging immediately.
- In case of fire, do not use liquid extinguisher to avoid electric shock. Use dry powder extinguisher correctly.

1.3.3. Specification Parameters

Subject	Parameter
Input Voltage	AC 220-240V/50-60Hz
Input Power	9000W
Charging Current	Max 165A
Charging Mode	Constant power charging
Working Temperature	-5°C - 45°C
Working Humidity	0% - 75%
Storage Temperature	-10°C - 70°C

Storage Humidity	0% - 75%
Voltage Detection	Support
Protection	Over-current protection Over-temperature protection Over-voltage protection Short circuit protection
Communication Interface	Bluetooth/CAN
Weight	About 20.0kg
Dimension	430*320*300mm

1.4. Spreader (Optional)

1.4.1. Introduction

As the most important part of the functional accessories of agricultural unmanned aircraft, the spreader is indispensable. Compared with the shortcomings of the traditional manual seeding operation mode, such as low efficiency, high cost and poor uniformity, the spreader can greatly improve the seeding efficiency, reduce the seeding cost and improve the seeding quality. The centrifugal spreader uses a high-speed rotating material tray to evenly throw out particles, which has the characteristics of large spreading range and simple debugging. With built-in quantitative feeding wheel, the discharge rate can be adjusted according to the preset mu amount and flight speed, and the discharge amount can be accurately controlled in real time.

Scenario application: rice, wheat and other seeds fly sowing, grassland supplementary sowing, solid particle fertilizer sowing, aquaculture feed sowing, etc.

1.4.2. Spreading System Assembly

1.4.2.1. Preparation

Since the spraying system and the spreading system share the 3WWDZ-50B platform, the

components of the spraying system need to be removed before the spreading system is installed. The replacement process takes less than 10 minutes.

Notes: During the replacement, the batteries must be removed from the drone!

1.4.2.2. Disassemble the Tank

1. Remove the two plugs of the spray/spread on the HUB module and pull the wire out of the cabling holder on the tank.

Notes: Prevent agrochemical (neither liquid nor solid) from the port during the removal.

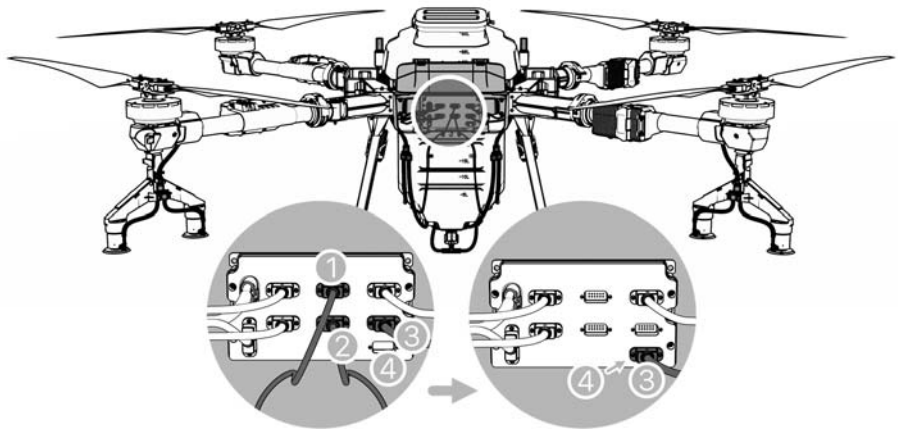

Figure 1-15

2. Unplug the quick disconnect connector of the pipe on both sides of the drone to remove the pipe between the pump and the nozzle.

Notes: If you need to switch the spraying system to spreading system, it is recommended to apply some liquid on the head of the pipe for lubrication.

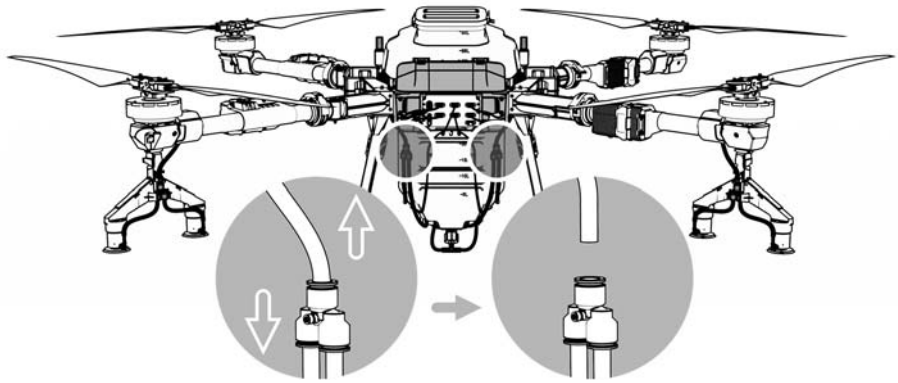

Figure 1-13

3. Remove the tank up straight from the drone.

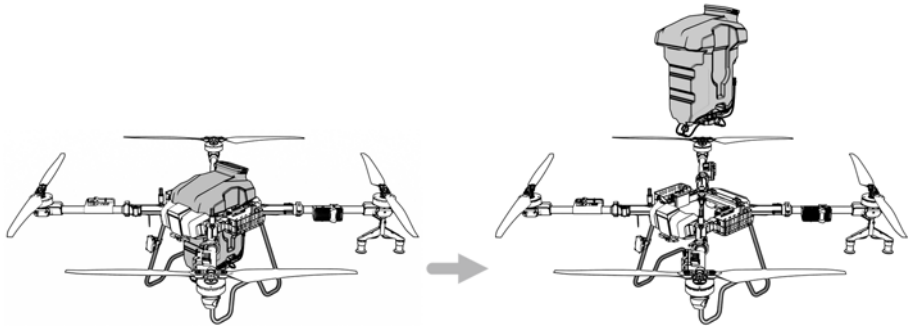

图 1-14

Notes: Do not scratch the surrounding wire during the tank removal.When storing the box, be careful not to bump the water pump, cable and other equipment, and wrap the cable harness connector of the device tightly, waterproof and moisture-proof.

1.4.2.3. Spreading System Assembly

1. Tilt the spreader into the body frame as shown in the figure. Do not scratch the surrounding wiring. Adjust the tank to make sure its supported by four weight sensors. Prevent agrochemical (neither liquid nor solid) from the port during the installation.

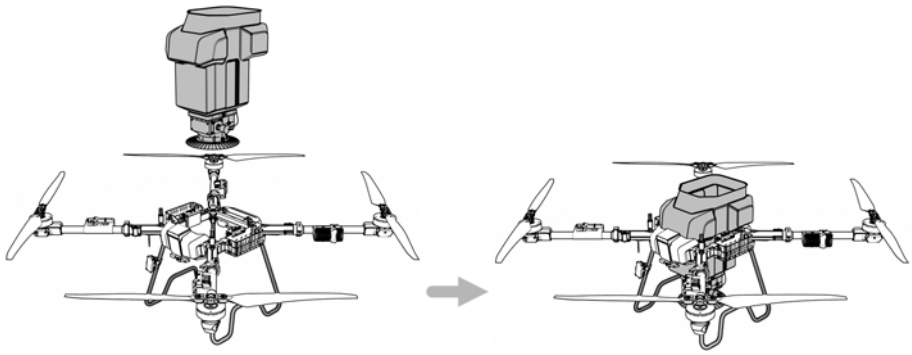

Figure 1-15

2. As shown below, wiring harness No. 1 (blanking roller harness) and wiring harness No. 2 (blanking roller harness) are inserted into position No. 1 and position No. 2, and wiring harness No. 3 (swing disk drive motor) is inserted into position No. 3.

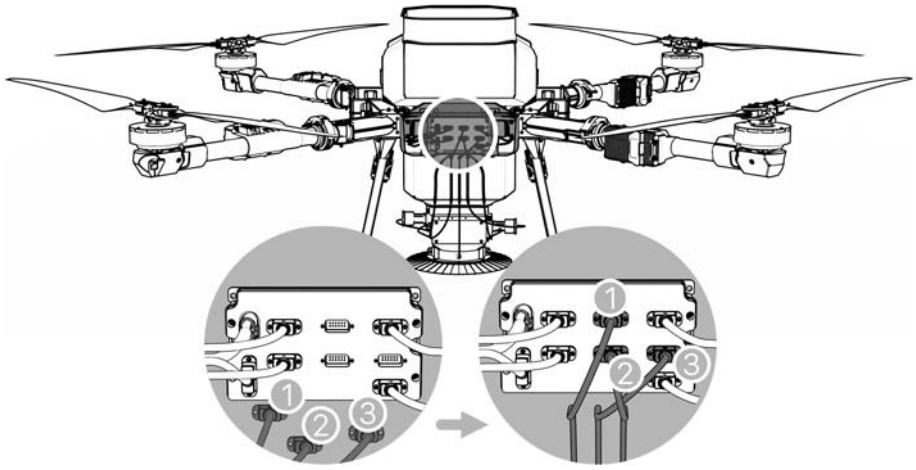

Figure 1-16

1.4.3. Spreader Basic Operation

1.4.3.1. Usage

1. Turn on the remote control and the drone according to the instruction.
2. Enter the Agriculture Assistant APP after step 1 finished.
3. For the first time use of spreading system, please enter the setting interface. Choose the corresponding spreader type in the operation mode list.
4. Choose the roller type and material type in the setting interface according to the actual situation.

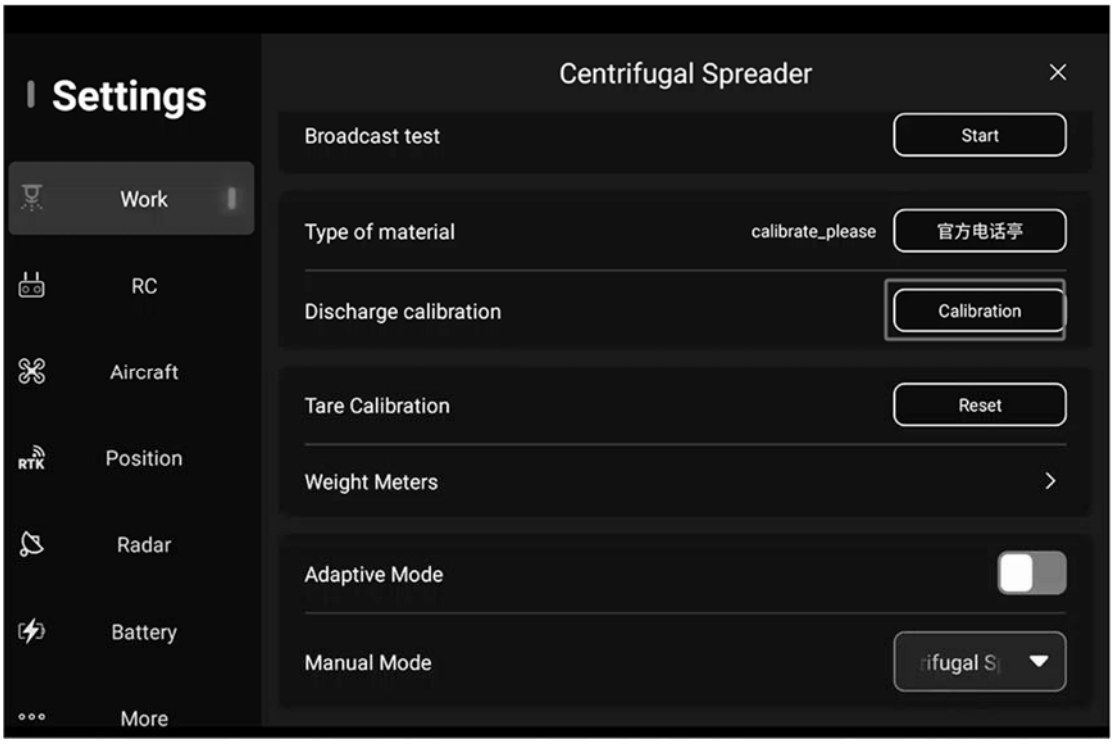

Figure 1-17

5. Set the dosage, route spacing and operating height in the parameter setting interface. The parameter will be different in different scenario. Please adjust the parameters and conduct tests based on the materials and scenarios used to achieve the best operational results.

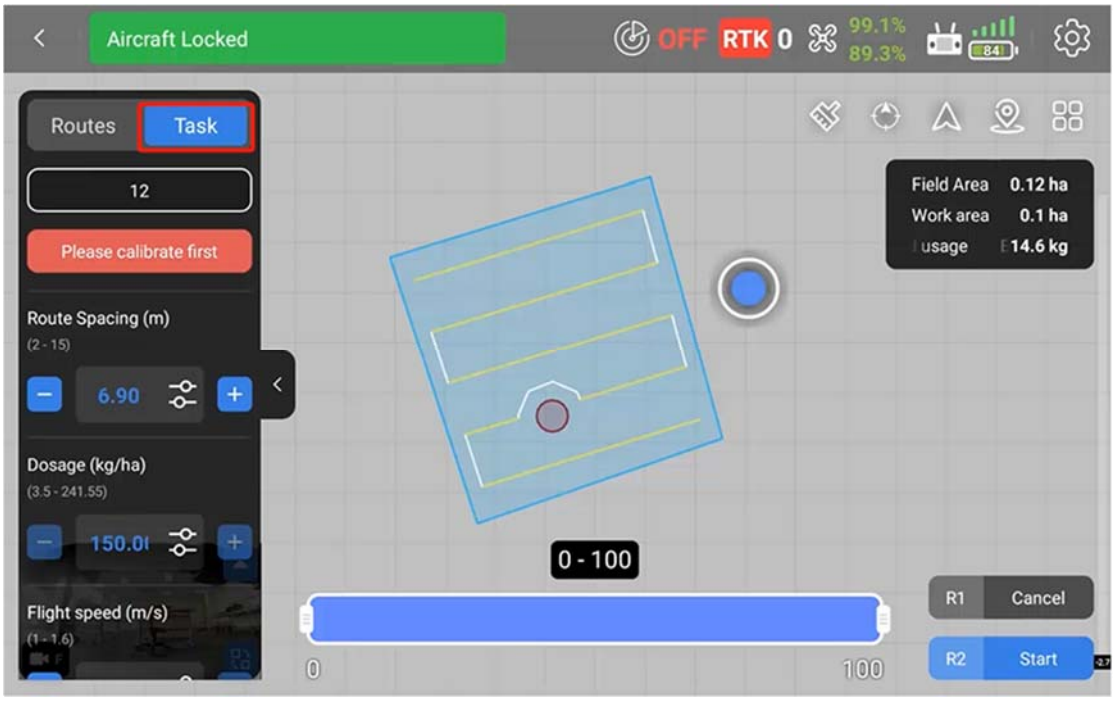

Figure 1-18

Notes:

1. Please keep the granule for operation dry.
2. If you change the granule or rolling feeder, please operate the calibration.

1.4.3.2. Spreader Calibration

Preparation:

1. Please prepare the granule before the calibration. Place the drone on the plain surface, and completely empty the container.
2. Select the type of rolling feeder and granule type. If the granule is used for the first time, click "Manage" to name it.

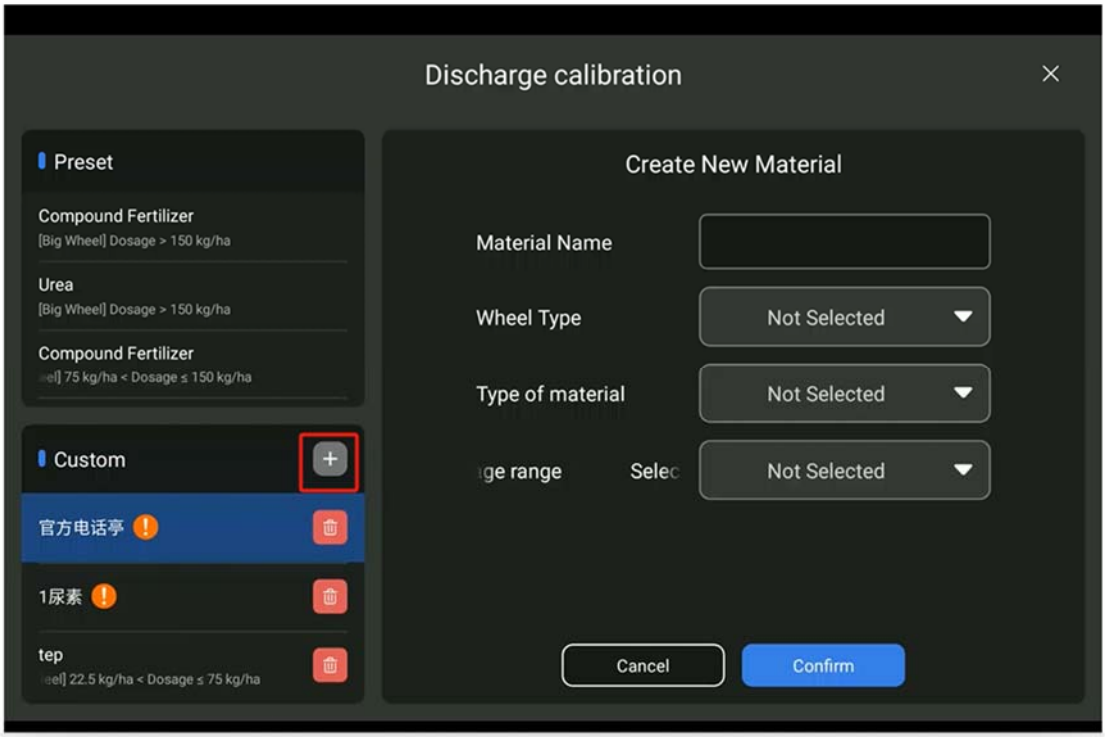

Figure 1-19

3. Click the Calibration to enter the calibration interface. Please operate according to the guidance on the APP. Here are the steps:

Step1. Place the drone on a plain surface and make sure the container is empty.

Notes: If the drone is not placed on a plain surface and the offset angle is large, the

next steps of calibration cannot be operate.

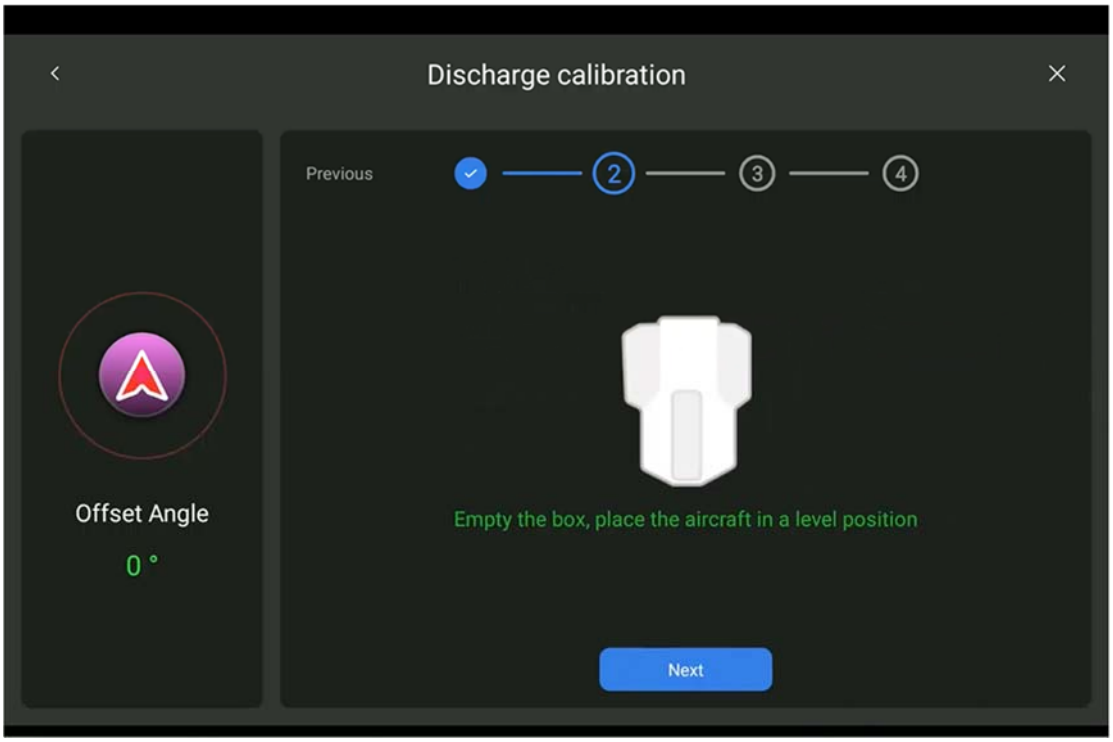

Figure 1-23

Step2. Click ‘Tare’

Notes: If the tare calibration has been completed before, click "Skip".

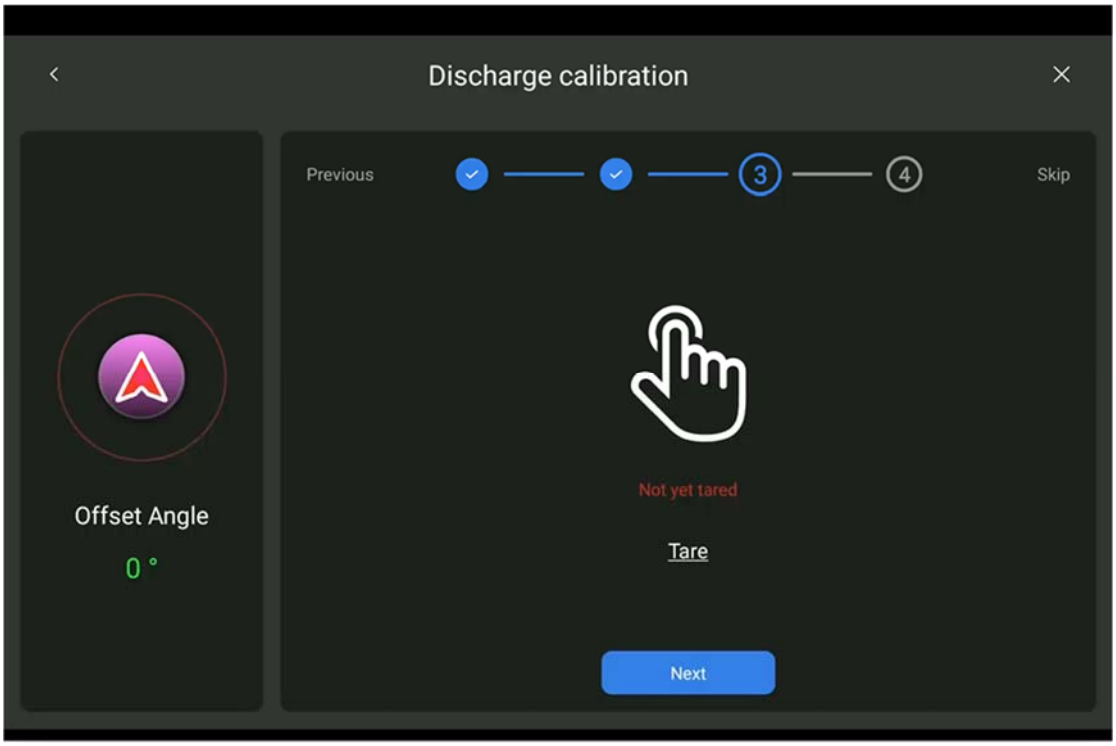

Figure 1-20

Step3. Fill the container. Click “Complete” after filling it, the calibration will start automatically.

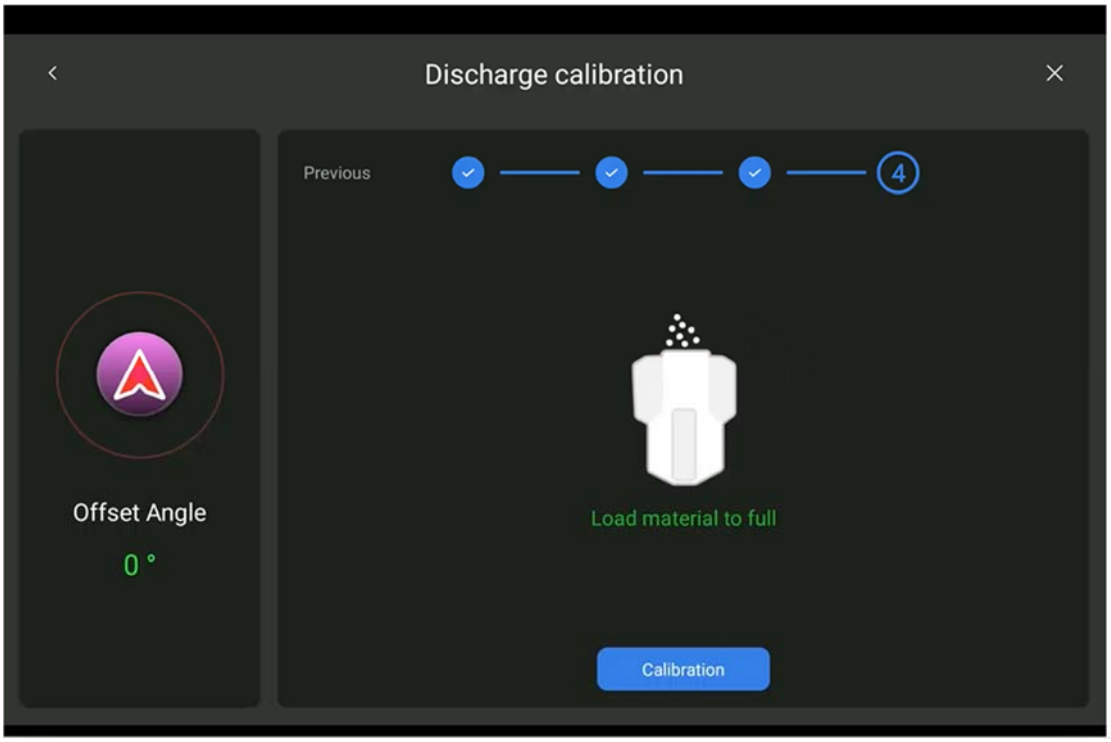

Figure 1-21

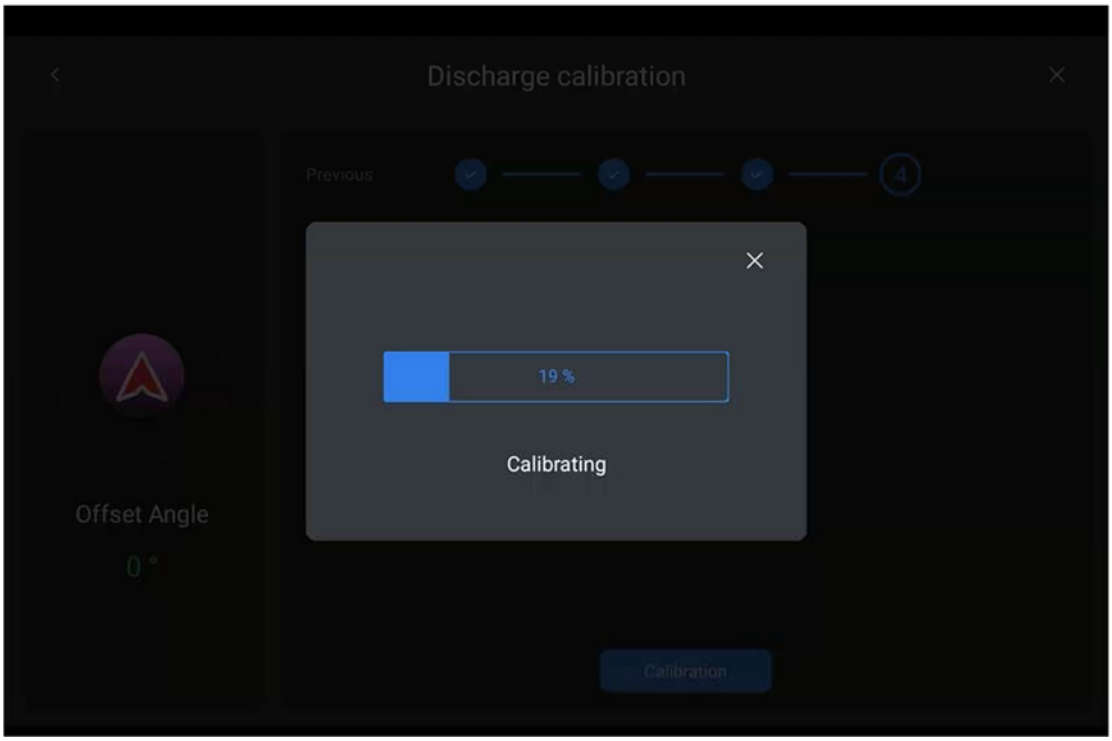

Figure 1-22

Notes: Do not touch the drone during the calibration.

Step4. The calibration coefficient will pop up when the calibration is completed.

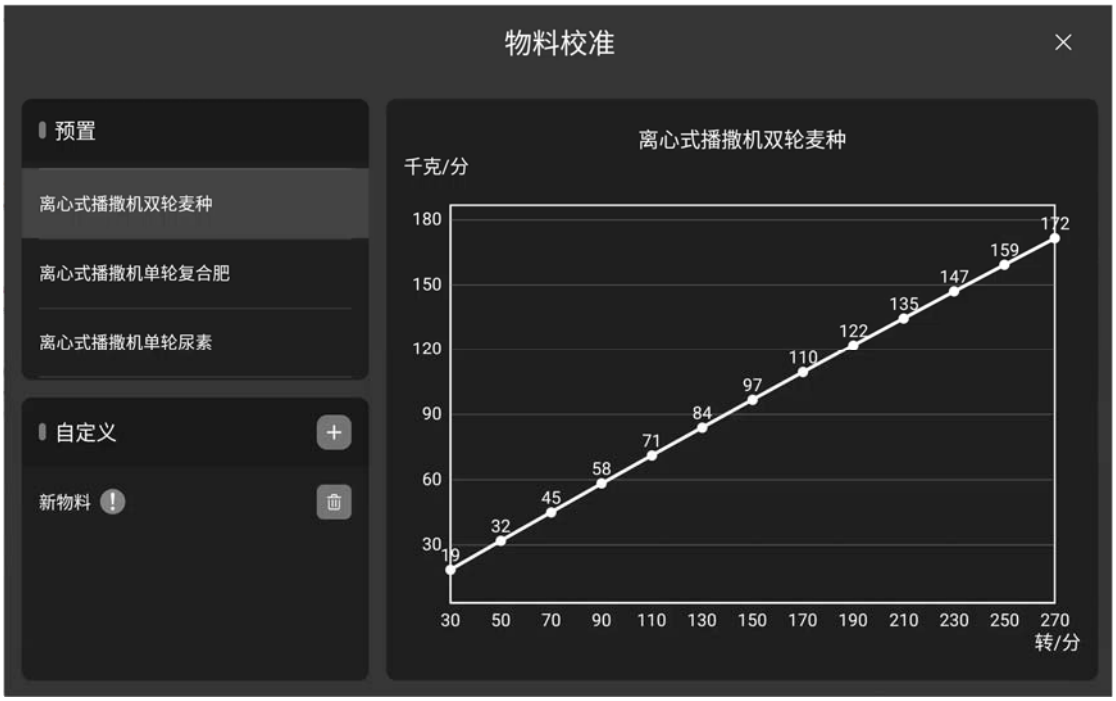

Figure 1-23

Notes: If the calibration fails, please repeat the calibration according to the above steps.

1.4.3.3. Test

There is a spreading test function in the setting interface. Users can click the Start button before operation to make sure the rolling feeder and the fan work properly.

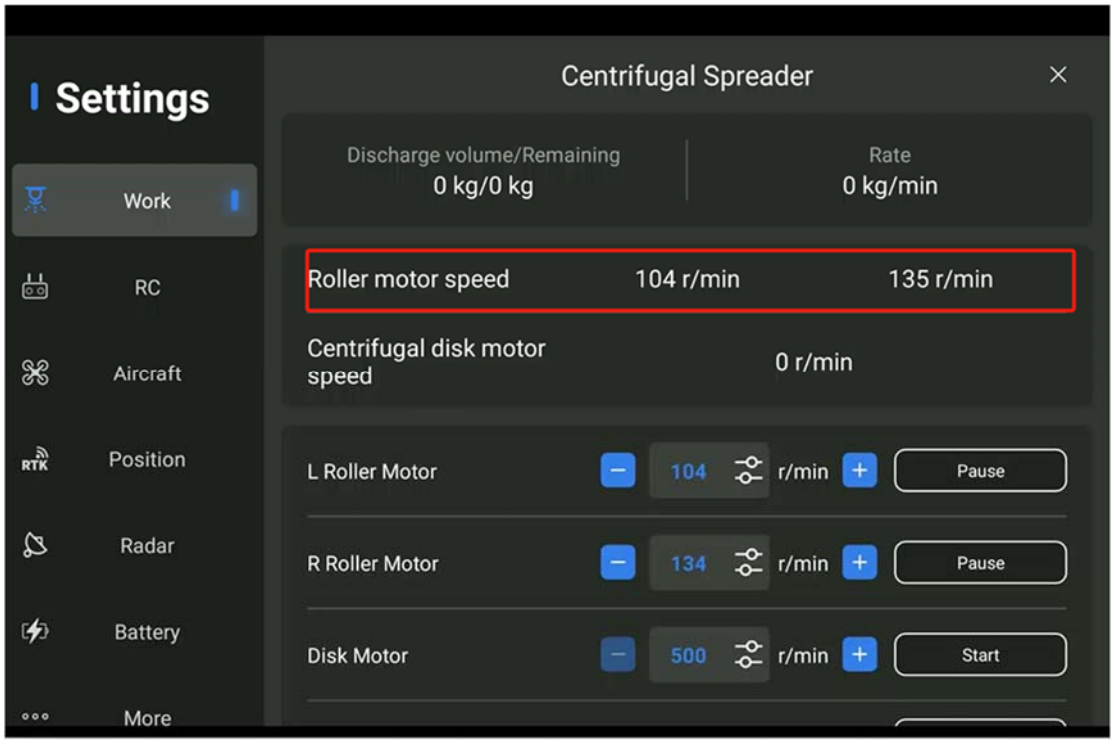

Figure 1-24

1.5. Drone Introduction

1.5.1. Functional Features

3WWDZ-U60B agricultural drone has the following features:

1. Made of professional carbon fibers with lighter weight and higher strength. Foldable arms are designed for easy transportation.
2. The quickly removeable spraying and spreading system, along with the pluggable battery make mode changing easier, enhancing operational efficiency.
3. With a high-precision GNSS navigation system and IMU sensor, the drone has an accurate positioning function to ensure safety and reliability.
4. With the dual-channel high-flow metering pump, it offers a large flow and high spraying accuracy.
5. With four wind-pressure centrifugal nozzles, it provides excellent atomization and strong penetration.

6. Supports centrifugal and air-blowing spreading system optionally, allowing users to choose the most suitable spreading system based on actual needs.

7. The Agriculture Assistant APP supports smart route planning so that the drone can operate autonomously. It helps to make the pilot’s work easier.

8. Environmentally friendly with no exhaust emissions, aligning with energy-saving,eco-friendly agricultural development. It's easy to maintain, with low usage and maintenance costs.

1.5.2. Drone Components

Drone components are shown in the figure below.

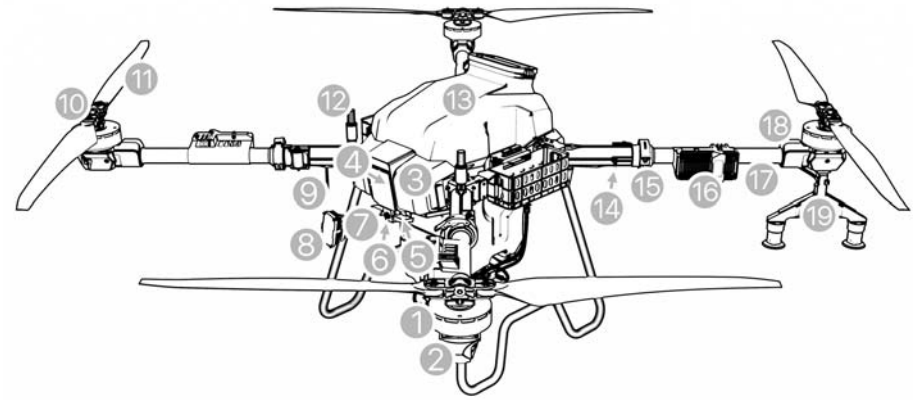

Figure 1-25

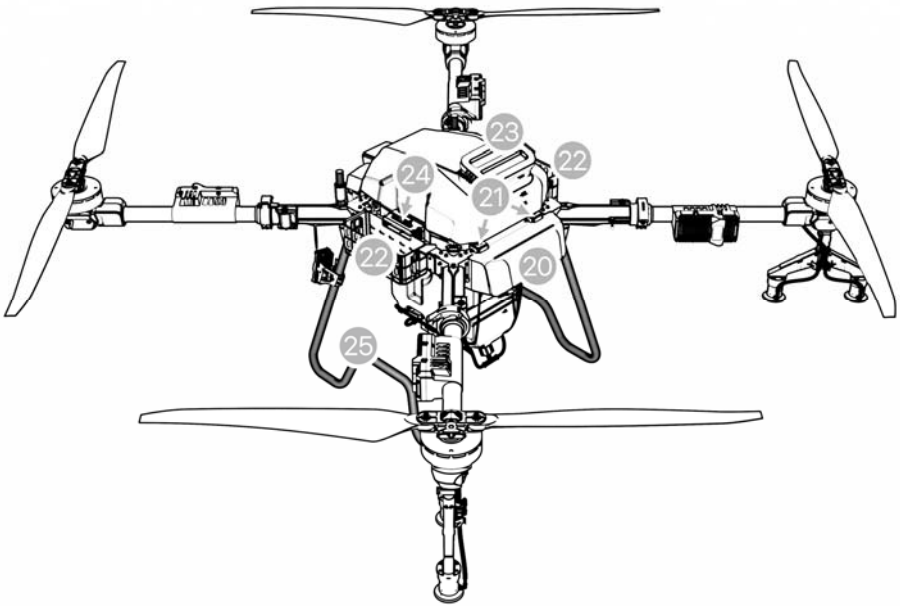

Figure 1-260

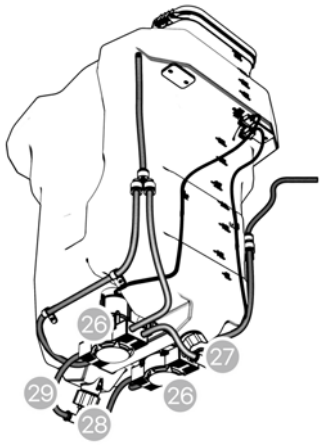

Figure 1-31

1、Motor	2、Motor Cover	3、Nose Cover	4、Front Obstacle Avoidance	5、Terrain Following	6、Front FPV
7、Mapping	8、Light (Optional)	9、Receiver Antenna	10、Propeller clamp	11、Propeller	12、RTK Antenna
13、Medicine Tank	14、Main Folding Arm	15、Folding arm clamp	16、ESC	17、Auxiliary Arm	18、Wire Protecting Cover
19、Centrifugal nozzle and support	20、Tail Cover	21、Weight Sensor	22、Battery Basket	23、Tank Inlet	24、Power Distributor
25、Tripod	26、Metering Pump	27、Tank Outlet	28、Tank Outlet	29、Water Pipe	

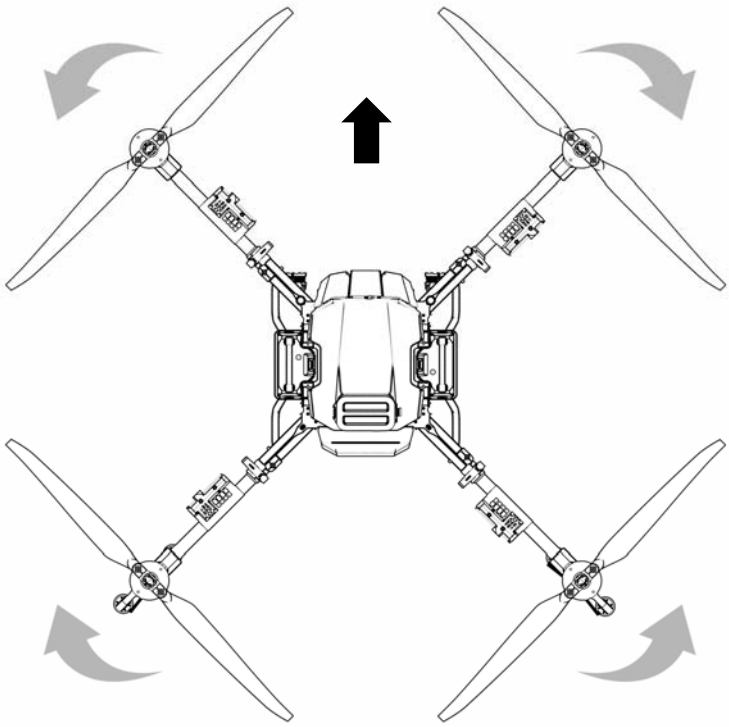

Figure 1-272

Notes:

The propellers on arm 1 and arm 3 rotate clockwise, while on arm 2 and arm 4 rotate counterclockwise. See Figure 1-32.

1.5.3. Preparation

1.5.3.1. Unfold Arms

Step1： Take 3WWDZ-U60B drone out of the box；

Step2： Horizontally rotate the propellers to remove them from the holder；

Step3： Unfold the arms. See Figure 1-33；

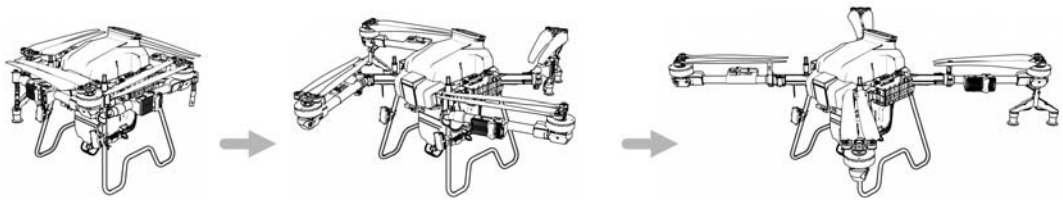

Figure 1-33 Arm Unfolding

Step4： Make sure the clamping component is tightened, as shown in Figure 1-34.；

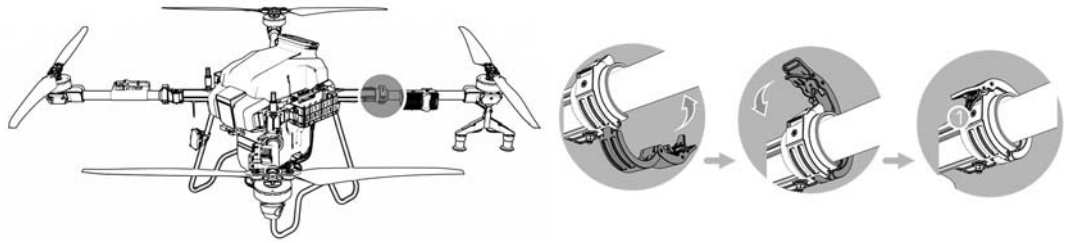

Figure 1-34 Arm Clamp

Step5： Unfold the propellers to 180°, as shown in Figure 1-35.

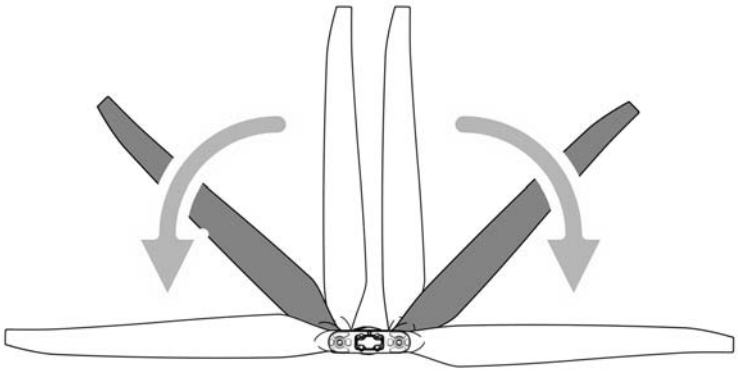

Figure 1-35 Unfold the Propellers

Notes: Be careful with your hands during the above process.

1.5.4. Battery Installation

Be sure to use the official battery and check the battery level before flying.

Step 1: Place two smart batteries separately into the battery guide rails on both sides of the drone.

Step 2: Connect the battery output port to the body, and the battery is locked in when you hear a “click”. See Figure 1-36.

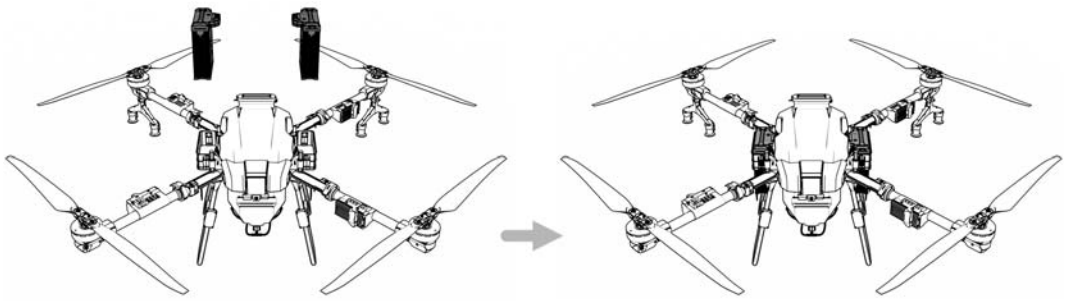

Figure 1-36 Insert the battery

1.5.5. Calibration

1.5.5.1. Magnetic Compass

Method 1: Access the calibration function via remote control

Step 1: Pull down the throttle.

Step 2: Quickly toggle down "Flight Mode Switch" to the down position ("S") and toggle it up

to the up position (“G”) for about 6-10 cycles until the status indicator light flashes blue.

Step 3: Place the drone head forward and keep the drone level with the ground. Slowly rotate the drone clockwise for at least one circle. If the status indicator flashes green, process to Step 4. If the status indicator is solid green, the calibration is completed.

Step 4: Lift the drone horizontally for more than 45° to the ground. Slowly rotate the drone clockwise for at least one circle until the status indicator shows solid green for 4s. The calibration is completed.

Step 5: Calibration fails if the status indicator shows solid red for 4s. Repeat Step 2-4 until the operation succeeds. See Figure 1-37.

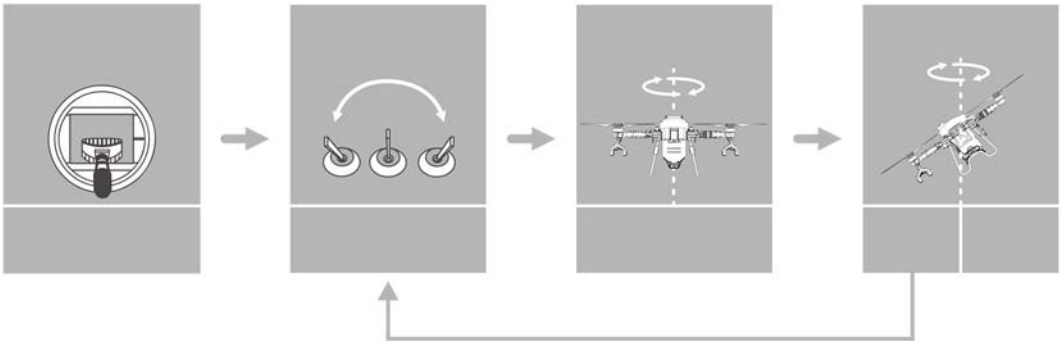

Figure 1-37 Compass Calibration

Method 2: Enter the calibration function via APP:

Step1： Tap in top right corner to get into settings, then tap 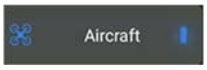

to get into flight settings；

Step2： Tap

to get into magnetic compass setting, tap [calibration], and the drone navigation light will flash blue.

Step3： Repeat the Step 3-5 in Method 1

Notes：

1、 Before calibration, the propellers on the drone should be removed.

2、 Do not calibrate it in areas with strong magnetic fields, such as magnetic mines, parking lots, building areas with underground steel reinforcement, etc.

3、 During the calibration, do not carry ferromagnetic materials, such as keys, mobile phones,

etc.

4、 Do not calibrate the compass indoors.

1.5.5.2. Flowmeter

When using the drone for spraying operations for the first time, be sure to perform flowmeter calibration to avoid affecting the operation effect.

Preparation before calibration: Press “” of the RC at top right corner, start the pump when the drone is on the ground to discharge the air from the pipeline.

Enter “Setting”,“Work” interface. Click “Flowmeter Calibration”.

Notes：

1. Re-calibrate after replacing agrochemical with different viscosity.
2. Re-calibrate if the error between the actual operation area and theoretical operation area is more than 10%.

2. Flight

2.1. Flight Instruction

According to the regulations of the International Civil Aviation Organization (ICAO) and national air traffic control on airspace control and the regulation of drones, drones must fly in the prescribed airspace. The 3WWDZ-50B is equipped with a built- in Remote ID broadcast function, which is enabled by default and cannot be turned off. The broadcasted information includes the real-time location of both the drone and the operator, meaning that anyone can receive this data. Before each flight and during operation, please ensure that the Remote ID function remains active at all times. For flight safety, the flight restriction function (including altitude and distance restrictions and no-fly areas) is enabled by default to help users operate the product safely and legally.

When GNSS is available, the no-fly area affects the flight together with altitude and distance restriction. The drone flyable airspace is the intersection of restricted airspace. Without GNSS,

the drone flight height is not limited by Agriculture Assistant APP.

2.1.1. Altitude and Distance Restriction

Height limit is used to limit the flight height of a drone and maximum radius is used to limit the flight distance. The maximum flying altitude of the drone on delivery is 30 meters. See Figure 2-1.

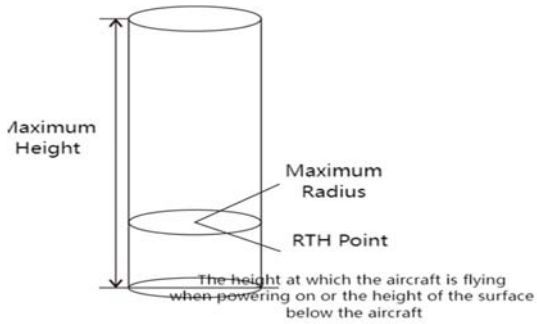

Figure 2-1 Altitude and Distance Restriction

GNSS State	Flight Mode	Flight Limit		Notification
With GNSS	GPS mode and autonomous mode	Max Altitude	30m	Warning
		Max Radius	1999m	Warning
	Attitude mode	Max Altitude	20m	Automatically switch to GPS mode with warning
		Max Radius	1999m	Automatically switch to GPS mode with warning
Without GNSS	Attitude mode	Max Altitude	No limit	No warning
		Max Radius	No limit	No warning

2.1.2. No-Fly Zone and Restricted Area

2.1.2.1. No-Fly Zone

The area includes airport restricted flight areas and special flight restricted areas. For more

details, please refer to special flight restricted areas defined by local authorities.

2.1.2.2. Restricted Area (when GNSS is available)

Areas are temporary restricted for flying due to emergencies (such as forest fires, large-scale events, etc.). The restricted area can be a circle or a polygon. The drone is not allowed to fly within the no-fly zone. See Figure 2-2

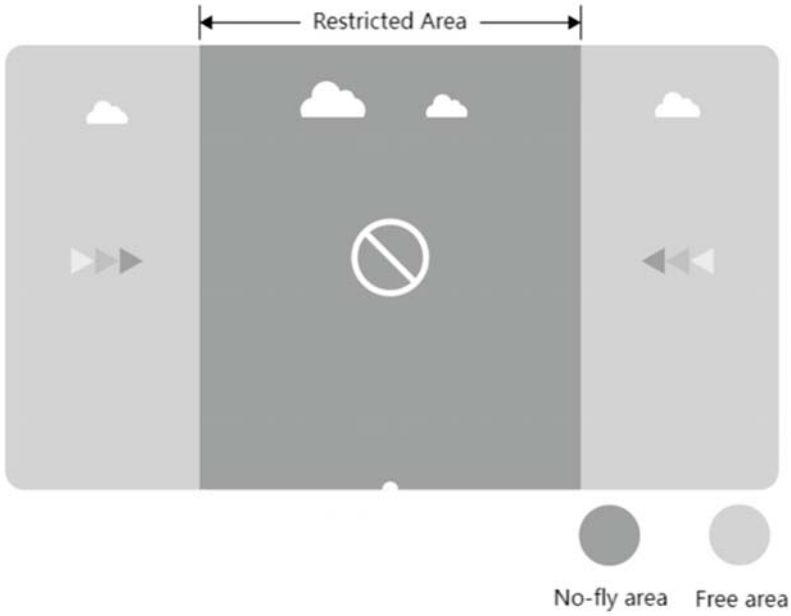

Figure 2-2 No-Fly Zone and Restricted Area

When GNSS Signal Is Normal		
Area	Special Area with Flight Restriction	Status Indicator Light for the Drone
No-fly Zone	The motors can not be activated.	Red light solid on for 5s and off in 1s
	If the drone flies without GNSS, it will land automatically immediately after GNSS is available, and the motor stops automatically after landing.	
Close to No-fly Zone	Distance to the no-fly zone <120m. The drone flight speed will slow down with flashing lights and alarming.	Red light solid on for 5s and off in 1s
Fly Zone	The drone can fly normally. No flight restrictions.	No Warning

Notes：

For flight safety, please try to avoid airports, highways, railway stations, subway stations or urban areas. If users need to fly in such areas, prepare relevant materials and apply for temporary airspace to local authorities. Then contact the after-sales service to release the restriction.

2.2. Indicator Description

On the first test flight, it is recommended to understand the meaning of the flight status indicators to ensure a safe flight.

No.	Status	Content	Indicator Display
1	Normal	Power on Self-check is completed GPS satellite searching	Flash yellow for twice
2		Preparation is completed; waiting for take-off	Solid yellow
3		Taking-off and flying	Head direction, solid red; Opposite head direction, solid green
4		Mode switch	Flash green for 5s
5		Magnetic compass calibration (Horizontal)	The indicator flashes yellow twice per second
6		Magnetic compass calibration (Vertical)	The indicator flashes green twice per second
7		Magnetic compass calibration succeeds	Solid green for 4s
8	Abnormal	Magnetic compass calibration failure	Solid red for 4s
9		Self-check Failed	Solid red
10		Low Voltage/Volume Level I	Flash red slowly
11		Low Voltage/Volume Level II	Solid red
12		IMU failure	Solid red
13		Barometer failure	Solid red
14		GPS failure	Solid red
15		Independent magnetic compass failure	Solid red
16		Motor failure	Solid red
17		RC lose control	Solid red

2.3. Operation

2.3.1. Inspection before Flight

Please check the following points to avoid flight accidents.

1. Place the drone in the open operation area and the user should face the tail.
2. Make sure that the battery of the drone is installed properly.
3. Before flying, it is necessary to turn on the remote controller before plugging in the battery of the drone.
4. Ensure the battery of the drone and the remote controller are adequately charged, also the agrochemical required for spraying is sufficient.
5. Make sure that the motors and propellers rotate in the correct direction and the structure is stable. All arms and propellers of the drone have been fully extended, and the arm sleeves have been tightened.
6. Make sure that the spraying pipes are free of blockage and leakage, and the nozzles can spray water normally. If there is no liquid sprayed out during spraying test, please turn on the pressure relief valve on the side of the nozzles manually. After discharging the air, turn off the pressure relief valve, and the nozzles can be used for operation.

2.3.2. Lock and Unlock

2.3.2.1. Unlock

The unlocking operation is shown in Figure 2-3. When you unlock the drone, the motors rotate in the sequence of No. 1, No. 2, No. 3 and No. 4. When motor No. 1 starts, push the throttle slightly up and all the motors will start at the same time.

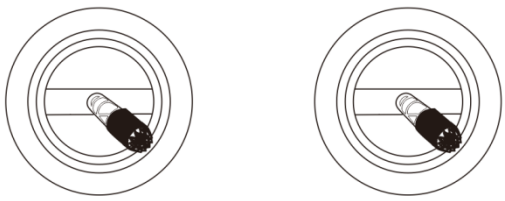

Figure 2-3 Unlock

2.3.2.2. Lock

The drone supports two active locking methods:

- Perform the operation shown in Figure 2-4 to lock the drone.
- After the drone lands, the throttle stick should be kept at the down position for at least 3s, and then the drone will be locked automatically.

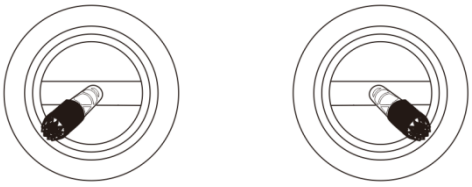

Figure 2-4 Unlock

2.3.3. Take Off and Land

2.3.3.1. Take Off

Step1： Press“⏻”one time and press“⏻” for 2 seconds, start the remote control；

Step2： Turn on the power supply of the drone.

Step3： The pilot should keep a distance from the drone of more than 10m. Enter the operation interface of the Agriculture Assistant APP to ensure that the signal of GNSS is good, and the status indicator light of the drone is not showing red, which means there’s no warning.

Step4： Perform the unlock action, the drone motors will start one by one, then slowly push up the throttle stick to take off.

Step5： The drone remains at its current altitude and hovers after the throttle lever is centered, as shown in Figure 2-5.

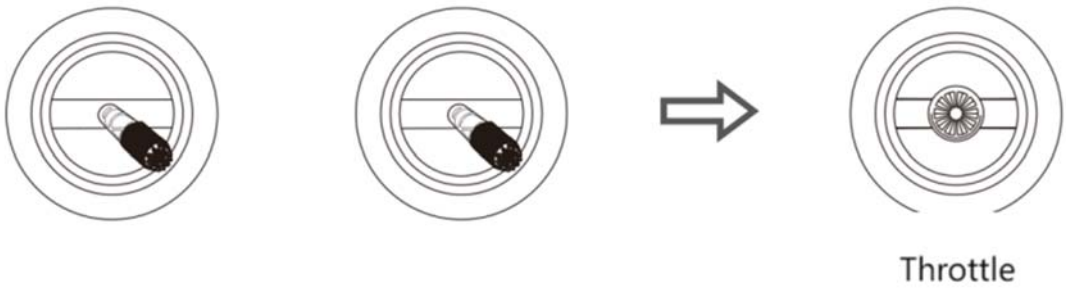

Figure 2-5 Unlock and Take Off

2.3.3.2. Land

Step1： Slowly pull down the throttle stick, and the drone lands on the ground.

Step2： After the drone lands, place the throttle stick to the down position, and then perform the locking action as shown in Figure 2-6.

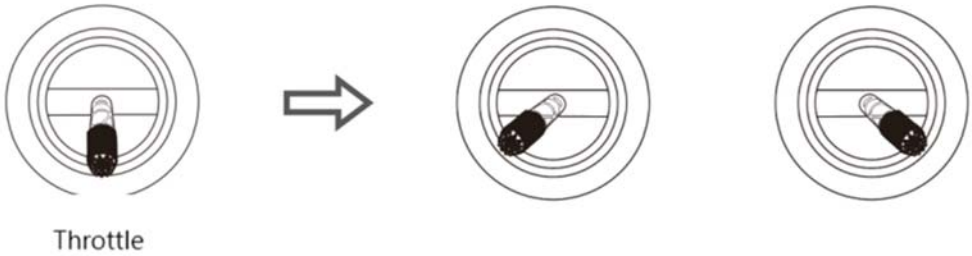

Figure 2-6 Lock and Land

Notes：

1. For the first test flight, the flight altitude shall not exceed 4m.
2. Do not fly beyond the visual range for the first test flight.
3. If there is light flashing showing an alert or there is a warning on the interface of the Agriculture Assistant APP during the flight, please land immediately and check the drone according to the plant protection assistant warning information.

2.3.4. GNSS Operation Mode

2.3.4.1. Mode Introduction

GNSS operation mode has the features of being easy-to-use and quick-to-start, which is suitable for the operation in small, irregular and complex fields. In GNSS mode, the maximum flying speed of the drone is 10m/s. The spraying speed of the liquid is related to the flying speed. The faster the drone flies, the greater the flow rate is. When the drone hovers, the flow shuts down automatically.

2.3.4.2. Operation Steps

Step1： Before take off, press "" button to start the testing spray, to check if there is air in the pipeline；

Step2： The drone takes off and flies to the field for operation；

Step3： Press "" button and fly the drone to the field and start the operation.

Note： During the operation, make sure that the drone is in the visual range.

2.3.5. Autonomous Operation Mode

2.3.5.1. Mode Introduction

Users can survey the field and mark the obstacle, and set the border point using the field surveying function of the Agriculture Assistant APP. The Agriculture Assistant APP will calculate and generate the best route. This mode is suitable for large or irregular fields. The operation route of fully autonomous operation mode is shown in Figure 2-8. The dotted line shows the line spacing. It can be set in the Agriculture Assistant APP.

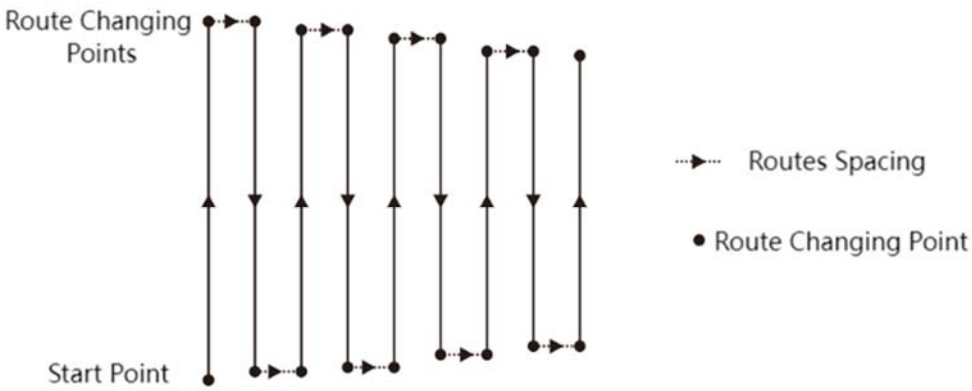

Figure 2-7 Autonomous Operation Route

2.3.5.2. Field Mapping Steps

Step1. Run the Agriculture Assistant APP and there will be three options (GPS mapping mode, drone mapping mode and RTK hand-held marker mapping mode), you can choose according to the actual situation.

Step2. Set a name for the field.

Step3. Mark the border points: select the points at each corner of the borderline.

Step4. Mark the obstacle: if there are obstacles in the field, click the obstacle point and select the shape. Click on the turning points of the obstacle shape to set it as an obstacle point, and then click "OK" after the obstacle points setting is completed.

Step5. Calibration point settings: after editing the operation area, calibration points need to be added. Calibration points are used for map rectification. When setting calibration points, make sure the reference object is easy to identify; the surrounding area is clear and suitable for the drone to take off. The operation area setting is completed when the calibration point is set.

2.3.5.3. Autonomous Operation Steps

Step1： After the Agriculture Assistant APP is connected to the drone, click to expand the land/task list in the main interface.

Step2： Select a field (or a field in the task list) and click to use the field.

Step3： Place the drone at the calibration point of the operation area, click on“Calibrate”, then click “Calibrate Drone Position”.

Step4： After the field is chosen, set the following parameters one by one: route angle, turning mode, route inner contraction, obstacle point spacing, altitude, usage per mu, ways of bypassing obstacle area.

Step5： According to the route condition, select the routes ready to be sprayed (all routes are selected by default).

Step6： Click “Start Operation” on the operation interface.

Step7： Slide to unlock (please set the RTH height and take off height), and the drone will take off automatically and execute the planned route.

Step8： Complete the operation (also can be finished manually during operation) and then generate the operation report.

Notes：

1. During the operation, it is necessary to ensure that the drone is in the visual range.
2. During the operation, the throttle stick of the RC can be toggled to adjust the flight altitude according to the plant condition. When the throttle stick is in the central position, the drone will resume its setting altitude.

2.4. Function Introduction

2.4.1. Remaining Liquid

2.4.1.1. Introduction

3WWDZ-U60B is equipped with weight sensors,which can detect the remaining liquid in real-time and display it in percentage to the users, as shown in the figure below. During operation, users can choose suitable breakpoints considering the remaining liquid and route length. This

can reduce the time when drone is flying to the breakpoint and not operating, which will improve the operation efficiency.

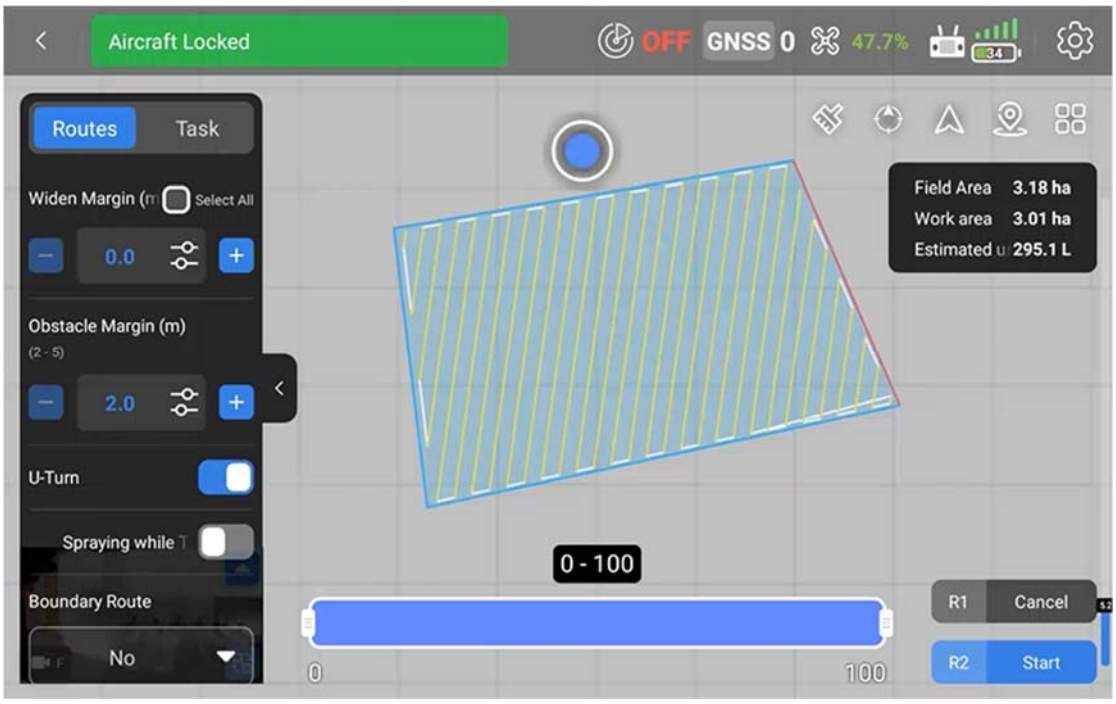

Figure 2-8

2.4.2. Resume Operation From The Breakpoint

2.4.2.1. Introduction

If the breakpoint is recorded during the operation due to running out of agrochemical, low battery, manual braking, obstacle avoidance, etc., the drone can be set to resume operation from the breakpoint following the established route.

2.4.2.2. Record the Breakpoint

During the operation, the drone will record the breakpoint and resume the operation at the breakpoint in the following situations:

1. Insufficient liquid in the tank.
2. When the low voltage protection function is enabled and the Level II warning is triggered.
3. Pitch or roll stick on the RC is pulled/pushed.
4. When the drone enters the RTH mode.

5. When the drone has obstacle avoidance and has detected the obstacle, which leads to an automatic brake.
6. When the location signal or heading signal is weak, the drone will automatically exit the operation mode and enter the protection mode, and record the current coordinate as the breakpoint.

Notes：

1. Any condition above is met, the drone will update the breakpoint.
2. The following actions can be set for the drone according to the operating environment after no remaining liquid: hover, raise 2m and hover, RTH and no action.

2.4.2.3. Return to The Breakpoint

The steps for returning to the breakpoint are as follows:

Step1： Step 1: Hover the drone manually in any open place and ensure there is no obstacle between this position and the breakpoint.

Step2： Step 2: Click 'Breakpoint' or 'Projection Point' in the Agriculture Assistant APP.

Step3： Step 3: The drone automatically rises or descends to the operating altitude and returns to the breakpoint.

Step4： Step 4: Resume the set route and continue the operation.

2.4.2.4. Return to The Projection Point

If there is any obstacle on the way back to the breakpoint, you can choose "Projection Point" to return to avoid the obstacle.

Step5. After the operation is paused, you can fly the drone manually to bypass the obstacle.

Step6. Click "Continue" at the bottom right corner and select "Fly to Projection Point", and you will see options 1, 2, corresponding to waypoints marked 1, 2 in the flight routes.

Step7. Click on one of the points, and the drone will fly to the point to continue the

operation.

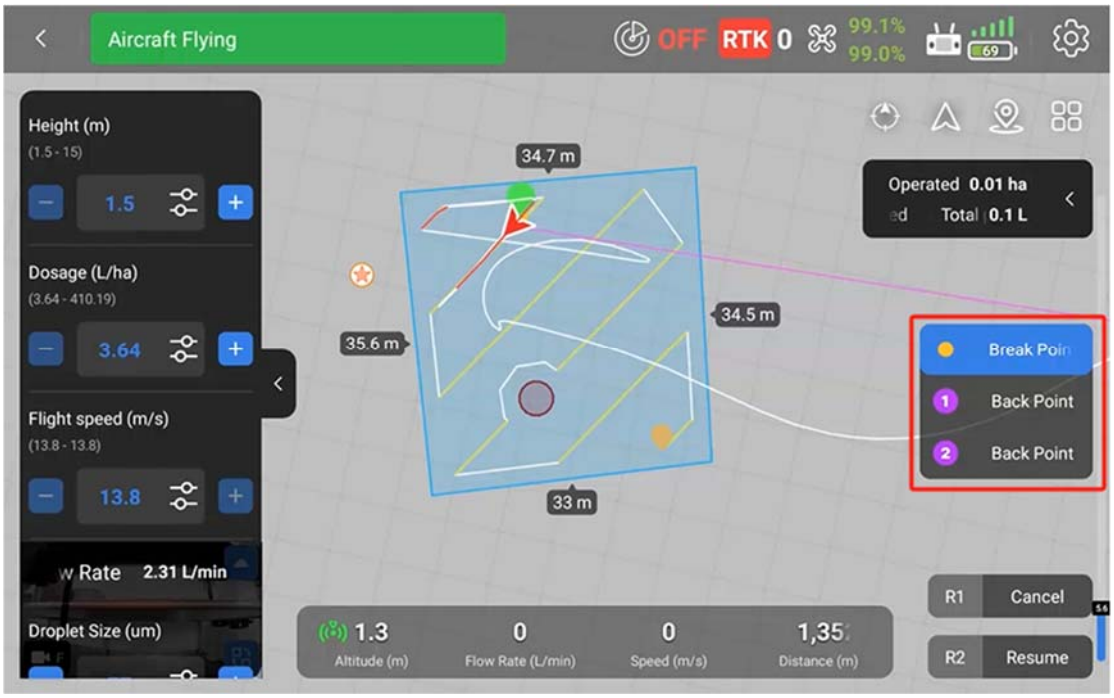

Figure 2-9

2.4.3. Terrain Following

2.4.3.1. Introduction

The working range of altitude stabilization function of the terrain-following is between 1m and 10m. When the terrain-following is turned on, the relative height of the drone and the plants can be kept unchanged during the operation. The drone will fly following the terrain to ensure uniformity of the spraying

2.4.3.2. Terrain Settings

For both plain and mountainous terrain, the drone adopts different tracking strategies and the user needs to set the simulated scene of the flight according to the actual operating terrain.

Setup procedure:

Step1: Tap in the top right corner of App

Step2： According to the terrain situation, select "plain" or "mountain" on the right side of the column "Terrain Settings".

Notes：

1.Module housing should not be crushed causing deformity.

2.Keep the antenna cover clean and wipe the surface regularly with a soft damp cloth depending on the frequency of use.

3.When flying the drone over an object surface with a slope, the correlation between simulated slope and flight speed is shown below: 10°(<2m/s), 6° (< 4m/s), and 3° (< 6m/s).

2.4.4. Low Battery Protection

The drone has a low battery level protection function. The user can set the warning threshold, which is the battery level in percentage in the Agriculture Assistant APP. When the value is reached, the drone will act according to the setting. The action can be set as: hover, land, return, no action (only light flashing).

2.4.4.1. Level 1 Protection

As the Level I protection, the drone indicators flash red. The protection will be triggered after the indicators flash for 10s. The factory default Level I low power threshold is 30%, and the protective action is "no action". At the same time, the Agriculture Assistant APP sends voice notification “Level I Low Battery”.

2.4.4.2. Level 2 Protection

As the Level II protection, the drone indicators flash red. The protection will be triggered after the indicators flash for 10s. The factory default Level II low power threshold is 10%, and the protective action is "auto-landing". At the same time, the Agriculture Assistant APP sends voice notification “Level II Low Battery”.

Notes：

1. When Level I warning occurs, fly the drone to the safe area and land as soon as possible.
2. It is necessary to avoid the Level II warning as much as possible to avoid accidents.
3. After the low battery protection action is triggered, the drone can only be switched to attitude mode or RTH mode.
4. When the drone lands automatically, the protection mode can be quit by switching to attitude mode.

2.4.5. Lost Control Protection

2.4.5.1. RTH Description

When the GPS signal reaches the seven satellites for the first time during taking-off or flight and the signal quality is good, the drone will record the current location as the RTH point. The process of the drone returning automatically to the RTH point is called RTH.

2.4.5.2. Protection Logic

When the drone is in good GNSS signal, the compass work normally, and the RTH point has been successfully recorded. If the RC signal is lost for any reason during the operation, the protection action will be triggered. The protection actions include landing, hovering and RTH.

Notes:

1. When the RC is well connected, RTH can be canceled by toggling the RC switch to "S", and the drone can be controlled manually.
2. When the RC is well connected, RTH can be canceled by long-pressing the "Ⓗ"button for 2s.

2.4.6. Obstacle Avoidance

The drone is equipped with a new 4D millimeter wave for obstacle detection, which is

unaffected by ambient light and dust. When the working conditions are met, can detect the obstacles in front of and behind the drone. The maximum detection distance can be up to 40m. When obstacles are detected, the drone self-brake to ensure safety during the operation. The obstacle avoidance function is enabled by default and can be turned off in the Agriculture Assistant APP.

2.4.6.1. Detection Range

The detection range of the module is shown in the following figures. The vertical direction is ±60° and the horizontal direction is ±30°. If any obstacle is beyond the detection range, the module cannot detect it so the pilot should operate carefully.

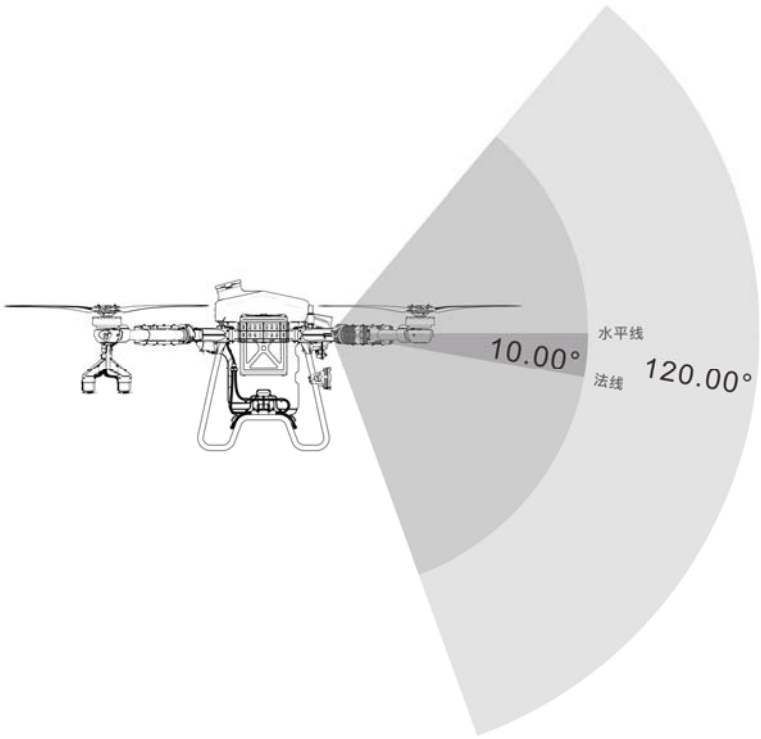

Figure 2-10

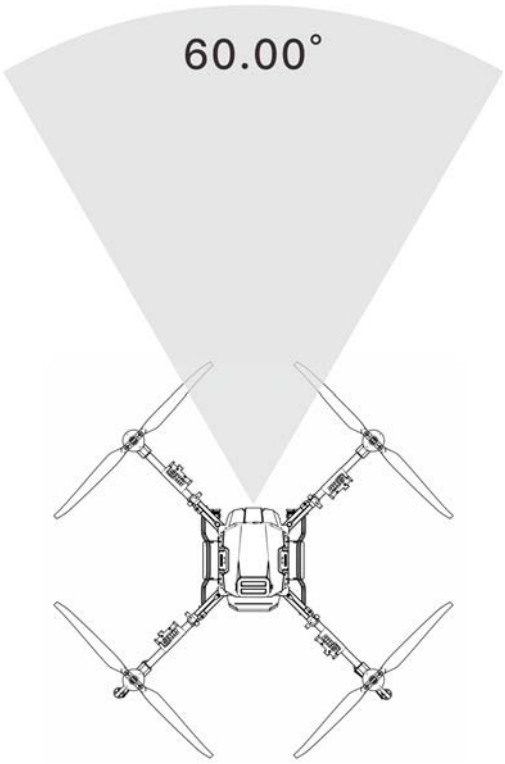

Figure 2-11

2.4.6.2. Status Description

The distance between drone and the obstacle is X

Status 1	Status 2	Status 3
X≥30M	30M≥X≥8M	X < 8M

Status 1: When the obstacle distance ≥20m, the drone will not brake and the APP will not display any warning.

Status 2: Entering the yellow warning zone, the drone slows down to 2m/s and maintain it. The APP will show the distance between the drone and the obstacle in the yellow zone.

Status 3: Entering the red warning zone, the drone will brake urgently and enter the Safe Mode. In the Safe Mode, the drone will remain to hover and cannot be operated to fly towards the direction of the obstacle. The APP will display the obstacle distance in the red zone. Flying the drone to the opposite direction of the obstacle will exit the safe mode.

Special Condition:

If any obstacle appears suddenly during the flight, the drone will stop with maximum braking

force.

2.4.6.3. Obstacle Circumvent

Equipped with an industry-leading vehicle-level, the 3WWDZ-U60B agricultural drone possesses excellent spatial awareness. When obstacles are detected in the forward or backward flight direction, it can autonomously plan a path to bypass the obstacle from the left or right without the need for manual intervention.

To activate this feature: Open the "Obstacle Circumvent" on the “Setting” page (default closed) in the Agriculture Assistant APP.

2.4.6.4. Notes

1. When the obstacle avoidance function is turned on, the obstacle function will not be activated if the drone is in "S" flight mode or the drone is landing.
2. After the obstacle avoidance function is turned on, to ensure sufficient braking distance, the maximum flying speed is 8m/s.
3. The obstacles can not be detected when the vertical FOV is greater than 15°or less than -15°.
4. If the front obstacle distance is less than 8m, the drone will be braked immediately and enter Safe Mode. The drone cannot be controlled to fly forward or turn left/right. The restriction can be released when toggling the stick in the opposite direction.
5. The obstacle avoidance function will not be activated during taking-off, landing or line changing.
6. When the obstacle disappears, the drone will be in the protection mode for 2s, after which it will gradually lift the speed limit.

2.4.6.5. Description of Typical Obstacle Avoidance Scenarios

Trees, Poles: obstacle avoidance can detect the obstacle within 25m, and continuously show warning with the distance. When the distance is less than 20m, the drone will brake

automatically to ensure safety.

Wires: Taking the 1.5cm-diameter wire as an example, as the reflection of the wire is poor, is able to detect the wire 13m away while the drone is flying right towards the wire at a speed of 3m/s. The thinner the wire or the higher the flight speed is, the poorer the obstacle avoidance effect will be.

Notes:

1. When using the module, follow the local radio regulations and legal requirements.
2. For obstacles of different sizes and materials, the effective working range of the module will vary. For example, when detecting pedestrian, power cables, dry branches or conifers, the effective detection distance will decrease. Please operate carefully.
3. Modules are suitable for flat terrain and may cause false alarms when the slop angle is large.
4. When the surface beneath the drone is less than 1.5m, it is prone to cause false alarms.
5. Never disassemble the module by yourself. Otherwise, the improper installation might cause malfunction .
6. Do not crush or squeeze the housing of the module.

2.4.7. RTK

2.4.7.1. Introduction

The positioning accuracy of RTK can reach centimeter level, which improves the precision of plant protection operation. When RTK is started and GNSS signal is good, the aircraft will start the dual antenna direction finding function, which not only has higher directional accuracy, but also backs up with the magnetic compass directional function to further improve flight reliability.

2.4.7.2. RTK Sky Side Settings

3WWDZ-U60B uses a standard network version RTK. The default data source is Qianxun. No special configuration is required.

Pay special attention to:

1. Always keep the remote control open and connected to the Internet during use.

2. Take off only when the RTK status is Fixed Solution.

3. Maintenance and Common Troubleshooting

3.1. RC Maintenance & Precaution

- The RC needs to be wiped regularly to keep it clean. Keep the RC from water, agrochemical and dust.；
- Please fold the antenna after use to avoid damage；
- If the drone cannot hover and keeps flying in one direction when the control stick is at the central position, the control stick of the RC needs to be calibrated.

3.2. Drone Maintenance & Precaution

- Delicate electronic components are inside the drone. Do not soak the drone in water when cleaning；
- Regular inspection of components is required. Make sure the screws are fastened at all the joints；
- During transportation, make sure to properly fold the arms so that the motor base is placed on the folding structure；
- If the structural parts (such as frames, arms, landing gears) are damaged, please contact the after-sales service for replacement.

3.3. Motor Maintenance & Precaution

The working environment of agricultural plant protection drones'motor is harsh.

Water mist, liquid and agrochemical residue are the main factors causing damage.

Therefore, it is necessary to:

- Clean the housing of the motor with a warm cloth after the operation. Remove the

residue on the surface, and do not flush the inside of the motor with high-pressure water. Prevent water from leaking into the motor, which will shorten the service life；

- Check the motor regularly. When the resistance of the motor is high, the sound is abnormal or the gap between the motor and the motor base becomes large,please contact after-sales immediately and maintain according to the instructions by the after-sales.

3.4. Propeller Maintenance & Precaution

- If the propeller cracks or is damaged, please replace it in time. Otherwise, it will not have enough lifting power and the drone will be unstable, which will cause safety problems.；
- Pay attention to the marking on the propellers when installing them. Motor No.1 and No.3 should match "CCW" propellers, and motor No.2 and No.4 should match "CW" propellers；
- Clean up agrochemical residues after finishing the operation；
- Insert the propeller into the propeller holder during transportation.

3.5. Battery Maintenance & Precaution

3.5.1. UPS

3WWDZ-U60B agriculture drone adopts a 2025 new flight control system with built-in backup battery, which can maintain the normal operation of the flight control system for 5 minutes after the main power battery is powered off, effectively avoiding the waste of flight control restart and GNSS star search time.

3.5.1.1. Specification Parameters

No.	Item	Specification Parameters
1	Cell Type	Rechargeable Lithium-Ion Battery
2	Individual Cell Voltage	3.7V
3	Capacity	2500mAh
4	Discharge	-20℃~55℃

5	Charge	0℃~45℃
6	Storage (Within 3 Months)	-5℃~35℃

3.5.1.2. Notes

- When the agricultural drone is not used for a period of time, please connect the drone to the battery once a month for no less than 20min, in order to prevent the battery from discharging
- Dissemble the battery is strictly forbidden.
- It is strictly forbidden to throw the battery into the fire, otherwise, it may explode.
- Batteries should not be immersed in liquids such as freshwater, seawater, beverages, etc.。
- Using damaged batteries is prohibited.

3.5.2. Power Battery

- Avoid charging at a temperature of above 45°C；
- If the battery falls from height, it might cause a short circuit or even combustion；
- Make sure the battery is firmly connected to the drone, otherwise it may affect the performance of the drone；
- If corrosion or discoloration is found in the battery plug or the drone, wipe them with absolute alcohol in time and contact the after-sales department and follow the instructions；
- Check if batteries have dents, scratches and deformation on the surface regularly. Serious mechanical damage may lead to the risk of short circuits or combustion；
- Make sure all wires are not damaged. Severely damaged wires may cause short circuits or combustion.

Storage Notes:

- For storage of a large number of batteries, it is recommended to keep 30cm between each storage unit.

- Please avoid direct sunlight for more than 10min under any storage condition；
- Battery storage environment should be maintained at room temperature (15°C -35°C). Long-term storage above 35°C will accelerate the aging of the battery.Long-term storage at 0°C - 15°C may shorten the service time, but after several times of use at room temperature, the normal condition can be restored；
- Battery storage should avoid a humid environment. Keep storage environment dry and not ventilated.
- Battery storage locations should not be places where large items are often moved in and out to prevent accidental collisions.

Transportation Notes:

- It is recommended to use a temperature-resistant or flame-retardant box with a cover to store batteries. It is recommended to use the shockproof and tilt-proof sponge in the original box in other packages；
- Avoid putting the charging and discharging cables on the edge of the box to prevent accidentally being crushed, otherwise, it will lead to a short circuit when being used；
- During the operation, if the batteries are placed in a vehicle, ventilation should be guaranteed and avoid direct sunlight. The place exposed to direct sunlight in a sealed vehicle may have a temperature of above 80°C, which may cause the battery to burn.

Emergency Notes:

Adequate sand, fire extinguishers, and heat-insulating gloves should be prepared in places where batteries are stored, transported, or used.

When smoking and burning of batteries are found, the following measures should be taken immediately:

1. Battery is just starting to smoke (or has a burnt odor): Determine the part where a short circuit happens immediately. Lift the battery handle or charge-discharge cable (with heat-insulating gloves if necessary) and quickly drag the battery into the open room or outdoor. Completely bury the whole battery with sand (the charge-discharge cable needs to be buried in if there is smoking). Be careful to wait until the battery has completely cooled

down before taking it out (otherwise the battery may continue to smoke).

2. Batteries emit heavy smoke: immediately use sand and fire extinguishers to extinguish or bury the burning batteries while relocate the surrounding batteries and other flammable objects. If the surrounding flammable and explosive objects (liquids) cannot be removed, immediately use large quantities of water for rapid fire extinguishing and cooling.
3. Batteries are on fire: immediately use a large amount of water, fire extinguishers and sands to extinguish the fire (disconnect the power supply of surrounding electrical equipment first) while removing the surrounding batteries and other flammable material.

Notes： When using fire fighting equipment to extinguish fire, strictly follow the requirements and specifications of the local Fire Fighting authorities.

3.6. Plug Maintenance & Precaution

- The plug must be inserted completely when it is connected, otherwise, it will heat the plug and affect flight；
- The power plug and battery plug should be replaced if they have turned black or sparked.

3.7. Spray System Maintenance & Precaution

- Fill the water tank, pipe and nozzle with clean water to clean them when the operation is finished；
- Avoid mixing herbicides and pesticides, otherwise, it will be harmful to plants；
- In the case of long-term storage or transportation of the drone, always empty the tank；
- It is forbidden to run the water pump at high speed on an empty tank for long time；
- Avoid using powders and high-concentration emulsifiers to avoid blocking the spray pipe.

4. Transportation Instructions

Packaging method: The drone will be placed in the package box with flexible supporting material embedded in the package box while shipping.

Package Size: 1083mm*1083mm*905mm as shown below.

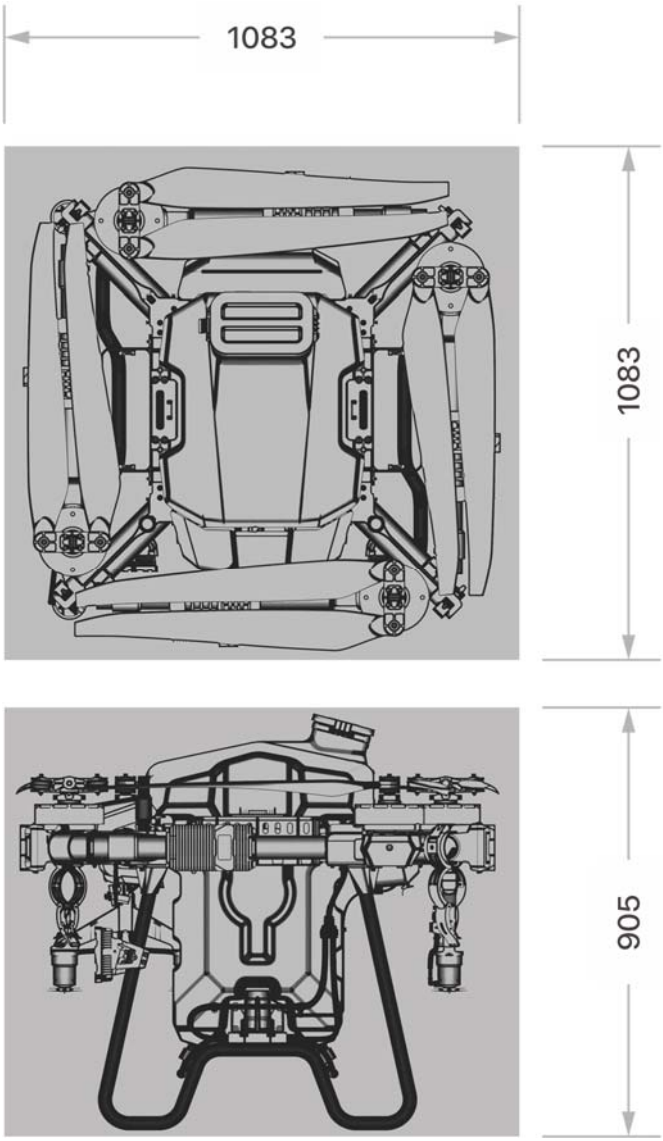

图 4-1

5. Hazards and Safety Checklist and Countermeasures

No.	Hazard	Countermeasures
1	Foldable Structure	When folding or unfolding the drone, be aware of the hand pinch hazard sign and keep your fingers away from the folding structure.
2	High-speed Rotating Propeller	Keep a safe distance from the drone and keep it away from people, animals or other obstacles during operation.
3	Charger While Being Charged	Place in a dedicated charging area and environment. Ensure good ventilation. When the charger is connected to power, make sure the charger is grounded.
4	Medicine Liquid Tank	Flush it with clean water after use and cover it with the lid,

		and store in a safe place.
5	Battery	Please strictly follow the relevant safety regulations and battery instructions, and be sure to pay attention to safety. Do not use the battery when it emits odor, heat, deformation, discoloration or any other abnormal phenomenon. If the electrolyte gets into the eye after the battery leaks, do not rub, rinse with water, and seek medical attention immediately.
6	Agrochemical	When using agrochemical, pay attention to the risk of different kinds of agrochemical. Fully understand the using methods in advance.
7	Flight	Do not operate in bad weather,such as strong wind (wind speed 8m/s or above), heavy rain (rainfall 25 mm/12 hours or above), snow, fog, etc.

6. Manufacturer Information

Manufacturer: Topxgun (Nanjing) Robotics Co., Ltd.

Address: No.1 Dongji Avenue, Jiangning District, Nanjing, China

Email:sales.global@topxgun.com

Phone：025-83798727

7. Appendix

7.1. Specification Parameters

Specification	Parameter
Package	
Package Size	1100*1100*930mm (Including peripheral waterproof film)
Net Weight	42.8kg
Gross Weight	56.9kg
Body Frame	
Symmetrical Motor Wheelbase	2200mm
Arm Length	850mm
Spraying Mode	

Dimension (Folded State)	948*919*855mm
Dimension (Unfolded State)	2960*1705*855mm (With unfolded propellers)
Dimension (Unfolded State)	1705*1695*855mm (Without propellers and nozzle, antenna included)
Nozzle Length （Working State）	1739mm (Maximum nozzle center distance)
Seeding Mode	
Dimension (Folded State)	948*919*907mm
Dimension (Unfolded State)	2960*1705*907mm (With unfolded propellers)
Dimension (Unfolded State)	1705*1695*907mm (Without propellers and nozzle, antenna included)
Power Motor	
Model	PX60
Stator Dimensions	136x30mm
KV value	68RPM/V
Power	10kW (Single motor)
Maximum Thrust	About 54kg (Single motor)
Weight	1905g (Single motor excluding propeller components, motor base, including power connectors)
Number of Motors	4
Power ESC	
Operating Voltage	51.8V （14S LiPo）
Rated Working Current	77A
Rated Power	4000W
Foldable Propeller	
Material	Nylon Carbon Fiber Composite Material
Diameter	56inch，1426mm
Pitch	20inch
Weight	925g (Including propeller clamp components)
Spraying System	
Tank	
Rated Capacity	60L
Weight	6.3kg (Including liquid pump and other accessories)

Pump	
Pump Type	Metering peristaltic pump
Number of Channels	2
Maximum Flow Rate	20L/min (Single pump)
Measurement Error	< 5%
Centrifugal Nozzle	
Rated Voltage	51.8V
Protection Level	IP67
Maximum Atomization Capacity	10L/min (Single pump)
Spray Range	6~10m
Recommended Spray Range	8m
Recommended Operating Temperature	0℃~40℃
Atomization Particle Size	30μm~500μm
Seeding System SP-6（Optional）	
Tank Capacity	80L
Maximum Payload	65Kg
Weight	7.0kg (Including the tank, spreader and other components)
Feeding Mode	Ration by rolling feeder
Seeding Mode	Centrifugal disc spreading mode
Seed Range	5~8m
Recommended Operating Temperature	0℃~40℃
Package Size	840*580*480mm
4D Obstacle Avoidance	
Detection Range	1-100m
Using Condition	Flight relative altitude > 2.0m
Safe Distance	4.0m
Avoidance Direction	Front
Autonomous Obstacle Avoidance	Supported, autonomously avoids obstacles to the left right or above .
Protection Level	IP67

FPV Camera	
FOV	Horizontal 86°，Vertical 52°
Resolution Ratio	720P
Flight Parameter	
Drone Weight (With Battery)	59.6kg (Spraying mode) 61.5kg (Seeding mode)
Rated Take Off Weight	119.6kg (Spraying mode) 126.5kg (Seeding mode)
Maximum Take Off Weight	＜150kg
Hover Accuracy（GNSS signal properly）	Horizontal ± 1.0m，Vertical ± 0.5 m
	Horizontal ± 10 cm，Vertical ± 10 cm（RTK started）
	Vertical ± 0.1m（ Started）
Hover Time*	≥6.0min（Take-off weight 119.6kg &2*20Ah batteries） ≥15.0min（Take-off weight 59.6kg &2*20Ah batteries）
*The hover time is measured near sea level, when the wind speed is less than 3m/s, and the ambient temperature is 25°C.	
Maximum Flight Speed	13.8m/s
Maximum Operation Speed	10m/s
Operational Hourly Productivity	28.8ha/h （Take operation speed 10m/s，spread range 8m as example）
Distance Limit	1000m
Maximum Take-off Altitude	2000m
Recommended Operating Ambient Temperature	0~40℃
Flight Control System	
Model	TIA2025
Input Voltage	30~60.9V
Rated Power	20W (Excluding peripherals , water pump, etc.)
Interface Type	CANBus、RS485、PWM、USB 等
Protection Level	IP67 (after fastening the outer joint)
Operation Environment	-10℃~45℃
Remote Control	
Model	TC2S
Frequency	2.400-2.4835GHz

Signal Effective Distance (no interference, no obstruction)	Maximum communication distance: 10km; image transmission distance: 3km (plant protection environment)
RTK High Accuracy Mapping	Support
Mapping Accuracy	RTK started(in fixed solution)：horizontal：±0.1m；vertical：±0.1m
Screen Size	7inch
Battery Voltage	3.7V (Rechargeable lithium battery)
Battery Capacity	20000mAh
Time of Duration	6-8h
Weight	About 1120g
Size	280x195x101mm
GNSS System	
Hover Accuracy (RMS)	RTK not started： horizontal： ±0.6m； vertical ±0.3 m
	RTK started (in fixed solution)：horizontal：±0.1m；vertical：±0.1m
Orientation Accuracy (RMS)	0.4°
Charger（TC9002P）	
Input Power	AC 220V~240V
Input Voltage Frequency	50/60Hz
Output Voltage	DC 61.0V（Max）
Output Current	165A（Max）
Output Power	9000W（Max）
Number of Channel	Dual Channel
Net Weight	18.7kg
Gross Weight	19.6kg
Size	430*320*300mm
Package Size	480*370*350mm
Secondary Lithium-ion Battery（ZAB1420-03**）**	
Voltage	53.2V
Capacity	20000mAh
Discharge Rate	10C

Charge Rate	5C
Protection Level	IP56 (With batteries installed to the drone)
Battery Life	1000 cycles (Capacity will be attenuated, no limit to use)
Weight	About 8.1kg (With 2 batteries installed during flight)
Size	139*240*316mm
Secondary Lithium-ion Battery（TB1420S**）**	
Voltage	52.5V
Capacity	20000mAh
Discharge Rate	8C
Charge Rate	4C
Protection Level	IP56 (With batteries installed to the drone)
Battery Life	1000 cycles (Capacity will be attenuated, no limit to use)
Weight	About 8.1kg (With 2 batteries installed during flight)

This device has been tested and found to comply with the limits for a Class B digital device, pursuant to Part 15 of the FCC Rules. These limits are designed to provide reasonable protection against harmful interference in a residential installation. This device generates, uses and can radiate radio frequency energy and, if not installed and used in accordance with the instructions, may cause harmful interference to radio communications.
However, there is no guarantee that interference will not occur in a particular installation. If this device does cause harmful interference to radio or television reception, which can be determined by turning the device off and on, the user is encouraged to try to correct the interference by one or more of the following measures:
--Reorient or relocate the receiving antenna.
--Increase the separation between the device and receiver.
--Connect the device into an outlet on a circuit different from that to which the receiver is connected.
--Consult the dealer or an experienced radio/TV technician for help

Changes or modifications not expressly approved by the party responsible for compliance could void the user's authority to operate the equipment

FCC Radiation Exposure Statement
The antennas used for this transmitter must be installed to provide a separation distance of at least 20 cm from all persons and must not be co-located for operating in conjunction with any other antenna or transmitter.