TS-3001 manual

Size Chart:

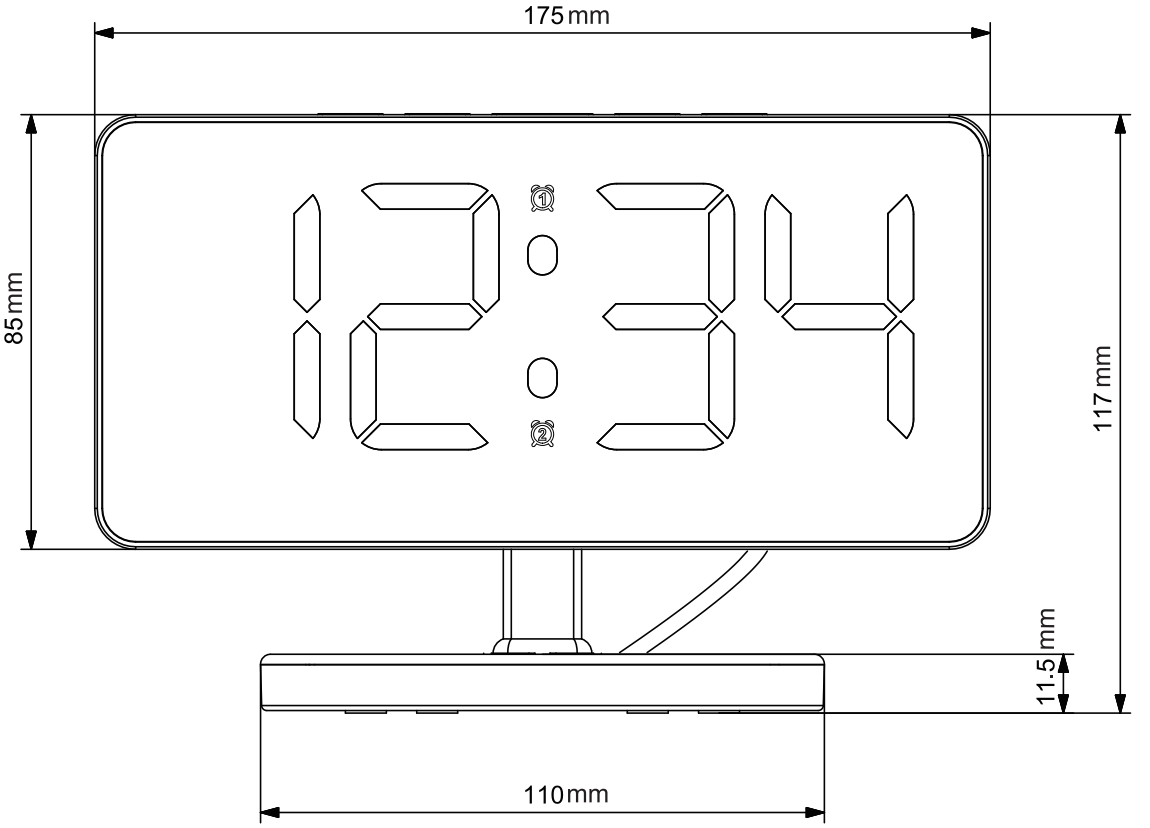

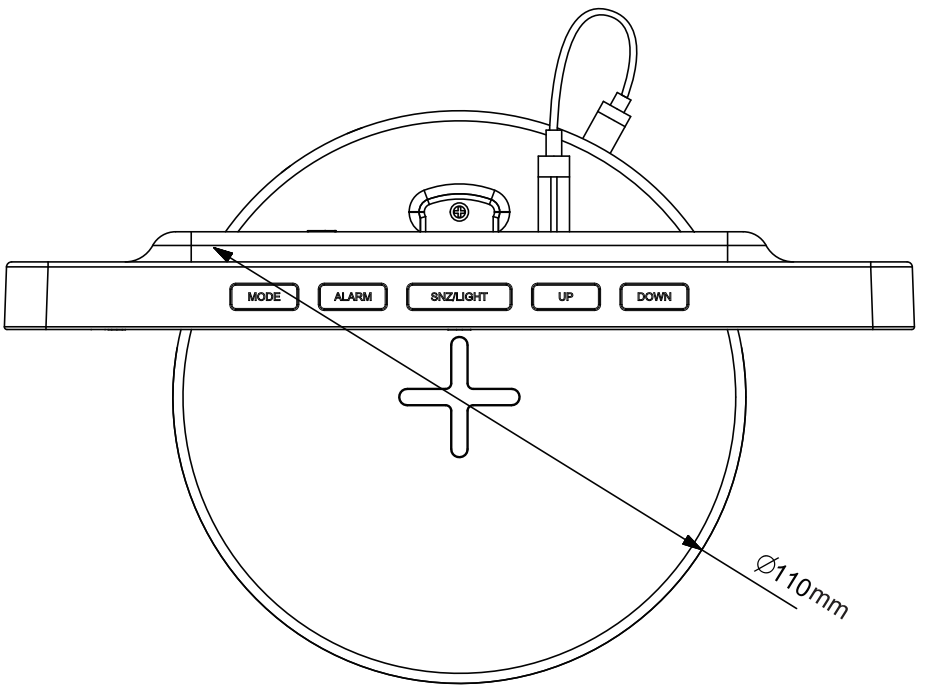

Full display diagram:

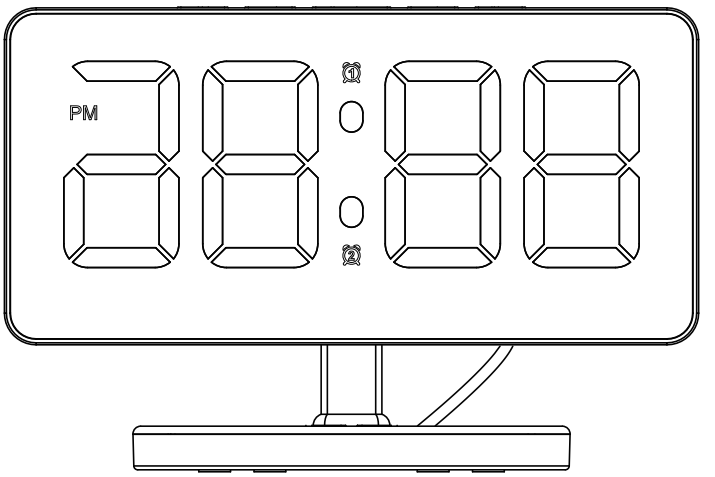

Display interface and button indication diagram:

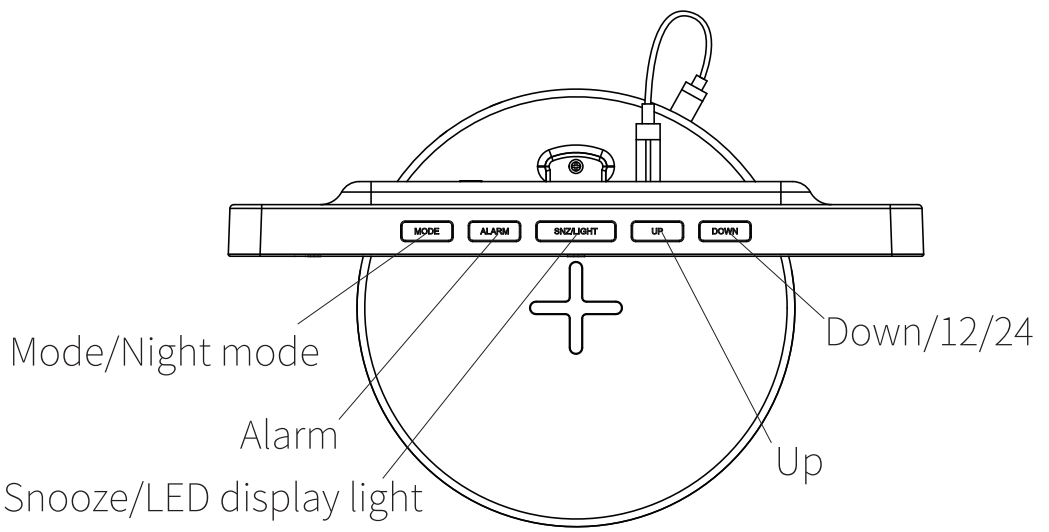

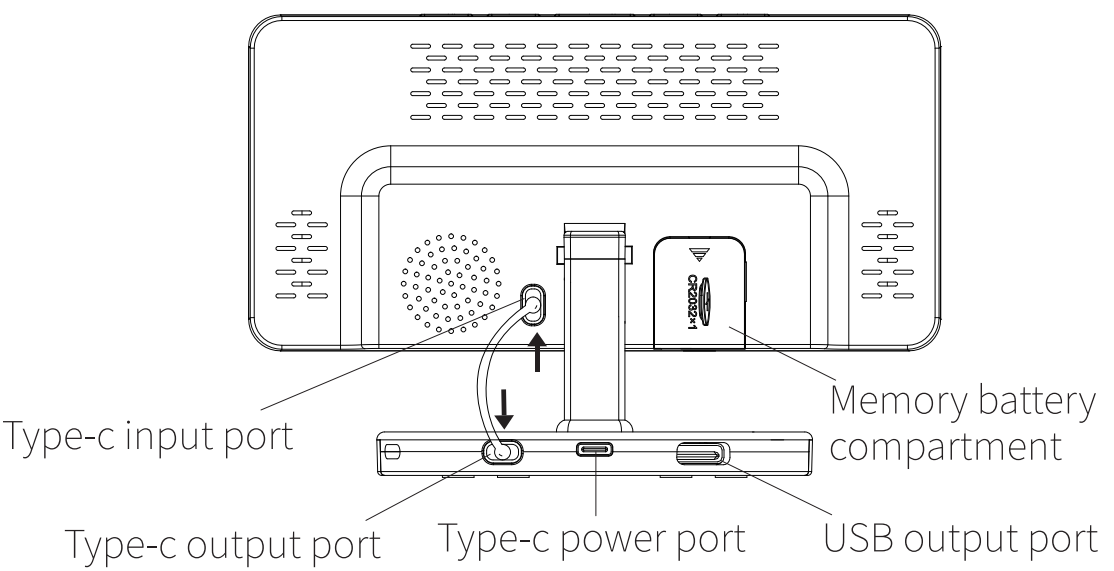

Thank you for purchasing TS-3001 Wireless Charging Night Light Alarm Clock, please read the following instructions before using this product:

1.Assembly diagram:

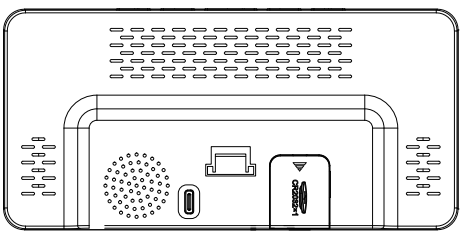

①Back of the display screen

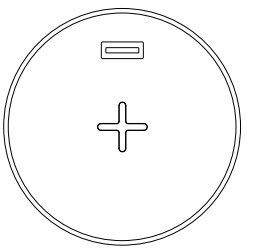

②Wireless charger

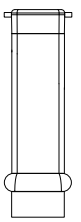

③Bracket

④TYPE-C connection power cable

Step 1: Insert the bracket into the back of the display screen from bottom to top, as shown in the figure:

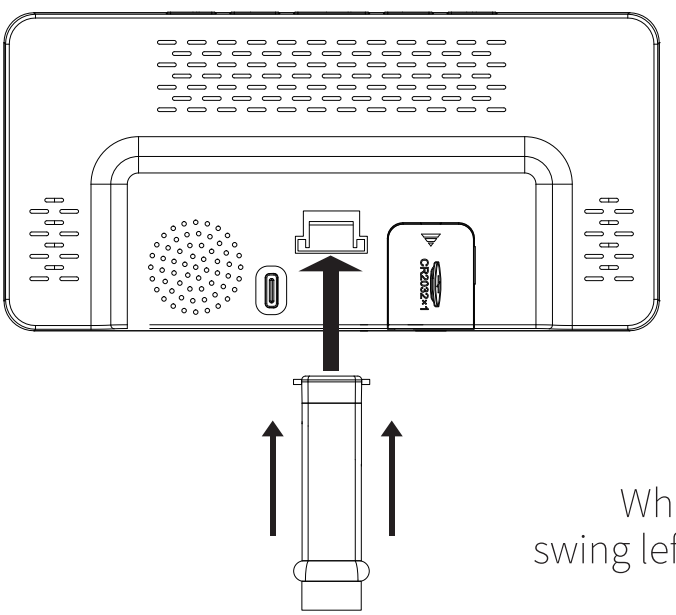

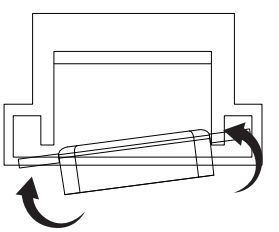

Swinging left and right for easier insertion upwards

When disassembly is required, swing left and right to extract downwards

Step 2: Insert the bracket into the wireless charger, as shown in the figure:

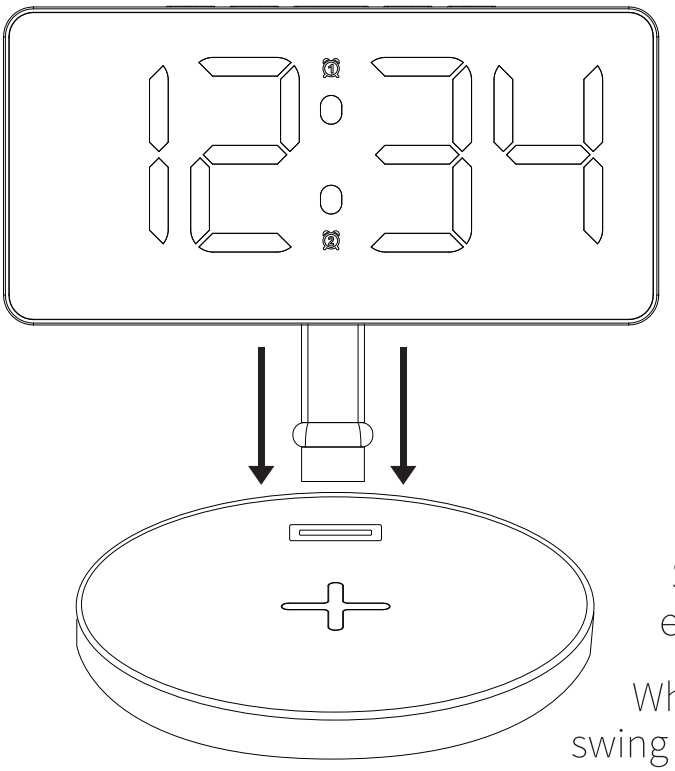

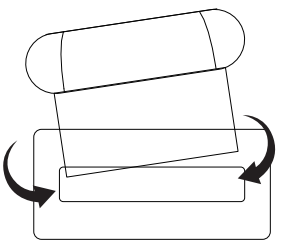

Swinging left and right for easier insertion downwards

When disassembly is required, swing left and right to extract upwards

Step 3: Connect the Type-c input port on the back of the display and the Type-c output port of the wireless charger with a Type-c connection power cable:

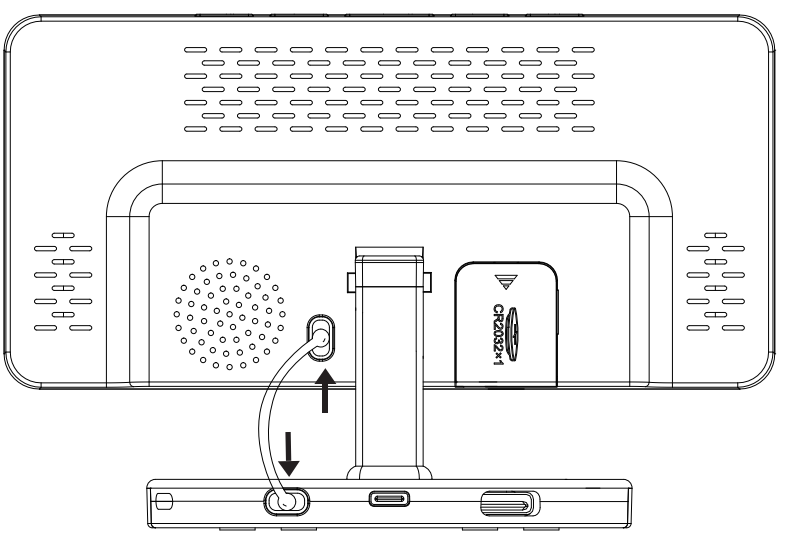

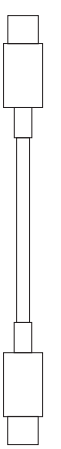

Type-c adapter cable

*After assembling according to the above steps, you can access the power line to supply power to use the product .

2.Main Functions:

▶Time display (12/24 hour format selectable)

▶Two groups of alarm clocks (Alarm 1 default 6:00, alarm 2 default 13:00)

▶Snooze function (Snooze time default 5 minutes, 5 ~ 60 minutes can be set)

▶Six levels of brightness (The default is the brightest light)

▶RGB night light

▶Night mode

▶Wireless charging function (5W/7.5W/10W/15W MAX)

3.Power supply method:

TYPE-C power cord

CR2032 battery (Battery is not used for power supply, only for memorizing time settings)

Note: The product is shipped without battery.

Default display after power on:

Time: 0:00

Time format: 24-hour format

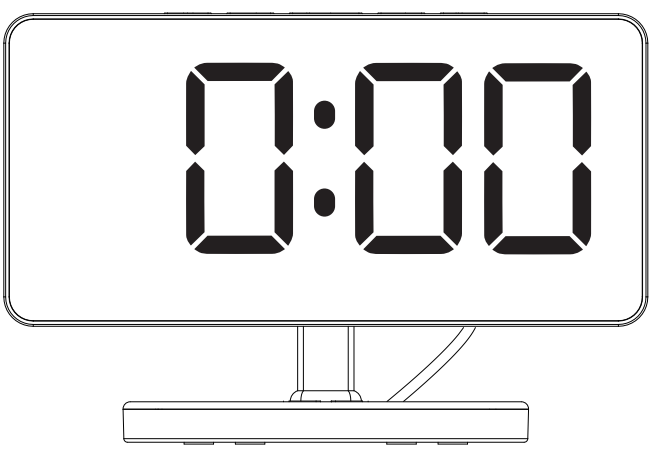

Power on reset initial interface display

4.Time Setting:

In the time display mode,long press the "MODE" button to enter the time setting mode.After entering, the setting items are displayed and flashing , the setting sequence is: 12/24 hour format selectable → hour setting → minute setting → exit.

When setting 12/24 hour format, short press "UP" or "DOWN" button to switch. When setting the hours and minutes, short press "UP" button to increase one step, Long press "UP"button to increase fast (8 steps/ second) , short press "DOWN" button to decrease one step, long press "DOWN" button to decrease fast (8 steps/ second) . In the time display mode,short press the “DOWN” button to switch the 12/24 hour format.

Note: If there is no operation for 10 seconds during the setting process, the setting will be saved automatically and the setting mode will be exited.

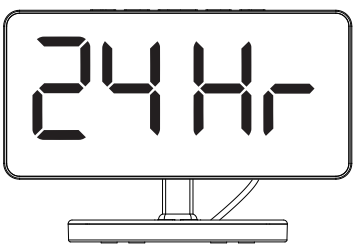

12/24 hour format selectable

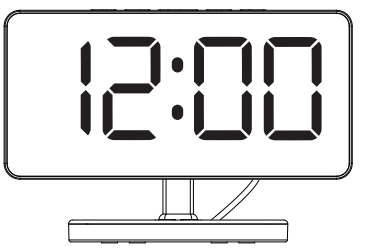

hour setting

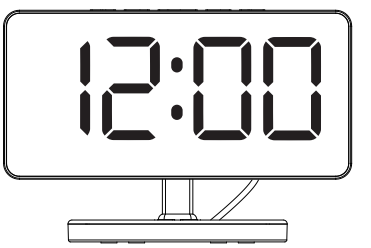

minute setting

5.Alarm Setting:

In the time display mode, short press "ALARM" button to turn on or off the alarm clock. When the alarm clock is turned on, the corresponding alarm icon will be displayed. The setting sequence is: alarm 1 on- alarm 2 on- Alarm 1 and alarm 2 are turned on at the same time - off.

Alarm 1 on

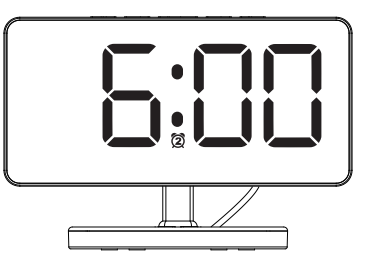

Alarm 2 on

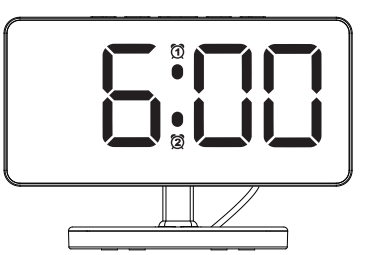

Alarm 1 and alarm 2
are turned on at the same time

In the time display mode, long press "ALARM" button to enter the alarm setting mode, after entering, the setting items are displayed and flashing, the setting sequence is: alarm 1 hour setting → alarm 1 minute setting → alarm 1 snooze time setting → alarm 2 hour setting → alarm 2 minute setting → alarm 2 snooze time setting → exit.

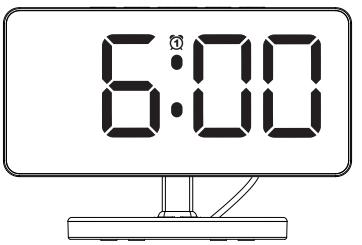

Alarm 1 hour setting

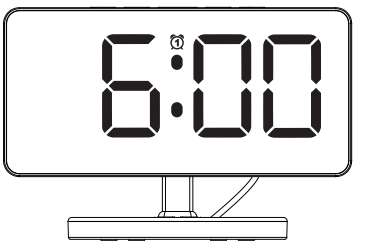

Alarm 1 minute setting

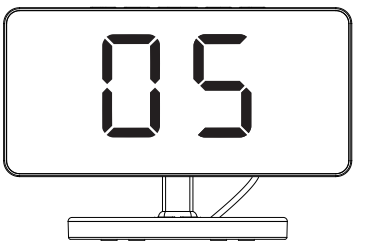

Alarm 1 snooze time setting

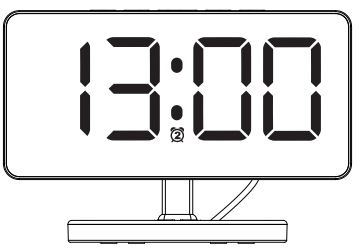

Alarm 2 hour setting

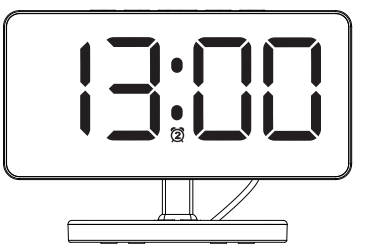

Alarm 2 minute setting

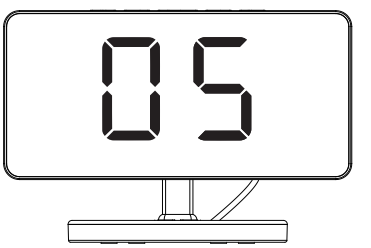

Alarm 2 snooze time setting

When setting the hours and minutes, short press "UP" button to increase one step, long press "UP"button to increase fast (8 steps/ second) , short press "DOWN" button to decrease one step, long press "DOWN" button to decrease fast (8 steps/ second) .

When setting snooze time (default 5 minutes, 5~60 minutes can be set) , short press "UP" button to increase one step, long press "UP"button to increase fast (8 steps/ second) , short press "DOWN" button to decrease one step, long press "DOWN" button to decrease fast (8 steps/ second) .

Note: If there is no operation for 10 seconds during the setting process, the setting will be saved automatically and the setting mode will be exited.

6.Snooze Function:

1. When the alarm beeps, short press "SNZ/LIGHT" button will enter snooze mode ,the corresponding alarm icon flashing. (snooze time default 5 minutes, 5~60 minutes can be set) .
2. When the snooze time is over, the alarm will beep again.
3. Stop the alarm: short press any other buttons execpt "SNZ/LIGHT" button, will stop the alarm or snooze.

7.Brightness adjustment function:

In the time display mode (The function is not available in snooze mode) , short press "SNZ/LIGHT" button to select the display brightness (default is 100% brightness) , the setting sequence is: 100% → 80% → 60% → 40% → 20% → 0%.

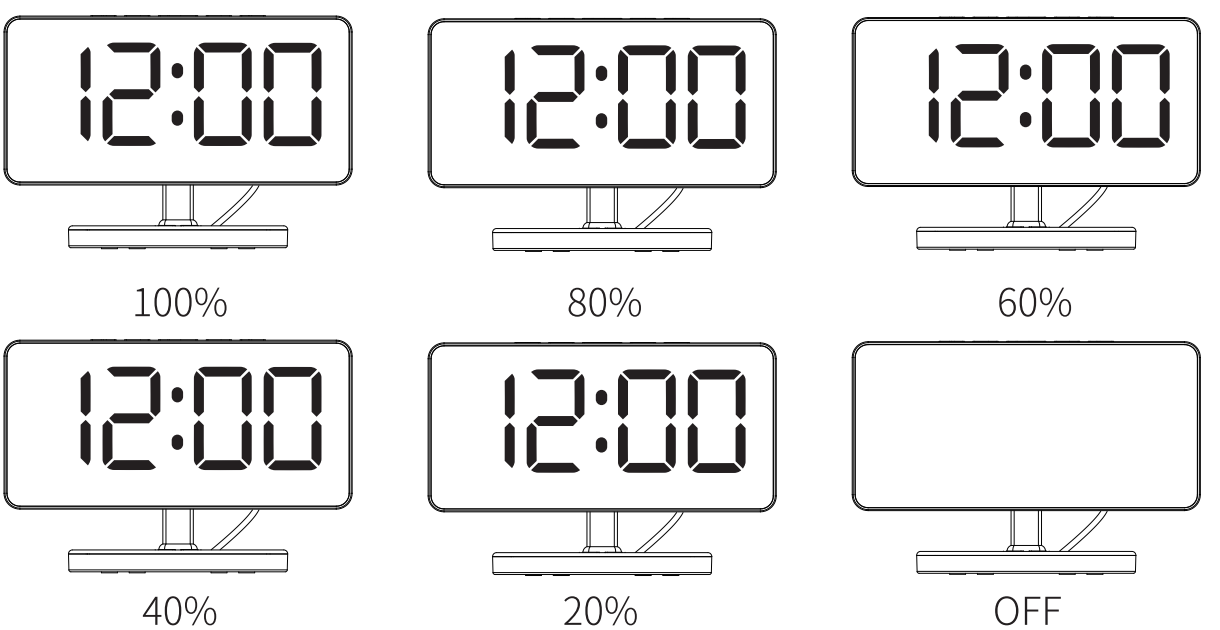

8.RGB night light function:

1.In the time display mode, short press " " button to select the RGB light mode, the setting sequence is: RGB Right to Left Flowing Slowly - RGB Right to Left Flowing Quickly → RGB Changing → blue → light blue → green → yellow → red → purple → white.

2.In the time display mode, long press " " button to adjust the brightness of the RGB light, the setting sequence is: bright - medium - dark - off, the default is bright.

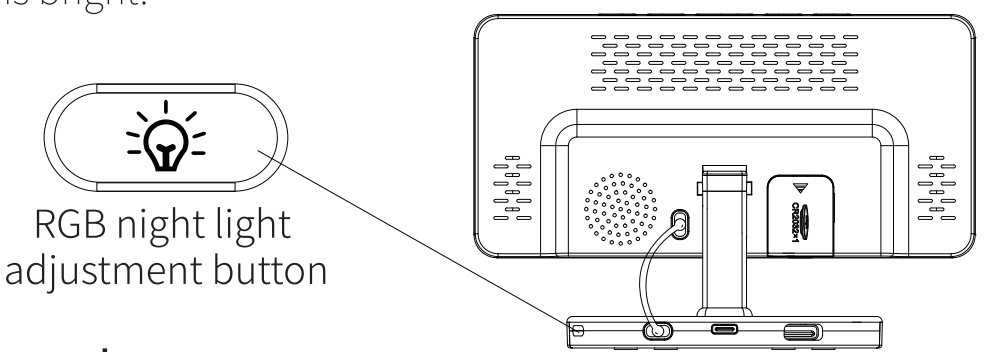

9.Night mode:

1. Night mode: LED light automatically enter into the low brightness display status at night (default is 18:00~6:00)

2. In the time display mode, short press the "MODE" button once to enter the night mode, the default off state (display OFF), short press "UP" button or "DOWN" button to turn on or turn off the night mode. ON means turn on the night mode, OFF means turn off the night mode.

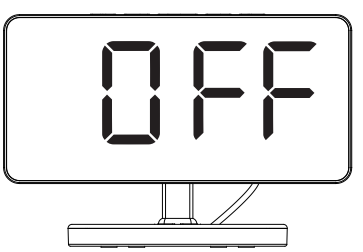

OFF

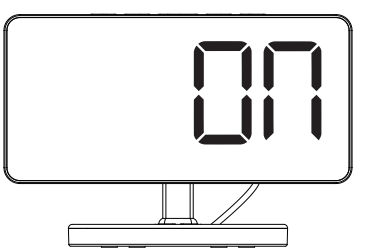

ON

3. When the night mode is on (the screen shows "ON") , long press the "MODE" button to enter the night mode setting, the setting sequence is: start hour → start minute → end hour → end minute.

At start hour and minute setting status, the upper point in the center of the screen is long bright. At end hour and minute setting status, the lower point in the center of the screen is long bright.

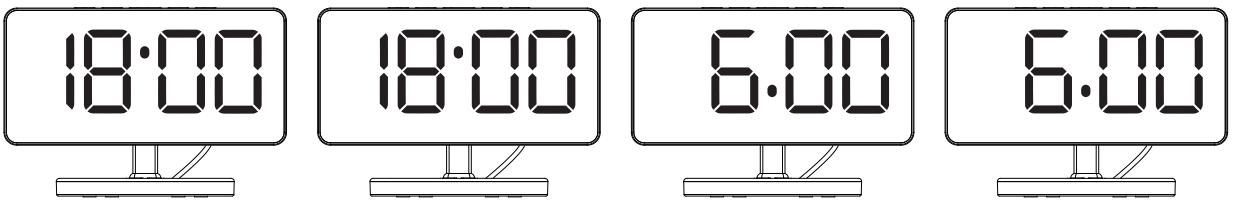

Start hour　　Start minute　　End hour　　End minute

10.Wireless charging function:

Wireless charging for phone: 5W/7.5W/10W/15W max.

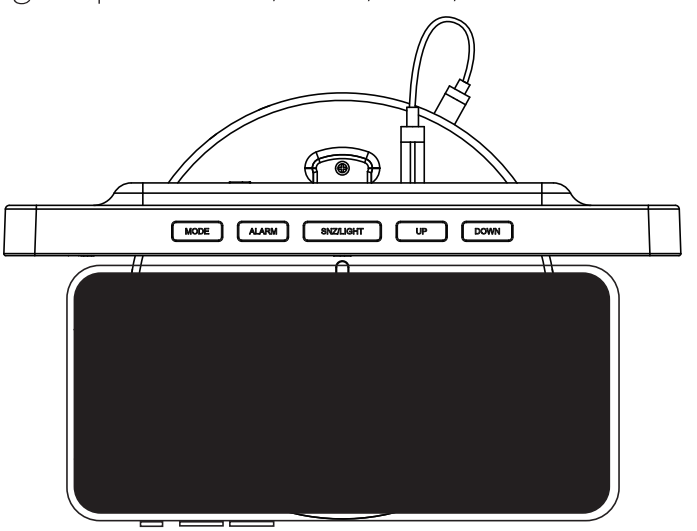

11. USB output function:

When using the TYPE-C power cable power supply, you can charge your cell phone or other electronic devices through the USB output.

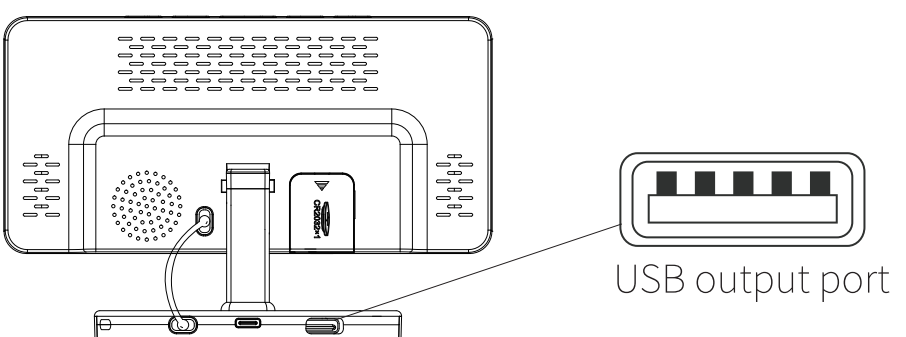

MADE IN CHINA

FCC Statement

This device complies with part 15 of the FCC Rules. Operation is subject to the following two conditions: (1) This device may not cause harmful interference, and (2) this device must accept any interference received, including interference that may cause undesired operation.

Note: This equipment has been tested and found to comply with the limits for a Class B digital device, pursuant to part 15 of the FCC Rules. These limits are designed to provide reasonable protection against harmful interference in a residential installation. This equipment generates, uses and can radiate radio frequency energy and, if not installed and used in accordance with the instructions, may cause harmful interference to radio communications. However, there is no guarantee that interference will not occur in a particular installation. If this equipment does cause harmful interference to radio or television reception, which can be determined by turning the equipment off and on, the user is encouraged to try to correct the interference by one or more of the following measures:

—Reorient or relocate the receiving antenna.

—Increase the separation between the equipment and receiver.

—Connect the equipment into an outlet on a circuit different from that to which the receiver is connected.

—Consult the dealer or an experienced radio/TV technician for help.

Note: The Grantee is not responsible for any changes or modifications not expressly approved by the party responsible for compliance. such modifications could void the user's authority to operate the equipment.

The device has been evaluated to meet general RF exposure requirement.

To maintain compliance with FCC's RF exposure guidelines, the distance must be at least 20 cm between the radiator and your body, and fully supported by the operating and installation configurations of the transmitter and its antenna(s).

TS-3001说明书

尺寸图：

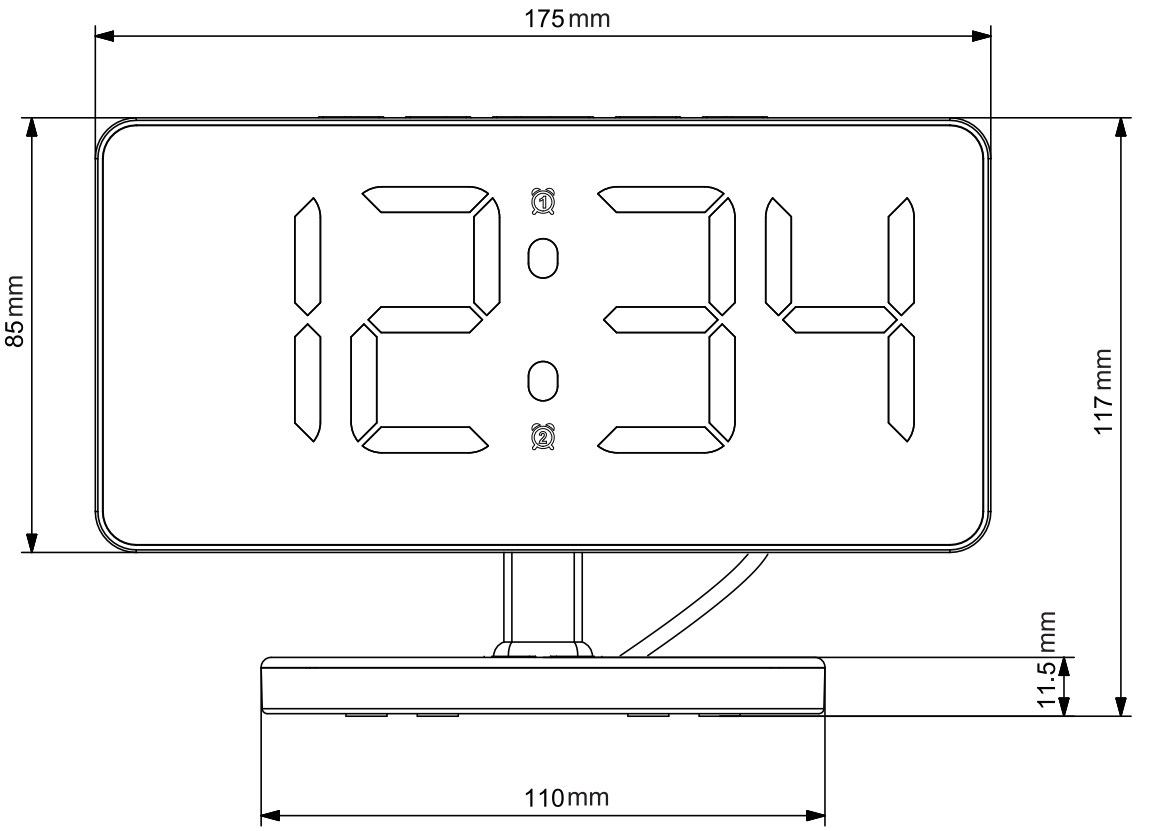

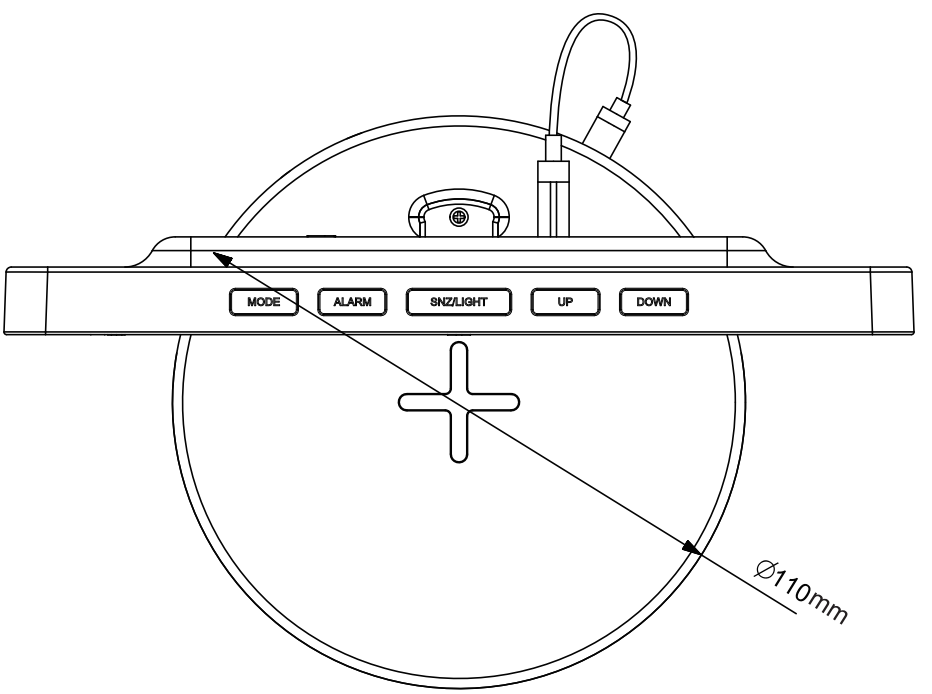

全显图：

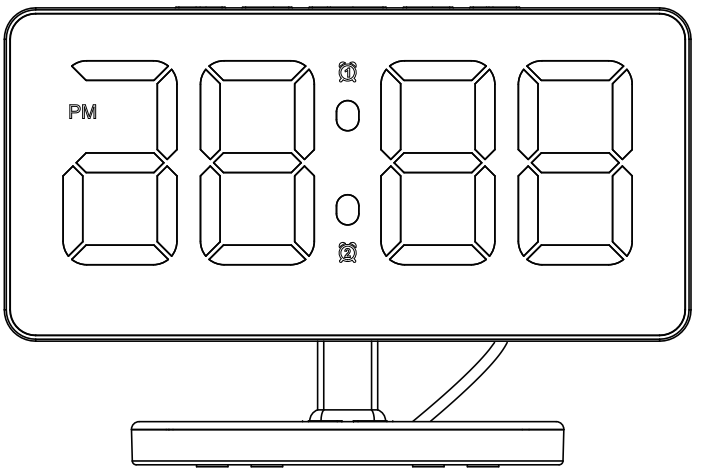
PM

按键指示图：

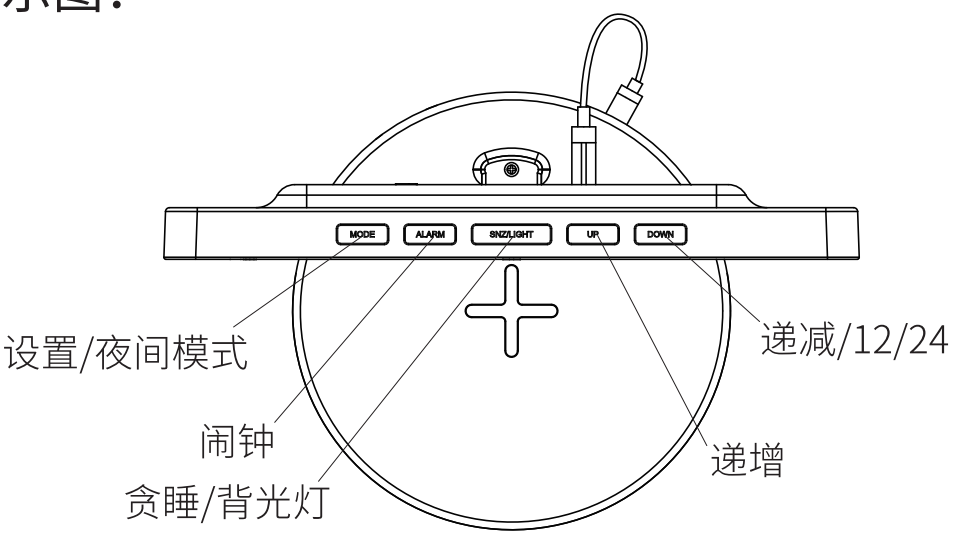
MODE
ALARM
SNZ/LIGHT
UP
DOWN
设置/夜间模式
闹钟
贪睡/背光灯
递减/12/24
递增

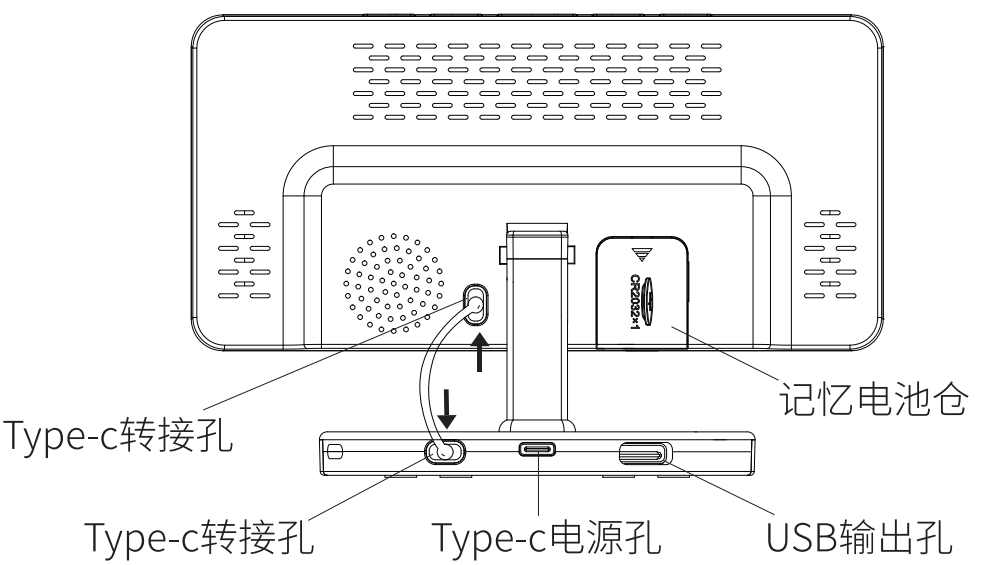
CR2032×1
记忆电池仓
Type-c转接孔
Type-c转接孔
Type-c电源孔
USB输出孔

感谢你购买TS-3001无线充小夜灯闹钟，请在使用该产品前阅读以下说明：

1.安装流程图：

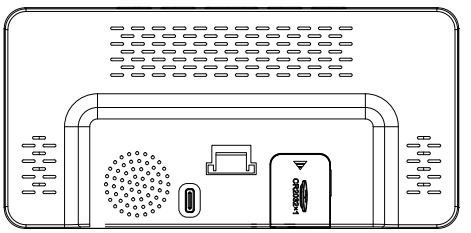

①显示屏背面

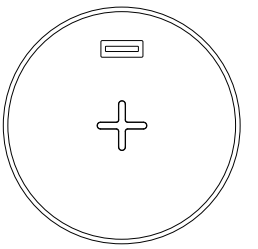

②无线充底座

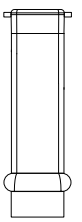

③支架

④Type-c转接线

步骤1：将支架从下往上嵌入显示屏背面，如图所示：

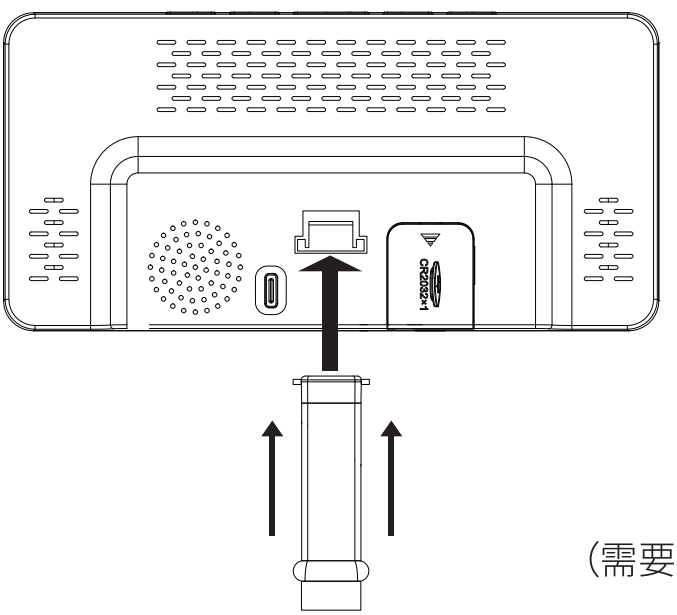

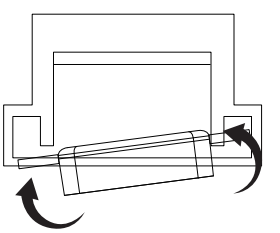

左右摆动向上嵌入更轻松
（需要拆解时，同样左右摆动向下抽出）

步骤2：将支架嵌入无线充底座，如图所示：

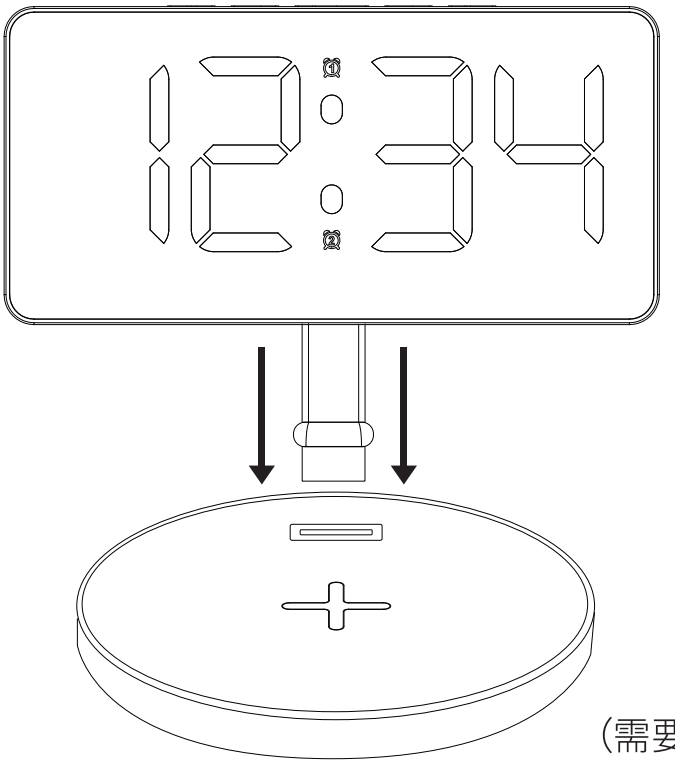

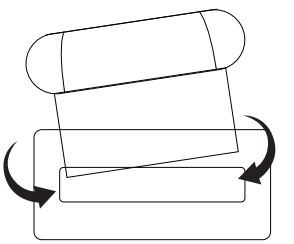

左右摆动向下嵌入更轻松
（需要拆解时，同样左右摆动向上抽出）

步骤3：用Type-c转接线将显示器和无线充底座连接，如图所示：

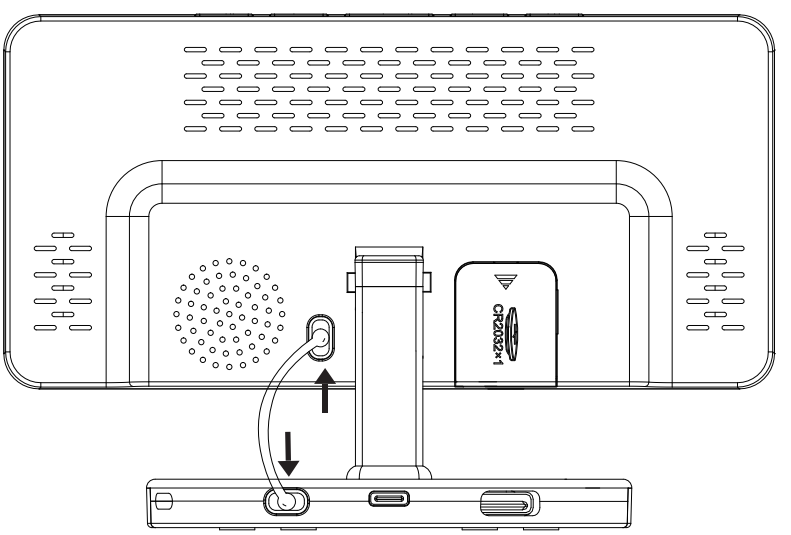

Type-c转接线

*按上述步骤安装完成后，即可接入电源线供电使用产品。

2.主要功能：

▶时间显示（可切换12/24小时制）

▶两组闹钟（闹钟1默认6:00，闹钟2默认13:00）

▶贪睡功能（贪睡时间默认5分钟，5~60分钟可设置）

▶六档亮度可调（默认最亮档）

▶RGB夜灯

▶夜间模式

▶无线充功能（5W/7.5W/10W/15W最大）

3.供电方式：

TYPE-C电源线

CR2032电池（电池不供电，仅记忆时间设置）

备注：发货不含电池

开机后默认显示:

时间：0:00

时间制式: 24小时制

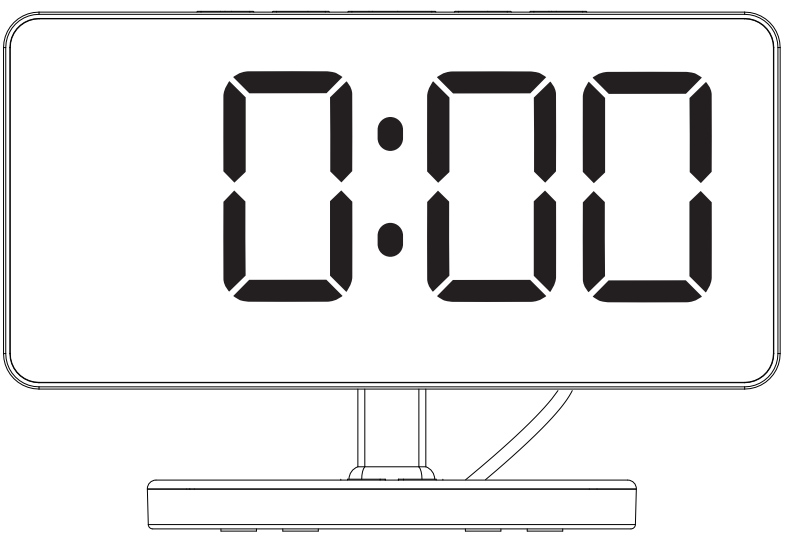

上电复位初始界面显示

4.时间设置：

在时间显示模式下，长按“MODE”键进入时间设置模式，进入后，其设置项目显示并闪烁，设置顺序为：12/24小时制设置-小时设置-分钟设置-退出。

设置12/24小时制时，短按“UP”或“DOWN”键切换。

设置小时和分钟时，短按“UP”键，加一，长按“UP”键，快加（8步/秒），短按“DOWN”键，减一，长按“DOWN”键，快减（8步/秒）。

在时间显示模式下，短按“DOWN”切换12/24小时制。

备注：在设置过程中10秒无操作，将自动保存设置并退出设置模式。

12/24小时制切换

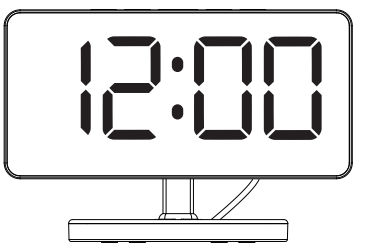

小时设置

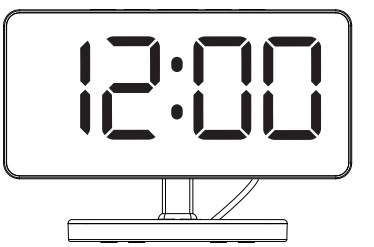

分钟设置

5.闹钟设置：

在时间显示模式下，短按“ALARM”键开启或关闭闹钟。开启时对应闹钟图标点亮，设置顺序为：闹钟1-闹钟2-闹钟1和闹钟2-关闭。

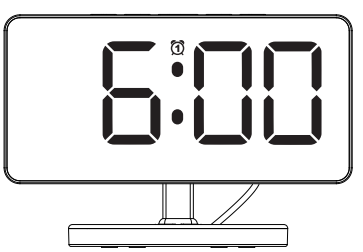

闹钟1开启

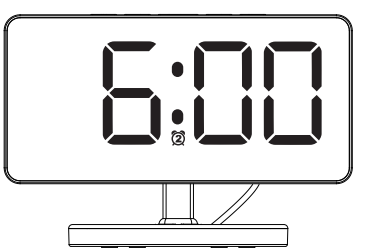

闹钟2开启

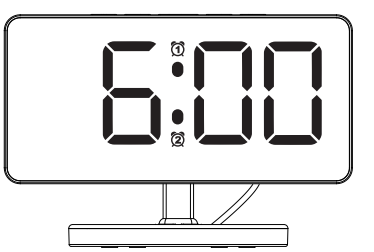

闹钟1和闹钟2同时开启

在时间显示模式下，长按“ALARM”键进入闹钟设置模式，进入后，其设置项目显示并闪烁，设置顺序为：闹钟1小时设置-闹钟1分钟设置-闹钟1贪睡时间设置-闹钟2小时设置-闹钟2分钟设置-闹钟2贪睡时间设置-退出。

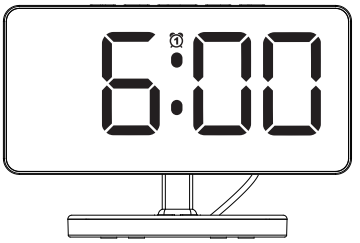

闹钟1小时设置

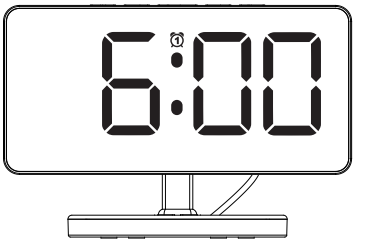

闹钟1分钟设置

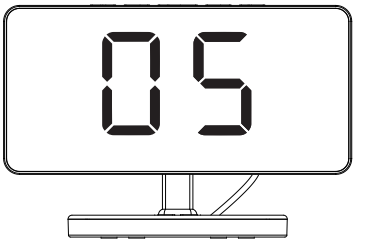

闹钟1贪睡时间设置

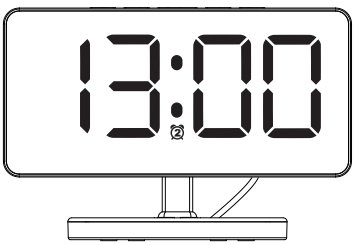

闹钟2小时设置

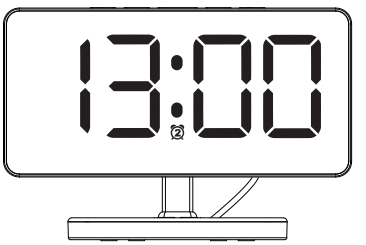

闹钟2分钟设置

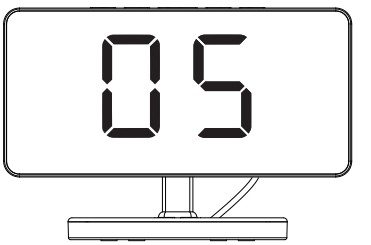

闹钟2贪睡时间设置

设置小时和分钟时，短按“UP”键，加一，长按“UP”键，快加（8步/秒），短按“DOWN”键，减一，长按“DOWN”键，快减（8步/秒）。

设置贪睡时间时（默认5分钟，5~60分钟可设置），短按“UP”键，加一，长按“UP”键，快加（8步/秒），短按“DOWN”键，减一，长按“DOWN”键，快减（8步/秒）。

备注：在设置过程中10秒无操作，将自动保存设置并退出设置模式。

6.贪睡功能：

1. 当闹钟响闹时，短按“SNZ/LIGHT”键会暂停响闹并进入贪睡模式，对应闹钟图标闪烁（贪睡时间默认5分钟，5~60分钟可设置）。
2. 当贪睡时间结束时，闹铃会再次响起。
3. 停止响闹：短按除“SNZ/LIGHT”以外其他键，将停止响闹。

7.亮度调节功能：

在时间显示模式下（贪睡模式下不能使用该功能），短按“SNZ/LIGHT”键切换时钟显示亮度（默认是最亮档），设置顺序为：100% → 80% → 60% → 40% → 20% → 0%。

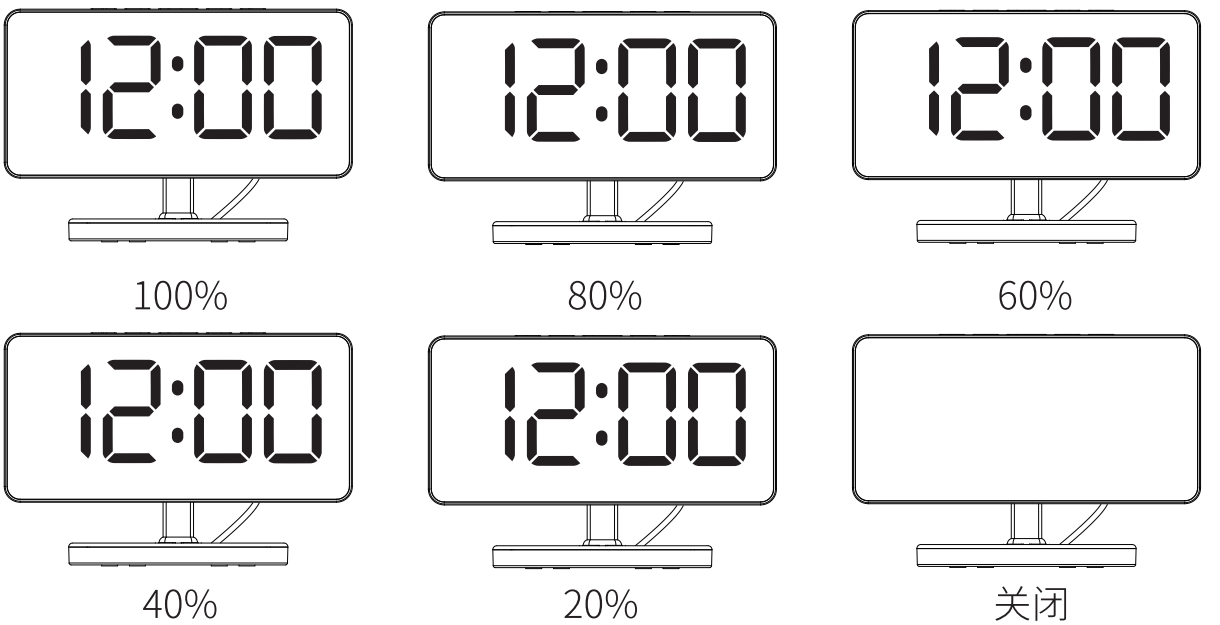

8.RGB夜灯功能：

1. 在时间显示模式下，短按无线充底座按键“ ”进行RGB灯模式切换，设置顺序为：RGB整体渐变（流水效果）→RGB从右往左变化（色带效果）→7色循环→蓝→浅蓝→绿→黄→红→ 紫→白。
2. 在时间显示模式下，长按无线充底座按键“ ”可调节RGB灯的亮度，调节顺序：明亮-中等-暗-关闭，默认为明亮档。

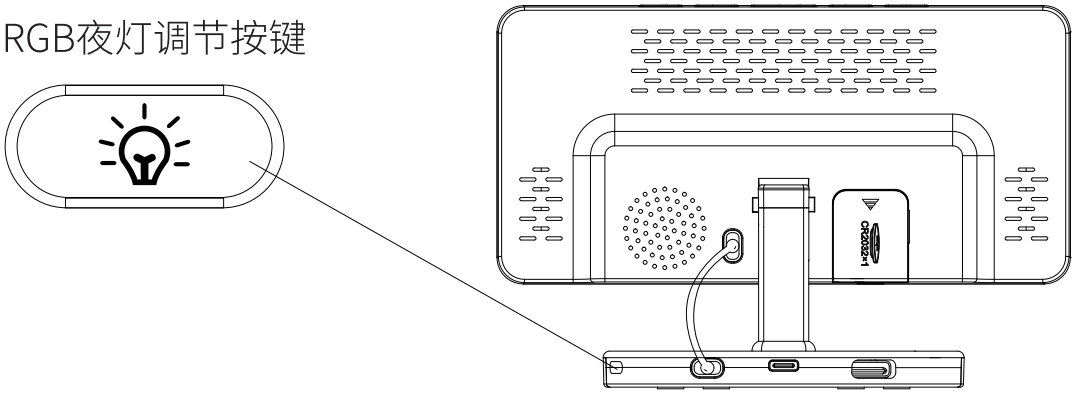

9.夜间模式：

1. 夜间模式：LED灯在夜间时间（默认是18:00~6:00）会自动变暗。
2. 在时间显示模式下，短按“MODE”键1次进入夜间模式，默认关闭状态（显示OFF），短按“UP”或者“DOWN”键开启或关闭夜间模式。ON表示开启夜间模式，OFF表示关闭夜间模式。

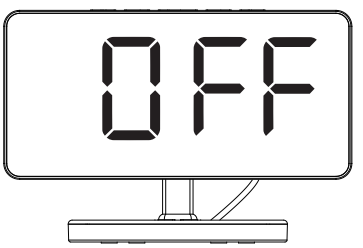

关闭

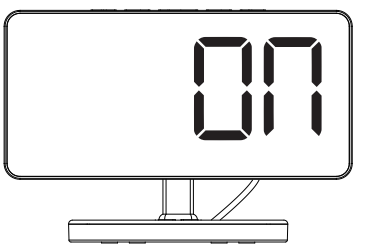

开启

3. 夜间模式开启时（屏幕显示“ON”），此时长按“MODE”键进入夜间模式设置，设置顺序是：起始时 → 起始分 → 结束时 → 结束分。
   起始时和起始分设置时，中间两个点上面的点长亮，结束时和结束分设置时，中间两个点下面的点长亮。

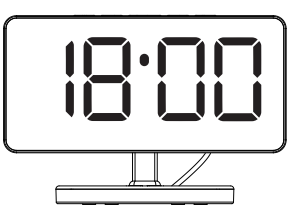

起始时

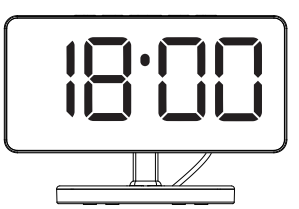

结束时

起始分

结束分

10.无线充功能：

手机无线充电：5W/7.5W/10W/15W最大。

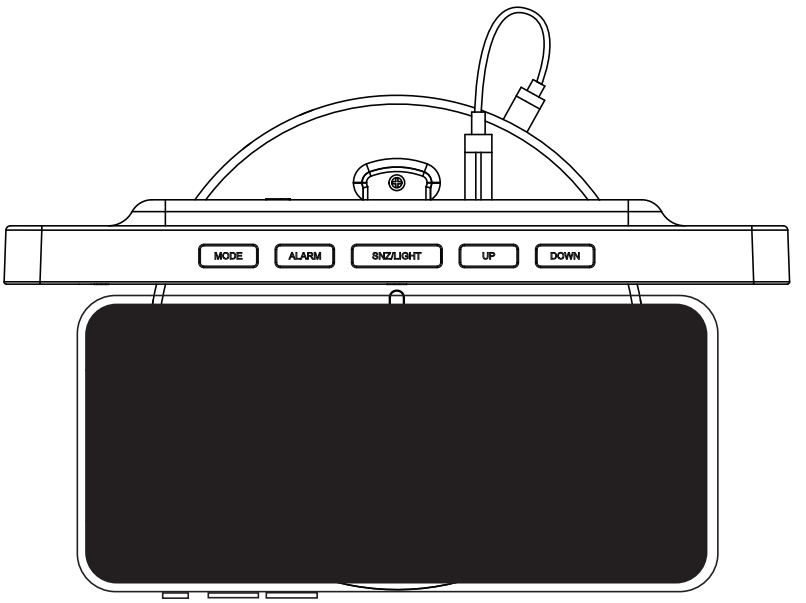

11.USB输出功能：

在使用TYPE-C电源线供电时，可以通过USB输出给手机或者其他电子设备充电。

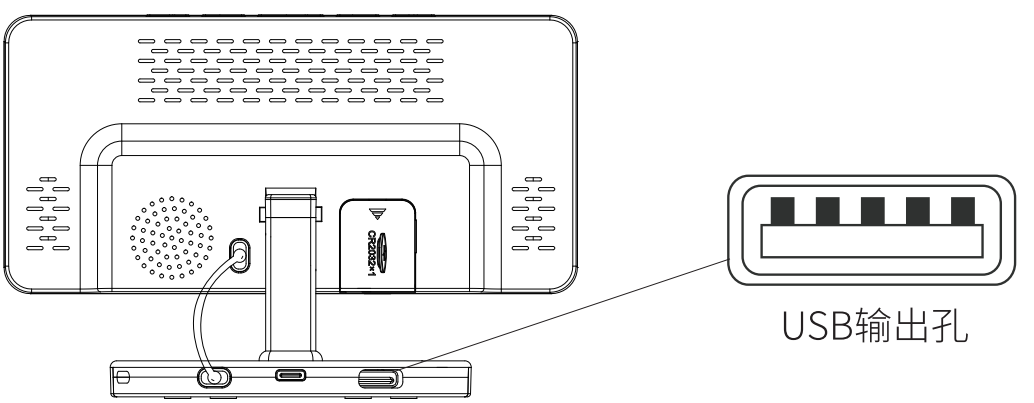

FC RoHS CE

MADE IN CHINA