深圳市肯特新工业技术有限公司

承 認 書

SPECIFICATION FOR APPROVAL

客 戶： 捷渡中国
Custome

项目名： S1
Project

品 名： FPC ANT
Description

料 號： W2818L-F1C1B-080-U
Part Number

日 期： 2023 年 11 月 23 日
Date Year Month Day

承 認 人 簽 章 Signature		
制定 **Responsible**	审核 **Approve**	客户确认 **Confirm**
	Contact: 18688745790 TEL:+86-755-23025852	

UNLESS OTHER SPECIFIED TOLERANCES ON : **X = ±1 X.X = ±0.1 X.XX = ±0.01** **ANGLES = ± HOLE DIA = ±**		肯特新工业技术有限公司 KINTER NEW INDUSTRIAL TECHNOLOGY CO., LTD
SCALE :	**UNIT : mm**	**THIS DRAWINGS AND SPECIFICATIONS ARE THE PROPERTY OF KINTER NEW INDUSTRIAL TECHNOLOGY CO.,LTD. AND SHALL NOT BE REPRODUCED OR USED AS THE BASIS FOR THE MANUFACTURE OR SALE OF APPARATUS OR DEVICES WITHOUT PERMISSION.**
DRAWN BY : 周景峰	**CHECKED BY :** 王浩	
DESIGNED BY : 李谋月	**APPROVED BY :** 易珂湘	
TITLE : W2818L-F1C1B-080-U Specification	**DOCUMENT NO.**	**PAGE REV. P2**

1. Electrical Specification :

*Those specifications were specially defined for 捷渡中国 **S1** WIFI model, and all characteristics were measured under the model's handset testing jig .*

1-1. Frequency Band:

Frequency Band	MHz
Wi-Fi/BT	2.4G&5G

1-2. Impedance

50 ohm nominal

2. VSWR

2-1 Measuring Method

1. A 50Ωcoaxial cable is connected to the antenna. Then this cable is connected to a network analyzer to measure the VSWR,
2. Keeping this jig away from metal at least 20cm.

2-2 Measurement frequency points and VSWR value

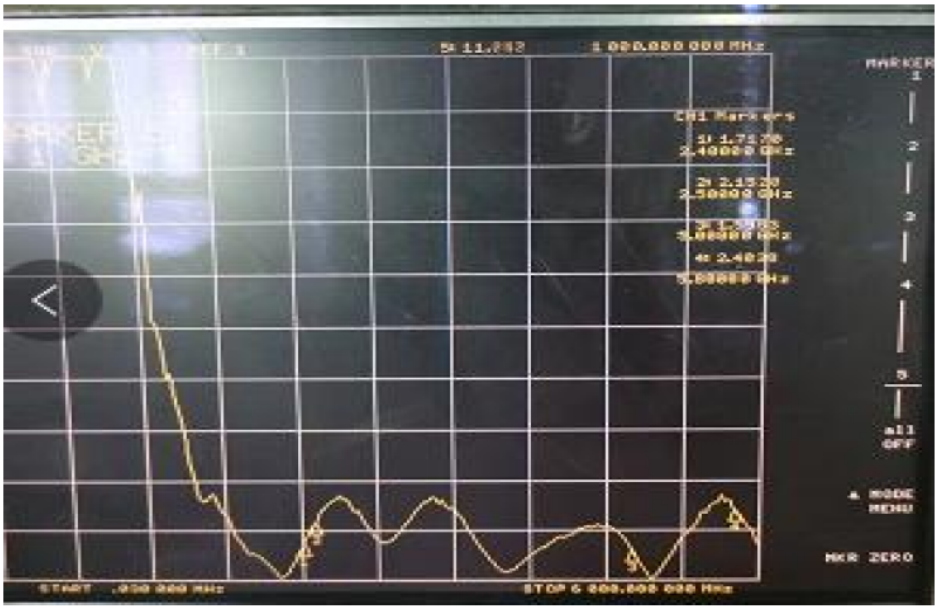

Frequency (MHz)	2400	2500	5000	5800
VSWR	1.66	2.1	1.5	2.18

THIS DRAWINGS AND SPECIFICATIONS ARE THE PROPERTY OF KINTER NEW INDUSTRIAL TECHNOLOGY CO.,LTD. AND SHALL NOT BE REPRODUCED OR USED AS THE BASIS FOR THE MANUFACTURE OR SALE OF APPARATUS OR DEVICES WITHOUT PERMISSION.

3. Efficiency and Gain

■ **量测仪器:** 微波暗室，Agilent 网络分析仪，Agilent 频谱分析仪，8960 综合测试仪，标准天线。

■ **微波暗室说明:**

这是本公司设置在深圳的微波暗室，本微波暗室是属于一套远场量测系统,暗室的大小为 5.0 米 x3.0 米 x3.0 米 ，静区尺寸(Quiet zone)大小为 15 厘米 x15 厘米 x15 厘米。

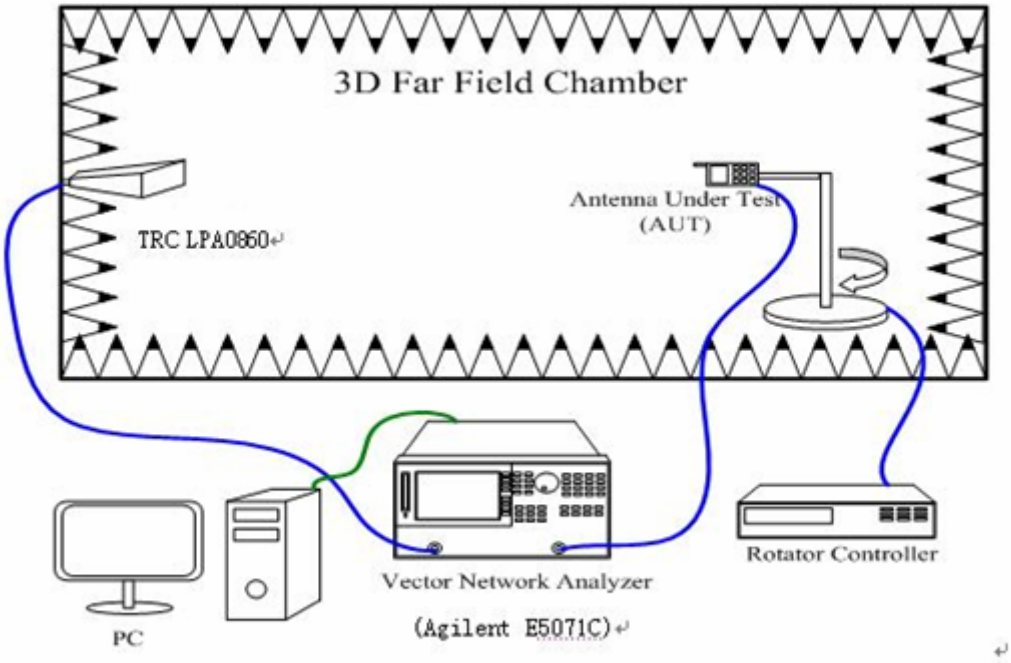

图. 1. 微波暗室内部仪器设置 r.

图. 1 为微波暗室内的仪器设置及网络分析仪的联接图，发射天线(0.8-6.0GHZ for Gain Calibration)到待测天线(AUT)的距离为 3.0 米，待测天线放置在旋转平台上,藉由控制转台旋转的角度可对待测天线做概略性及较为准确的量测。

将待测天线放置于旋转台上,并测得其各个平面(ZY 平面及 ZX 平面)的 360 度场强数据。再将待测天线换置成标准偶极天线将其 360 度的场强数据测出，以作换算增益标准值，经由式 1 的换算即可获得待测天线的增益值及方向图。

3-1 Measuring Method

1. Using a low loss coaxial cable to link a standard handset jig,
2. Fixed this handset jig on chamber's rotator plane,
3. Linking jig into network analyzer port and using a probing horn antenna to collect data,
4. Using another standard gain horn antenna to calibrated those data.

3-2 Efficiency and Gain Value

Frequency (MHz)	Eftficiency (%)	Average GAIN (dB)	Peak GAIN (dBi)
2400	43.5%	-3.61	3.53
2450	42.8%	-3.69	3.17
2500	45.4%	-3.43	2.79
5000	42.6%	-3.71	4.28
5400	43.6%	-3.61	4.01
5800	46%	-3.37	3.96

3-3 3D Pattern

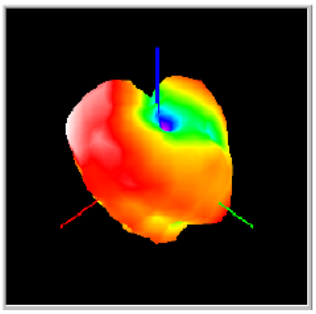

2400MHZ

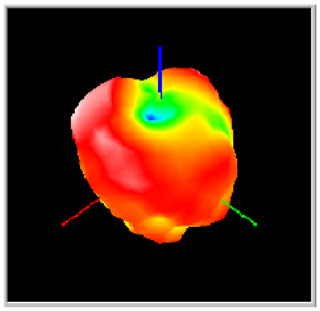

2500MHZ

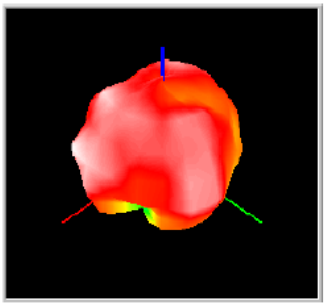

5000MHZ

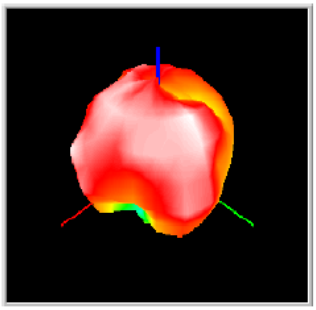

5800MHZ

4. Mechanical Specification:

Mechanical Configuration (Unit: mm)

The appearance of the antenna is according to drawing Figure 4-1

NO.	NAME	SPECIFICATION	Q'TY
1	Cable线	L=80mm O.D.=1.13mm 黑色一代端子 开口朝上	1
2	ANTENNA	W2818L-FBT-A 黑色油墨 亮黑字符	1

版次	变更内容	设计	日期
A0			

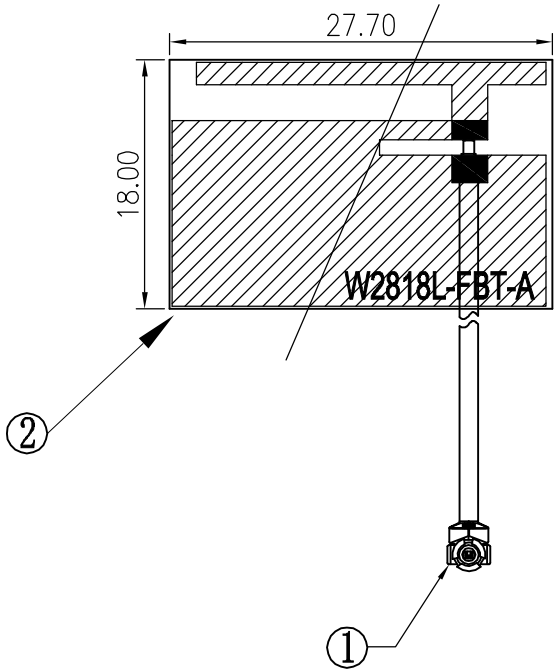

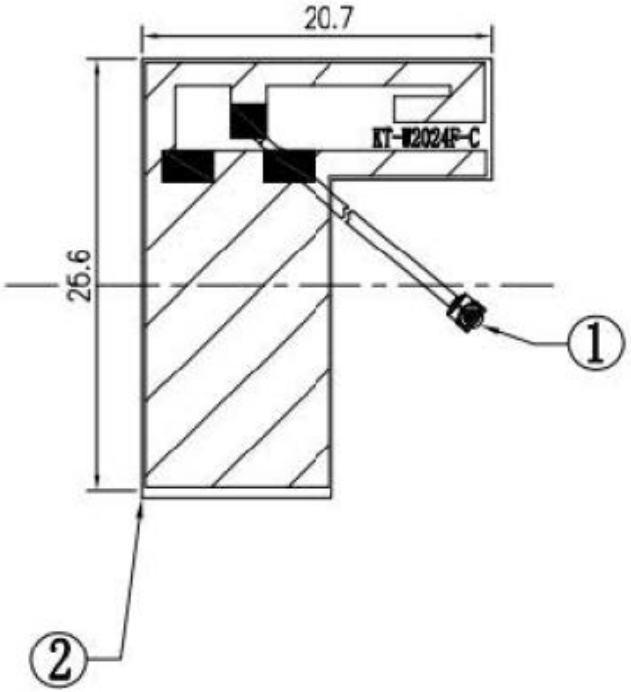

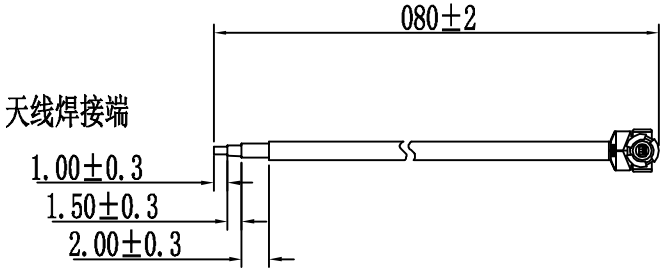

NOTES:

1. Electrical:
   - 1.1 Impedance: 50 OHM.
   - 1.2 Frequency:2400～2500MHz&5000～5800MHz
   - 1.3 Polarization :Vertical
   - 1.4 VSWR: ≤3.0
   - 1.5
2. Enviromental:
   - 2.1 Storage Temperature Range: -30 TO +70℃.
   - 2.2 Operating Temperature Range: -30 TO +70℃.
3. All Materials Must Meet & Shall RoHS Request.

深 圳 市 肯 特 新 工 业 技 术 有 限 公 司

设 计		名 称					
审 核		成品料号	W2818L-F1C1B-080-U				
批 准		比例	版次	单位	视图	变更标记	变更数量
		FREE	A2	mm		A	——