TEST REPORT

Report No.:	BCTC2410139775E
Applicant:	Shenzhen applink technology co.,ltd
Product Name:	wireless alarm sensor
Test Model:	U031F
Tested Date:	2024-10-14 to 2024-10-18
Issued Date:	2024-10-29

Shenzhen BCTC Testing Co., Ltd.

FCC ID:2BCUT-U031F

Product Name:	wireless alarm sensor
Trademark:	qolelarm
Model/Type Reference:	U031F,U031D,U031M,U031Z,U032D,U032M,U032Z,U050D,U050E,U060F,U021D,U040S
Prepared For:	Shenzhen applink technology co.,ltd
Address:	C806,No.1 east,shangxue industry zone,bantian,longgang,shenzhen,china
Manufacturer:	Shenzhen applink technology co.,ltd
Address:	C806,No.1 east,shangxue industry zone,bantian,longgang,shenzhen,china
Prepared By:	Shenzhen BCTC Testing Co., Ltd.
Address:	1-2/F., Building B, Pengzhou Industrial Park, No.158, Fuyuan 1st Road, Zhancheng , Fuhai Subdistrict, Bao'an District, Shenzhen, Guangdong, China
Sample Received Date:	2024-10-14
Sample tested Date:	2024-10-14 to 2024-10-18
Report No.:	BCTC2410139775E
Test Standards:	FCC Part15.231(a) ANSI C63.10-2013
Test Results:	PASS

Tested by:

Brave Zeng

Brave Zeng/ Project Handler

Approved by:

Zero Zhou/Reviewer

The test report is effective only with both signature and specialized stamp. This result(s) shown in this report refer only to the sample(s) tested. Without written approval of Shenzhen BCTC Testing Co., Ltd, this report can't be reproduced except in full. The tested sample(s) and the sample information are provided by the client.

Table Of Content

Test Report Declaration Page
1. Version 4
2. Test Summary 5
3. Measurement Uncertainty 6
4. Product Information and Test Setup 7
4.1 Product Information 7
4.2 Test Setup Configuration 7
4.3 Support Equipment 8
4.4 Channel List 8
4.5 Test Mode 8
5. Test Facility and test Instrument Used 9
5.1 Test Facility 9
5.2 Test Instrument Used 9
6. Conducted Emissions 11
6.1 Block Diagram Of Test Setup 11
6.2 Limit 11
6.3 Test procedure 11
6.4 EUT operating Conditions 11
6.5 Test Result 12
7. Radiated Emissions 13
7.1 Block Diagram Of Test Setup 13
7.2 Limit 14
7.3 Test procedure 17
7.4 EUT operating Conditions 18
7.5 Test Result 19
8. Bandwidth Test 23
8.1 Block Diagram Of Test Setup 23
8.2 Limit 23
8.3 Test procedure 23
8.4 EUT operating Conditions 23
8.5 Test Result 24
9. Calculation of Average Factor 25
10. Transmission Deactivate Time 28
10.1 Block Diagram Of Test Setup 28
10.2 Limit 28
10.3 Test procedure 28
10.4 Test Result 29
11. Antenna Requirement 30
11.1 Standard Requirement 30
11.2 EUT Antenna 30
12. EUT Test Setup Photographs 31

1. Version

Report No.	Issue Date	Description	Approved
BCTC2410139775E	2024-10-29	Original	Valid

2. Test Summary

The Product has been tested according to the following specifications:

No.	Test Parameter	Clause No.	Results
1	Conducted Emission	§15.207	N/A
2	Fundamental &Radiated Spurious Emission Measurement	15.209,15.231b	PASS
3	Occupy Bandwidth	15.231c	PASS
4	Transmission Deactivate Time	15.231a	PASS
5	Antenna Requirement	15.203	PASS
NOTE: N/A (Not Applicable) 1. The EUT is powered by the DC only, the test item is not applicable			

3. Measurement Uncertainty

Where relevant, the following measurement uncertainty levels have been estimated for tests performed on the Product as specified in CISPR 16-4-2. This uncertainty represents an expanded uncertainty expressed at approximately the 95% confidence level using a coverage factor of k=2.

No.	Item	Uncertainty
1	3m chamber Radiated spurious emission(9KHz-30MHz)	U=3.7dB
2	3m chamber Radiated spurious emission(30MHz-1GHz)	U=4.3dB
3	3m chamber Radiated spurious emission(1GHz-18GHz)	U=4.5dB
4	3m chamber Radiated spurious emission(18GHz-40GHz)	U=3.34dB
5	Conducted Emission(150kHz-30MHz)	U=3.2dB
6	Conducted Adjacent channel power	U=1.38dB
7	Conducted output power uncertainty Above 1G	U=1.576dB
8	Conducted output power uncertainty below 1G	U=1.28dB
9	humidity uncertainty	U=5.3%
10	Temperature uncertainty	U=0.59℃

4. Product Information and Test Setup

4.1 Product Information

Model/Type reference:	U031F,U031D,U031M,U031Z,U032D,U032M,U032Z,U050D,U050E,U060F,U021D,U040S
Model differences:	The following models of units we produce are identical in electrical, mechanical and physical structure; The difference is only in the model name, we finally have U031F as test model.
Hardware Version:	N/A
Software Version:	N/A
Modulation:	ASK
Frequency Range:	433.92MHz
Number of Channels:	1 Channel
Antenna:	Internal antenna
Antenna gain:	0 dBi
Remark:	The antenna gain of the product comes from the antenna report provided by the customer, and the test data is affected by the customer information.
Test Voltage:	DC 3V

4.2 Test Setup Configuration

See test photographs attached in *EUT TEST SETUP PHOTOGRAPHS* for the actual connections between Product and support equipment.

Spurious emissions:

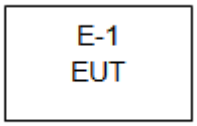

4.3 Support Equipment

No.	Device Type	Brand	Model	Series No.	Note
E-1	wireless alarm sensor	N/A	U031F	N/A	EUT
E-2	N/A	N/A	N/A	N/A	N/A

Notes:
1. All the equipment/cables were placed in the worst-case configuration to maximize the emission during the test.
2. Grounding was established in accordance with the manufacturer's requirements and conditions for the intended use.

4.4 Channel List

CH	Frequency (MHz)
1	433.92

4.5 Test Mode

To investigate the maximum EMI emission characteristics generates from EUT, the test system was pre-scanning tested base on the consideration of following EUT operation mode or test configuration mode which possible have effect on EMI emission level. Each of these EUT operation mode(s) or test configuration mode(s) mentioned above was evaluated respectively.

Final Test Mode	Description
Mode 1	TX Mode

Note:
(1) The measurements are performed at the 1 channel.
(2) Fully battery is used during the test

5. Test Facility and test Instrument Used

5.1 Test Facility

All measurement facilities used to collect the measurement data are located at Shenzhen BCTC Testing Co., Ltd. Address:1-2/F., Building B, Pengzhou Industrial Park, No.158, Fuyuan 1st Road, Zhancheng, Fuhai Subdistrict, Bao'an District, Shenzhen, Guangdong, China. The site and apparatus are constructed in conformance with the requirements of ANSI C63.4 and CISPR 16-1-1 other equivalent standards.
FCC Test Firm Registration Number: 712850
A2LA certificate registration number is: CN1212
ISED Registered No.: 23583
ISED CAB identifier: CN0017

5.2 Test Instrument Used

RF Conducted Test					
Equipment	**Manufacturer**	**Model#**	**Serial#**	**Last Cal.**	**Next Cal.**
Power meter	Keysight	E4419	\	May 16, 2024	May 15, 2025
Power Sensor (AV)	Keysight	E9300A	\	May 16, 2024	May 15, 2025
Signal Analyzer20kHz-26.5GHz	Keysight	N9020A	MY49100060	May 16, 2024	May 15, 2025
Spectrum Analyzer9kHz-40GHz	R&S	FSP40	100363	May 16, 2024	May 15, 2025

Radiated Emissions Test (966 Chamber)					
Equipment	**Manufacturer**	**Model#**	**Serial#**	**Last Cal.**	**Next Cal.**
966 chamber	ChengYu	966 Room	966	May 16, 2024	May 15, 2025
Receiver	R&S	ESR3	102075	May 16, 2024	May 15, 2025
Receiver	R&S	ESRP	101154	May 16, 2024	May 15, 2025
Amplifier	Schwarzbeck	BBV9744	9744-0037	May 16, 2024	May 15, 2025
TRILOG Broadband Antenna	Schwarzbeck	VULB9163	942	May 21, 2024	May 20, 2025
Loop Antenna(9KHz -30MHz)	Schwarzbeck	FMZB1519B	00014	May 21, 2024	May 20, 2025
Amplifier	SKET	LAPA_01G18G-45dB	SK2021040901	May 16, 2024	May 15, 2025
Horn Antenna	Schwarzbeck	BBHA9120D	1541	May 21, 2024	May 20, 2025
Amplifier(18GHz-40GHz)	MITEQ	TTA1840-35-HG	2034381	May 16, 2024	May 15, 2025
Horn Antenn(18GHz-40GHz)	Schwarzbeck	BBHA9170	00822	May 21, 2024	May 20, 2025
Spectrum Analyzer9kHz-40GHz	R&S	FSP40	100363	May 16, 2024	May 15, 2025
Software	Frad	EZ-EMC	FA-03A2 RE	\	\

6. Conducted Emissions

6.1 Block Diagram Of Test Setup

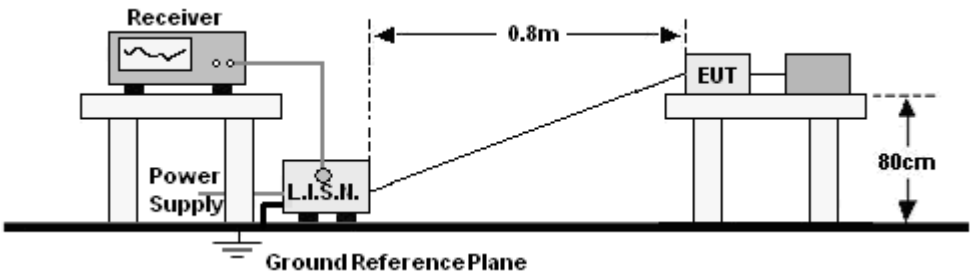

6.2 Limit

Frequency (MHz)	Limit (dBuV)	
	Quas-peak	Average
0.15 -0.5	66 - 56 *	56 - 46 *
0.50 -5.0	56.00	46.00
5.0 -30.0	60.00	50.00

Notes:
1. *Decreasing linearly with logarithm of frequency.
2. The lower limit shall apply at the transition frequencies.

6.3 Test procedure

Receiver Parameters	Setting
Attenuation	10 dB
Start Frequency	0.15 MHz
Stop Frequency	30 MHz
IF Bandwidth	9 kHz

a. The Product was placed on a nonconductive table 0.8 m above the horizontal ground reference plane, and 0.4 m from the vertical ground reference plane, and connected to the main through Line Impedance Stability Network (L.I.S.N).
b. The RBW of the receiver was set at 9 kHz in 150 kHz ~ 30MHz with Peak and AVG detector in Max Hold mode. Run the receiver's pre-scan to record the maximum disturbance generated from Product in all power lines in the full band.
c. For each frequency whose maximum record was higher or close to limit, measure its QP and AVG values and record.

6.4 EUT operating Conditions

The EUT was configured for testing in a typical fashion (as a customer would normally use it). The EUT has been programmed to continuously transmit during test. This operating condition was tested and used to collect the included data.

6.5 Test Result

The EUT is powered by the DC only, the test item is not applicable

7. Radiated Emissions

7.1 Block Diagram Of Test Setup

（A）Radiated Emission Test-Up Frequency Below 30MHz

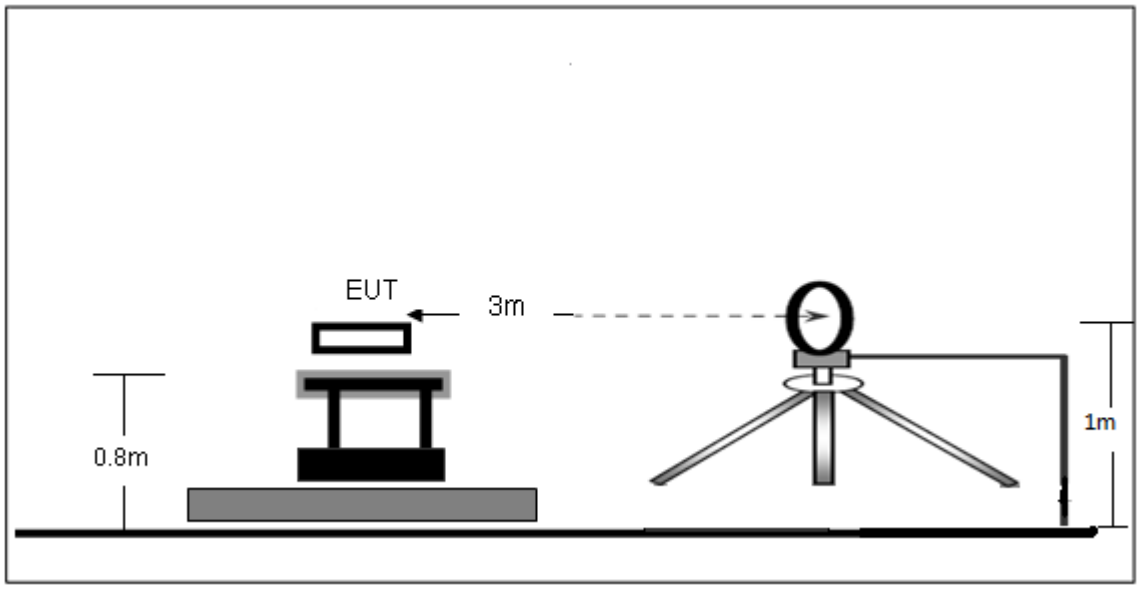

（B）Radiated Emission Test-Up Frequency 30MHz~1GHz

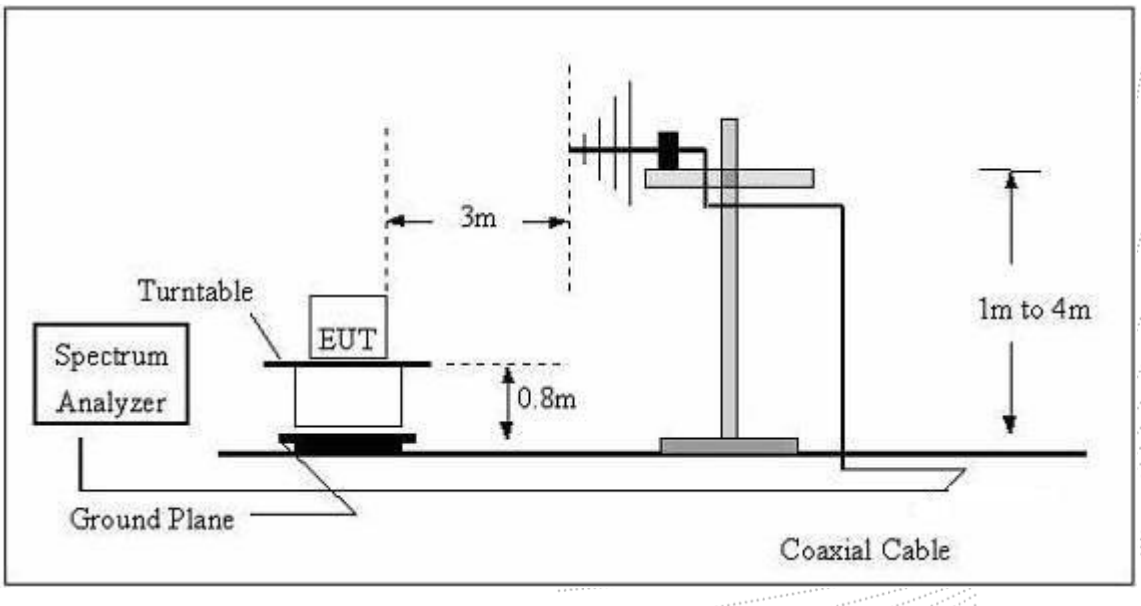

（C）Radiated Emission Test-Up Frequency Above 1GHz

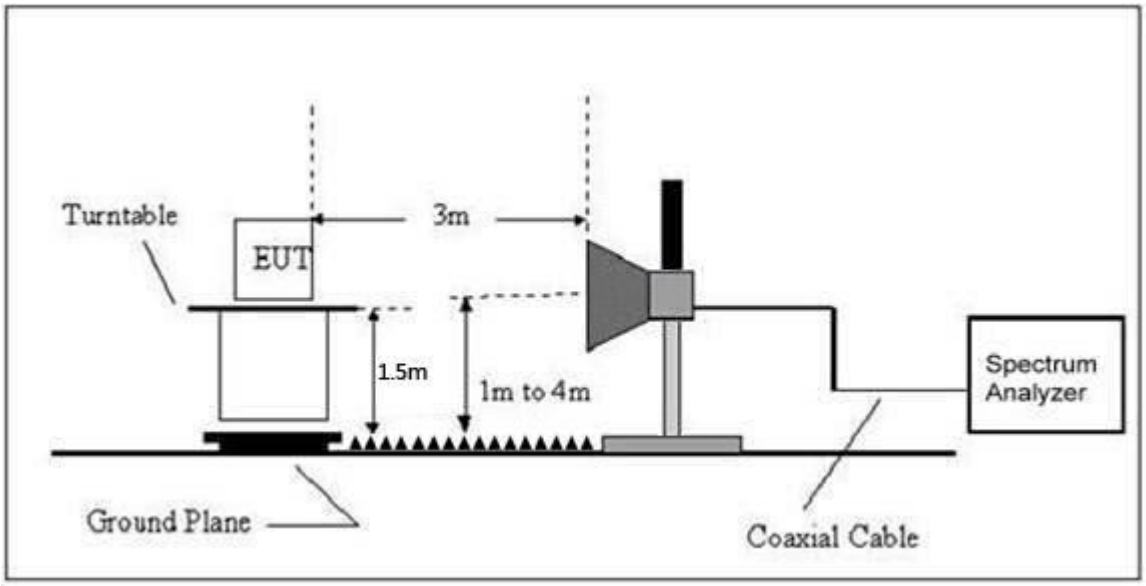

7.2 Limit

Intentional radiators may operate at a periodic rate exceeding that specified in paragraph (a) of this section and may be employed for any type of operation, including operation prohibited in paragraph (a) of this section, provided the intentional radiator complies with the provisions of paragraphs (b) through (d) of this section, except the field strength table in paragraph (b) of this section is replaced by the following:

According to FCC Part 15.231 the field strength limited

Frequencies (MHz)	Field strength of fundamental @3m		Effective limit for 433.92MHz	
	(uV/m)	dB(uV/m)	(uV/m)	dB(uV/m)
40.66-40.70	2250	67		
70-130	1250	62		
130-174	1250 to 3750*	62 to 71.5*		
174-260	3750	71.5		
260-470	**3750 to 12500***	**71.5 to 81.9***	**10996.67**	**80.82**
Above 470	12500	81.9		

* Linear interpolation

Frequencies (MHz)	Field strength of Spurious emissions @3m		Effective limit for 433.92MHz	
	(uV/m)	dB(uV/m)	(uV/m)	dB(uV/m)
40.66-40.70	225	47		
70-130	125	41.9		
130-174	125 to 375*	41.9 to 51.5*		
174-260	375	51.5		
260-470	**375 to 1250***	**51.5 to 61.9***	**1099.67**	**60.82**
Above 470	1250	61.9		

* Linear interpolation

The field intensity in micro-volts per meter can then be determined by the following equation: FI(V/ m) = 10FI (dBV/ m) / 20 The FCC specified emission limits were calculated according the EUT operating frequency and obtained by following linear interpolation equations:

(a) For fundamental frequency:

f_{EUT} : EUT Operating Frequency Emission Limit (V/m)

$$= [fEUT(MHz) - 260(MHz)] \times \frac{12500(V/m) - 3750(V/m)}{470(MHz) - 260(MHz)} + 3750(V/m)$$

(b) For spurious frequencies:

f_{EUT} : EUT Operating Frequency Emission Limit (V/m)

$$= [f_{EUT}(MHz) - 260(MHz)] \times \frac{1250(V/m) - 375(V/m)}{470(MHz) - 260(MHz)} + 375(V/m)$$

Other emissions radiated outside of the specified frequency bands, except for harmonics, shall be attenuated by at least 20 dB below the level of the fundamental or comply with the radiated emissions limits specified in section 1 5.209(a) limit in the table below has to be followed.

Note:

(1) The tighter limit applies at the band edges.

(2) Emission level (dBuV/m)=20log Emission level (uV/m).

FCC Part15 (15.231) , Subpart C		
Fundamental Frequency	Field Strength Of Fundamental	Field Strength of Spurious Emissions
433.92MHz	AV:80.82 dBuV/m at 3m distance	AV:60.82 dBuV/m at 3m distance
	PK:100.82dBuV/m at 3m distance	PK:80.82 dBuV/m at 3m distance

According to FCC Part15.205, Restricted bands

MHz	MHz	MHz	GHz
0.090-0.110	16.42-16.423	399.9-410	4.5-5.15
10.495-0.505	16.69475-16.69525	608-614	5.35-5.46
2.1735-2.1905	16.80425-16.80475	960-1240	7.25-7.75
4.125-4.128	25.5-25.67	1300-1427	8.025-8.5
4.17725-4.17775	37.5-38.25	1435-1626.5	9.0-9.2
4.20725-4.20775	73-74.6	1645.5-1646.5	9.3-9.5
6.215-6.218	74.8-75.2	1660-1710	10.6-12.7
6.26775-6.26825	123-138	2200-2300	14.47-14.5
8.291-8.294	149.9-150.05	2310-2390	15.35-16.2
8.362-8.366	156.52475-156.52525	2483.5-2500	17.7-21.4
8.37625-8.38675	156.7-156.9	2690-2900	22.01-23.12
8.41425-8.41475	162.0125-167.17	3260-3267	23.6-24.0
12.29-12.293	167.72-173.2	3332-3339	31.2-31.8
12.51975-12.52025	240-285	3345.8-3358	36.43-36.5
12.57675-12.57725	322-335.4	3600-4400	(2)
13.36-13.41			

According to FCC Part15.205, the level of any transmitter spurious emission in Restricted bands shall not

exceed the level of the emission specified in the following table

20dBc in any 100 kHz bandwidth outside the operating frequency band. In case the emission fall within the restricted band specified on 15.205(a), then the 15.209(a) limit in the table below has to be followed.

Frequency	Field Strength	Distance	Field Strength Limit at 3m Distance	
(MHz)	uV/m	(m)	uV/m	dBuV/m
0.009 ~ 0.490	2400/F(kHz)	300	10000 * 2400/F(kHz)	$20\log^{(2400/F(kHz))} + 80$
0.490 ~ 1.705	24000/F(kHz)	30	100 * 24000/F(kHz)	$20\log^{(24000/F(kHz))} + 40$
1.705 ~ 30	30	30	100 * 30	$20\log^{(30)} + 40$
30 ~ 88	100	3	100	$20\log^{(100)}$
88 ~ 216	150	3	150	$20\log^{(150)}$
216 ~ 960	200	3	200	$20\log^{(200)}$
Above 960	500	3	500	$20\log^{(500)}$

Limits Of Radiated Emission Measurement (Above 1000MHz)

Frequency (MHz)	Limit (dBuV/m) (at 3M)	
	Peak	Average
Above 1000	74	54

Notes:

(1)The limit for radiated test was performed according to FCC PART 15C.

(2)The tighter limit applies at the band edges.

(3) Emission level (dBuV/m)=20log Emission level (uV/m).

Frequency Range Of Radiated Measurement

(a) For an intentional radiator the spectrum shall be investigated from the lowest radio frequency signal generated in the device, without going below 9 kHz, up to at least the frequency shown in this paragraph:

(1) If the intentional radiator operates below 10 GHz: to the tenth harmonic of the highest fundamental frequency or to 40 GHz, whichever is lower.

(2) If the intentional radiator operates at or above 10 GHz and below 30 GHz: to the fifth harmonic of the highest fundamental frequency or to 100 GHz, whichever is lower.

(3) If the intentional radiator operates at or above 30 GHz: to the fifth harmonic of the highest fundamental frequency or to 200 GHz, whichever is lower, unless specified otherwise elsewhere in the rules.

(4) If the intentional radiator operates at or above 95 GHz: To the third harmonic of the highest fundamental frequency or to 750 GHz, whichever is lower, unless specified otherwise elsewhere in the rules.

(5) If the intentional radiator contains a digital device, regardless of whether this digital device controls the functions of the intentional radiator or the digital device is used for additional control or function purposes other than to enable the operation of the intentional radiator, the frequency range shall be investigated up to the range specified in paragraphs (a) (1)through (4) of this section or the range applicable to the digital device, as shown in paragraph (b)(1) of this section, whichever is the higher frequency range of

investigation.

7.3 Test procedure

Receiver Parameter	Setting
Attenuation	Auto
9kHz~150kHz	RBW 200Hz for QP
150kHz~30MHz	RBW 9kHz for QP
30MHz~1000MHz	RBW 120kHz for QP

Spectrum Parameter	Setting
1-6GHz	RBW 1 MHz /VBW 1 MHz for Peak, RBW 1 MHz / VBW 10Hz for Average

Below 1GHz test procedure as below:

a. The EUT was placed on the top of a rotating table 0.8 meters above the ground at a 3 meter semi-anechoic camber. The table was rotated 360 degrees to determine the position of the highest radiation.

b. The EUT was set 3 meters away from the interference-receiving antenna, which was mounted on the top of a variable-height antenna tower.

c. The antenna height is varied from one meter to four meters above the ground to determine the maximum value of the field strength. Both horizontal and vertical polarizations of the antenna are set to make the measurement.

d. For each suspected emission, the EUT was arranged to its worst case and then the antenna was tuned to heights from 1 meter to 4 meters (for the test frequency of below 30MHz, the antenna was tuned to heights 1 meter) and the rotatable table was turned from 0 degrees to 360 degrees to find the maximum reading.

e. The test-receiver system was set to Peak Detect Function and Specified Bandwidth with Maximum Hold Mode.

f. If the emission level of the EUT in peak mode was 10dB lower than the limit specified, then testing could be stopped and the peak values of the EUT would be reported. Otherwise the emissions that did not have 10dB margin would be re-tested one by one using peak, quasi-peak or average method as specified and then reported in a data sheet.

Above 1GHz test procedure as below:

a. The EUT was placed on the top of a rotating table 1.5 meters above the ground at a 3 meter camber. The table was rotated 360 degrees to determine the position of the highest radiation.

b. The EUT was set 3 meters away from the interference-receiving antenna, which was mounted on the top of a variable-height antenna tower.

c. The antenna height is varied from one meter to four meters above the ground to determine the maximum value of the field strength. Both horizontal and vertical polarizations of the antenna are set to make the measurement.

d. For each suspected emission, the EUT was arranged to its worst case and then the antenna was tuned to heights from 1 meter to 4 meters and the rota table was turned from 0 degrees to 360 degrees to find the maximum reading.

e. The test-receiver system was set to Peak Detect Function and Specified Bandwidth with Maximum Hold Mode.

f. If the emission level of the EUT in peak mode was 10dB lower than the limit specified, then testing could be stopped and the peak values of the EUT would be reported. Otherwise the emissions that did not have 10dB margin would be re-tested one by one using peak, quasi-peak or average method as specified and then reported in a data sheet.

g. Test the EUT has only one channel.

Note:
Both horizontal and vertical antenna polarities were tested and performed pretest to three orthogonal axis. The worst case emissions were reported.

7.4 EUT operating Conditions

The EUT was configured for testing in a typical fashion (as a customer would normally use it). The EUT has been programmed to continuously transmit during test. This operating condition was tested and used to collect the included data.

7.5 Test Result

Below 30MHz

Temperature:	26℃	Relative Humidity:	24%
Pressure:	101 kPa	Test Voltage:	DC 3V
Test Mode:	Mode 1	Polarization:	--

Freq.	Reading	Limit	Margin	State
(MHz)	(dBuV/m)	(dBuV/m)	(dB)	P/F
--	--	--	--	PASS
--	--	--	--	PASS

Note:

The amplitude of spurious emissions which are attenuated by more than 20dB below the permissible value has no need to be reported.

Distance extrapolation factor =40 log (specific distance/test distance)(dB);

Limit line = specific limits(dBuv) + distance extrapolation factor.

Between 30MHz – 1GHz

Temperature:	26 ℃	Relative Humidity:	54%
Pressure:	101KPa	Phase :	Horizontal
Test Mode:	Mode 1	Test Voltage ：	DC 3V

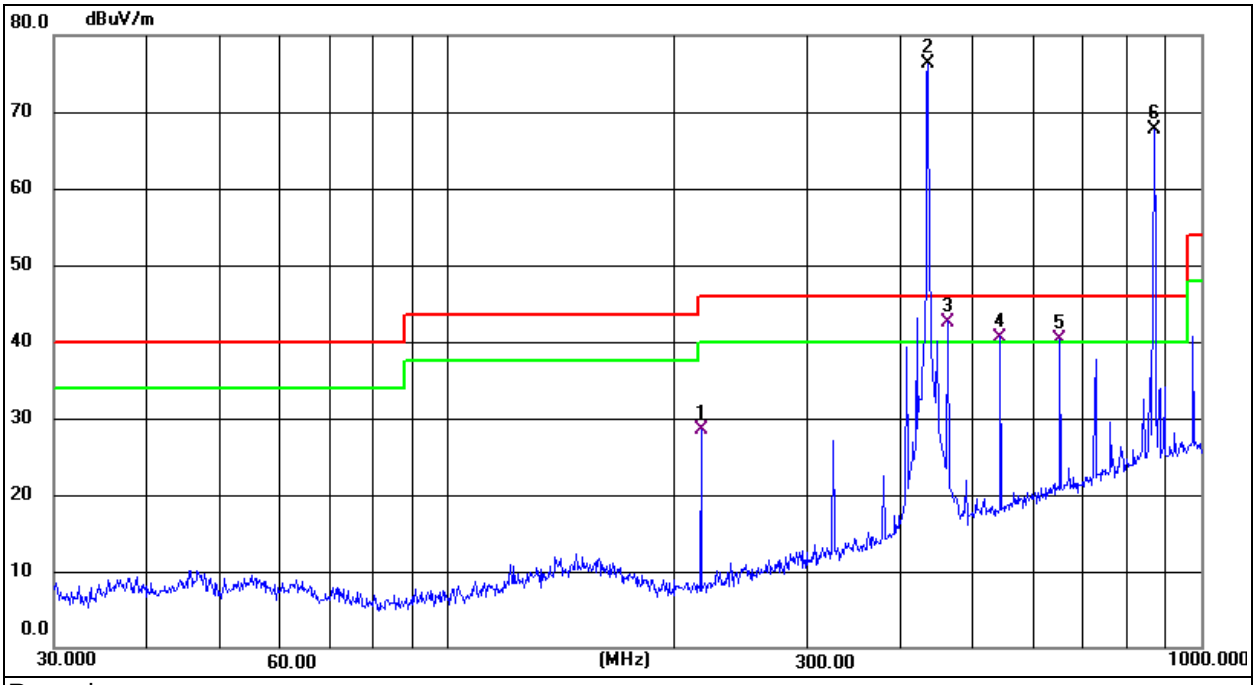

Remark:
1. Factor = Antenna Factor + Cable Loss – Pre-amplifier.
2. Measurement = Reading Level + Correct Factor
3. Over = Measurement - Limit

No.	Frequency (MHz)	Reading (dBuV)	Factor (dB/m)	Level (dBuV/m)	Limit (dBuV/m)	Margin (dB)	Detector
1	216.9729	45.43	-16.91	28.52	46.00	-17.48	QP
2 *	434.0649	85.61	-9.40	76.21	100.82	-24.61	peak
3 !	461.1311	51.23	-8.63	42.60	46.00	-3.40	QP
4 !	542.5601	47.10	-6.50	40.60	46.00	-5.40	QP
5 !	651.0850	44.01	-3.75	40.26	46.00	-5.74	QP
6 X	867.9880	67.25	0.44	67.69	80.82	-13.13	peak

Temperature:	26 ℃	Relative Humidity:	54%
Pressure:	101KPa	Phase :	Vertical
Test Mode:	Mode 1	Test Voltage ：	DC 3V

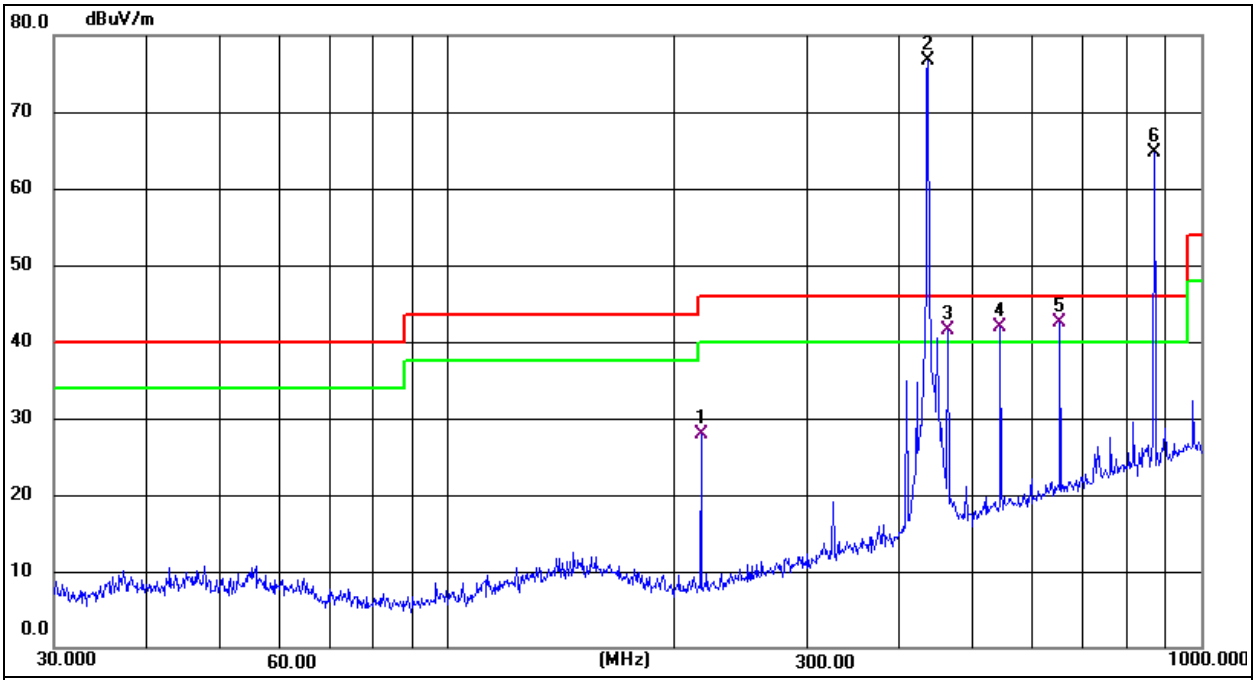

Remark:
1. Factor = Antenna Factor + Cable Loss – Pre-amplifier.
2. Measurement = Reading Level + Correct Factor
3. Over = Measurement - Limit

No.	Frequency (MHz)	Reading (dBuV)	Factor (dB/m)	Level (dBuV/m)	Limit (dBuV/m)	Margin (dB)	Detector
1	216.9729	44.89	-16.91	27.98	46.00	-18.02	QP
2 *	434.0649	86.04	-9.40	76.64	100.82	-24.18	peak
3 !	461.1311	50.15	-8.63	41.52	46.00	-4.48	QP
4 !	542.5601	48.32	-6.50	41.82	46.00	-4.18	QP
5 !	651.0850	46.32	-3.75	42.57	46.00	-3.43	QP
6 X	867.9880	64.18	0.44	64.62	80.82	-16.2	peak

For average Emission

Frequency MHz	Peak Level dBuV/m	Duty cycle factor	Average Level dBuV/m	Limit AV	Margin	Polarization
433.92	80.29	-8.12	72.17	80.82	-8.65	Horizontal
868.59	61.28	-8.12	53.16	60.82	-7.66	Horizontal

Notes:
1. Average emission Level = Peak Level + Duty cycle factor
2.Duty cycle level please see clause 9.

Frequency MHz	Peak Level dBuV/m	Duty cycle factor	Average Level dBuV/m	Limit AV	Margin	Polarization
433.92	74.67	-8.12	66.55	80.82	-14.27	Vertical
868.06	59.24	-8.12	51.12	60.82	-9.7	Vertical

Notes:
1. Average emission Level = Peak Level + Duty cycle factor
2. Duty cycle level please see clause 9.

Radiated Spurious Emission (1GHz to 10th harmonics)

Frequency MHz	Peak Level dBuV/m	Duty cycle factor	Average Level dBuV/m	Limit		Margin dB		Polarization
				PK	AV	PK	AV	
1301.76	55.27	-8.12	47.15	74	54	-26.85	-6.85	Vertical
1735.68	57.33	-8.12	49.21	74	54	-24.79	-4.79	Vertical
2603.52	57.47	-8.12	49.35	74	54	-24.65	-4.65	Vertical
3037.44	55.59	-8.12	47.47	74	54	-26.53	-6.53	Vertical
3471.36	59.36	-8.12	51.24	74	54	-22.76	-2.76	Vertical
3905.28	57.41	-8.12	49.29	74	54	-24.71	-4.71	Vertical
1301.76	56.34	-8.12	48.22	74	54	-25.78	-5.78	Horizontal
1735.68	51.58	-8.12	43.46	74	54	-30.54	-10.54	Horizontal
2603.52	50.52	-8.12	42.4	74	54	-31.6	-11.6	Horizontal
3037.44	60.45	-8.12	52.33	74	54	-21.67	-1.67	Horizontal
3471.36	55.68	-8.12	47.56	74	54	-26.44	-6.44	Horizontal
3905.28	56.4	-8.12	48.28	74	54	-25.72	-5.72	Horizontal

Notes:
1.Average emission Level = Peak Level + Duty cycle factor
2.Duty cycle level please see clause 9.
3. Pulse Desensitization Correction Factor
Pulse Width (PW) =47.55 ms
RBW =1 MHz
PW (47.55 ms)> 1/RBW (1us)
Therefore PDCF is not needed
4.Other harmonics emissions are lower than 20dB below the allowable limit.

8. Bandwidth Test

8.1 Block Diagram Of Test Setup

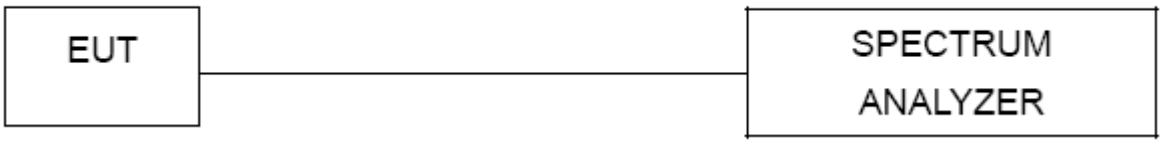

8.2 Limit

According to FCC 15.231(c) requirement:

The bandwidth of the emission shall be no wider than 0.25% of the center frequency for devices operating between 70 MHz to 900 MHz. Those devices operating above 900 MHz, the emission spurious shall be no wider than 0.5% of the center frequency. Bandwidth is determined at the points 20 dB down from the modulated carrier.

B.W (20dBc) Limit = 0.25% * f(MHz) = 0.25% * 433.92MHz = 1.0848MHz

Spectrum Parameter	Setting
Attenuation	Auto
Span Frequency	> Measurement Bandwidth or Channel Separation
RB	1 % to 5 % of the OBW
VB	≥RBW
Detector	Peak
Trace	Max Hold
Sweep Time	Auto

8.3 Test procedure

a. The EUT was directly connected to the spectrum analyzer and antenna output port as show in the block diagram below,
b. Spectrum Setting : RBW= 1 % to 5 % of the OBW, VBW≥ RBW, Sweep time = Auto.

8.4 EUT operating Conditions

The EUT tested system was configured as the statements of 2.4 Unless otherwise a special operating condition is specified in the follows during the testing.

8.5 Test Result

Temperature:	26 ℃	Relative Humidity:	54%
Pressure:	101kPa	Test Voltage:	DC 3V
Test Mode:	Mode 1		

Frequency	20dB Bandwidth(kHz)	Limit(KHz)	Result
433.92MHz	6.13	≤1084.8	PASS

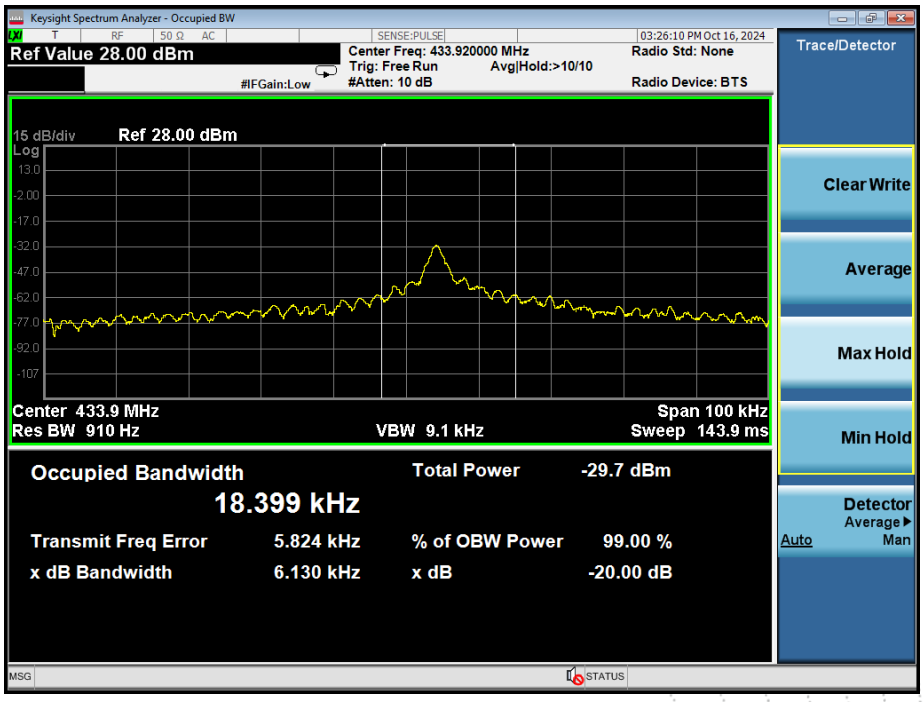

9. Calculation of Average Factor

The output field strOengths of specification in accordance with the FCC rules specify measurements with an average detector. During the test, a spectrum analyzer incorporating a peak detector was used. Therefore, a reduction factor can be applied to the resultant peak signal level and compared to the limit for measurement instrumentation incorporating an average detector.

The duty cycle is measured in 100 ms or the repetition cycle period, whichever is a shorter time frame. The duty cycle is measured by placing the spectrum analyzer to set zero span at 100kHz resolution bandwidth.

Averaging factor in dB =20log (duty cycle)
The duration of one cycle =47.55ms
The duty cycle is simply the on-time divided the duration of one cycle
Duty Cycle = (1.08ms*14+0.325ms*11)/ 47.55ms
=18.695ms / 47.55ms
=0.3932
Therefore, the averaging factor is found by 20log0.3932=-8.12dB
Test plot as follows:
Note: During the 47.55ms, the amount of pulse and on-time of pulse are the same for every pulse train.

Cycle

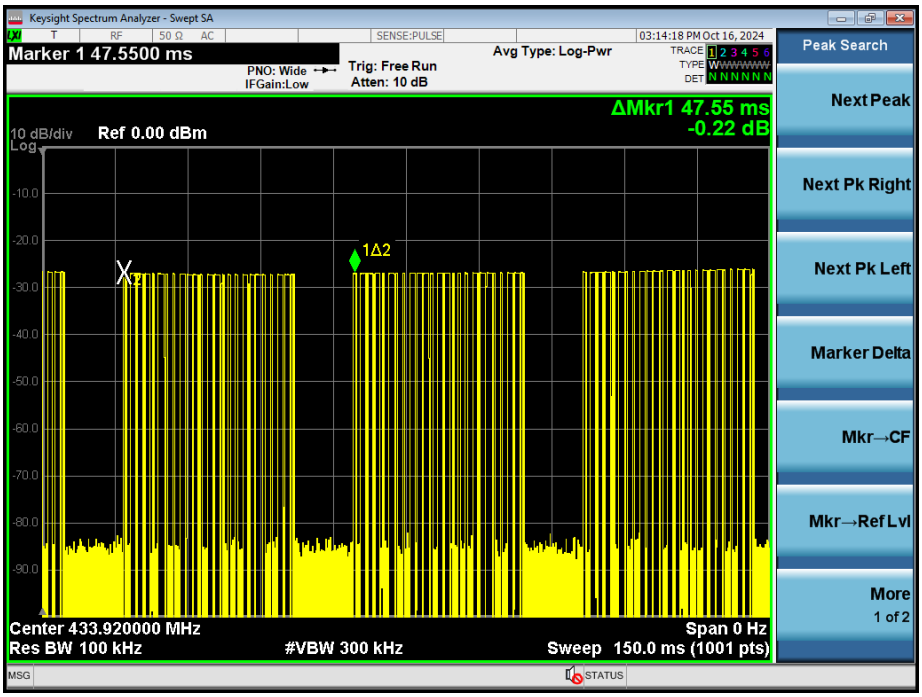
Keysight Spectrum Analyzer - Swept SA
Marker 1 47.5500 ms
PNO: Wide
IFGain:Low
Trig: Free Run
Atten: 10 dB
Avg Type: Log-Pwr
03:14:18 PM Oct 16, 2024
ΔMkr1 47.55 ms
-0.22 dB
10 dB/div
Ref 0.00 dBm
1Δ2
Center 433.920000 MHz
Res BW 100 kHz
#VBW 300 kHz
Span 0 Hz
Sweep 150.0 ms (1001 pts)
Peak Search
Next Peak
Next Pk Right
Next Pk Left
Marker Delta
Mkr→CF
Mkr→Ref Lvl
More
1 of 2

Pulse

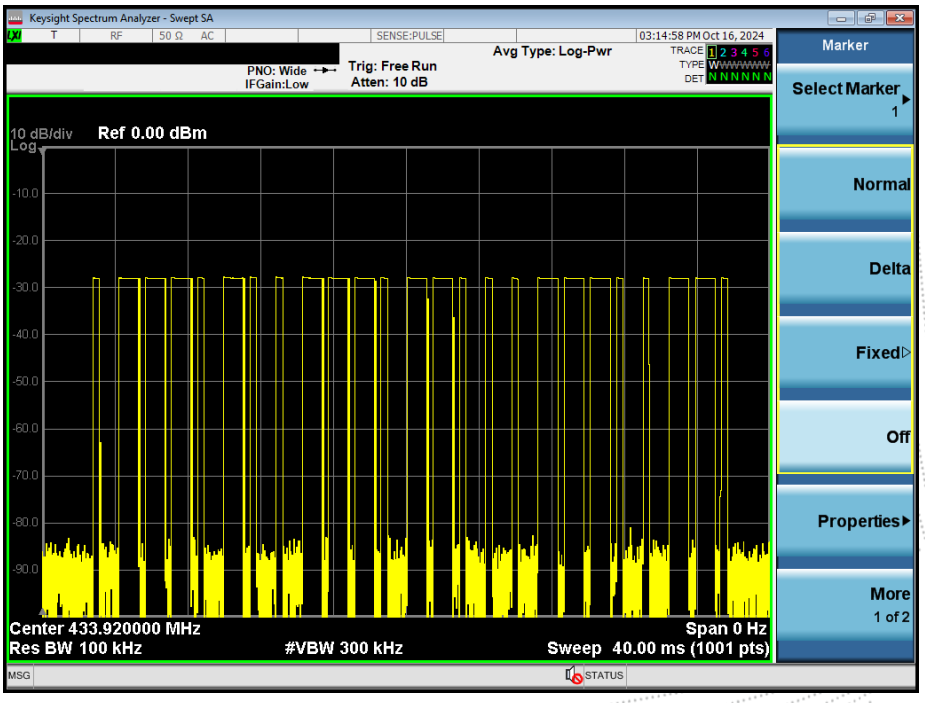
Keysight Spectrum Analyzer - Swept SA
PNO: Wide
IFGain:Low
Trig: Free Run
Atten: 10 dB
Avg Type: Log-Pwr
03:14:58 PM Oct 16, 2024
10 dB/div
Ref 0.00 dBm
Center 433.920000 MHz
Res BW 100 kHz
#VBW 300 kHz
Span 0 Hz
Sweep 40.00 ms (1001 pts)
Marker
Select Marker
1
Normal
Delta
Fixed
Off
Properties
More
1 of 2

On-time

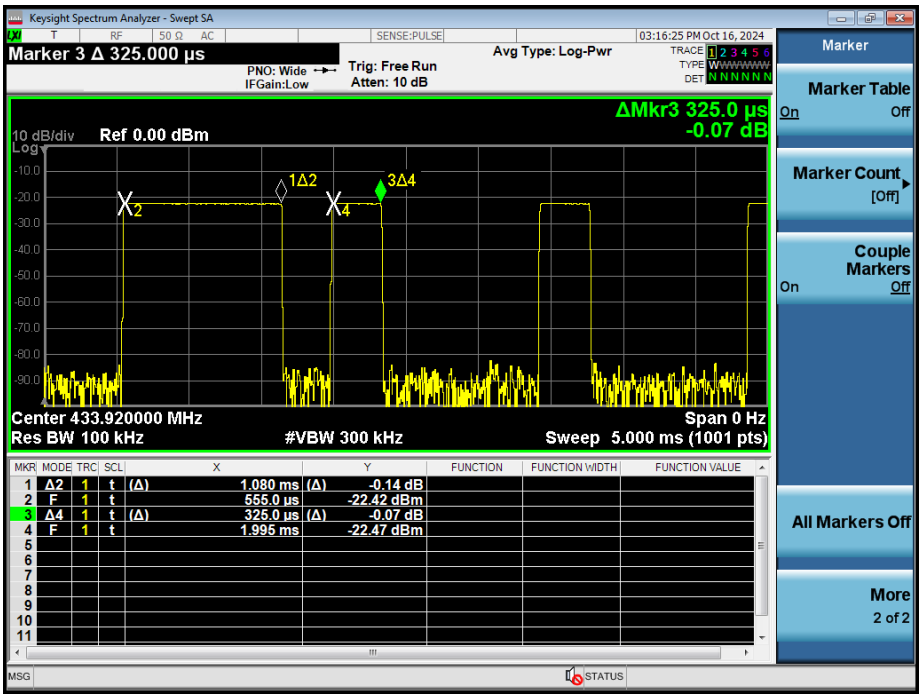
Keysight Spectrum Analyzer - Swept SA
Marker 3 Δ 325.000 µs
PNO: Wide
IFGain:Low
Trig: Free Run
Atten: 10 dB
Avg Type: Log-Pwr
03:16:25 PM Oct 16, 2024
ΔMkr3 325.0 µs
-0.07 dB
10 dB/div
Ref 0.00 dBm
Center 433.920000 MHz
Res BW 100 kHz
#VBW 300 kHz
Span 0 Hz
Sweep 5.000 ms (1001 pts)
MKR MODE TRC SCL X Y FUNCTION FUNCTION WIDTH FUNCTION VALUE
1 Δ2 1 t (Δ) 1.080 ms (Δ) -0.14 dB
2 F 1 t 555.0 µs -22.42 dBm
3 Δ4 1 t (Δ) 325.0 µs (Δ) -0.07 dB
4 F 1 t 1.995 ms -22.47 dBm
Marker
Marker Table
Marker Count
Couple Markers
All Markers Off
More
2 of 2

10. Transmission Deactivate Time

10.1 Block Diagram Of Test Setup

10.2 Limit

According to FCC 15.231(a) requirement:
A manually operated transmitter shall employ a switch that will automatically deactivate the transmitter within not more than 5 seconds of being released.

10.3 Test procedure

a) Check the calibration of the measuring instrument using either an internal calibrator or a known signal from an external generator.
b) Position the EUT without connection to measurement instrument. Turn on the EUT and connect its antenna terminal to measurement instrument via a low loss cable. Then set it to any one measured frequency within its operating range, and make sure the instrument is operated in its linear range.
c) Set RBW to 100 kHz and VBW of spectrum analyzer to 300 kHz with a convenient frequency span including 100 kHz bandwidth from band edge.
d) Measure the highest amplitude appearing on spectral display and set it as a reference level. Plot the graph with marking the highest point and edge frequency.
e) Repeat above procedures until all measured frequencies were complete.

10.4 Test Result

Transmission Deactivate Time	Limit (second)	Result
390ms	<5s	Pass

Test plot as follows:

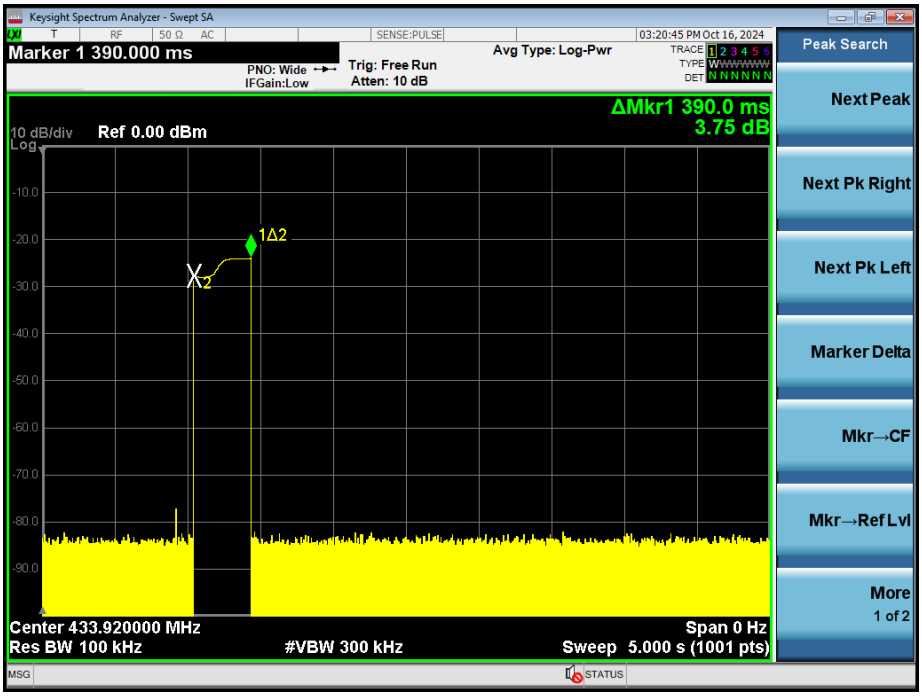

11. Antenna Requirement

11.1 Standard Requirement

15.203 requirement: For intentional device, according to 15.203: an intentional radiator shall be designed to ensure that no antenna other than that furnished by the responsible party shall be used with the device.

11.2 EUT Antenna

The EUT antenna is the Internal antenna It complies with the standard requirement.

12. EUT Test Setup Photographs

Spurious Emission Test Setup (Below 1GHz)

Spurious Emission Test Setup (Above 1GHz)

STATEMENT

1. The equipment lists are traceable to the national reference standards.

2. The test report can not be partially copied unless prior written approval is issued from our lab.

3. The test report is invalid without the "special seal for inspection and testing".

4. The test report is invalid without the signature of the approver.

5. The test process and test result is only related to the Unit Under Test.

6. Sample information is provided by the client and the laboratory is not responsible for its authenticity.

7. The quality system of our laboratory is in accordance with ISO/IEC17025.

8. If there is any objection to this test report, the client should inform issuing laboratory within 15 days from the date of receiving test report.

Address:
1-2/F., Building B, Pengzhou Industrial Park, No.158, Fuyuan 1st Road, Zhancheng, Fuhai Subdistrict, Bao'an District, Shenzhen, Guangdong, China

TEL：400-788-9558

P.C.: 518103

FAX：0755-33229357

Website: http://www.chnbctc.com

Consultation E-mail: bctc@bctc-lab.com.cn

Complaint/Advice E-mail: advice@bctc-lab.com.cn

※※※※※ END ※※※※※