Car player
Operating Manual

[To Customer]

Dear Customer:

Thanks for buy our car MP5 player, it is our honor and pleasure to server you to using our product. Before using this product, please read this manual very carefully and keep it properly. As production date and batch difference, the instruction maybe have hope you will like this product and then we can build long term business relationship in near future. Your kindly feedback and support will prompt us to do the better. Thank you.

[Instructions For Use]

For the sake of your safety, please don't watch the video while driving and operating a machine; Please dispatch the volume to clearly while driving to the voice to the outside world. Before operation, please read this manual and other manual system, understand the use of manual and machine related safety tips and warning signs, after reading in a readily accessible place for ready reference.

1. Pay attention to traffic safety in the first place.
2. If you meet difficulty in operating the system, please again after he parked his car in a safe place.

3. Don’t let children operate this machine, lest cause personal injury and damage to the machine.
4. Please follow the traffic rules when using satellite navigation function to drive.
5. Please do not ban the use of electronic equipment or it is forbidden to use open flame such as gas stations, brewery, strong electromagnetic interference region, otherwise may cause danger.
6. Don’t maintenance, maintenance, installation of the machine itself. Under the condition of the plug do not install or repair the machine, by not trained in electronic equipment or vehicles accessories installation personnel or the lack of experience installation and maintenance of this machine is very dangerous.
7. Do not install the machine storage or in direct sunlight place, don’t put it in other harmful material environment, especially the LCD screen, if the installation of the LCD screen is in the air conditioner near the air duct, please keep cool and hot air blows directly to the machine, otherwise it may damage the machine, even on the bus or personal injury.
8. Please do not use some sharp objects painted screen, don’t use hard objects to press the screen, otherwise will cause damage to display or touch screen.
9. In order to guarantee the normal operation of the machine, and prevent the occurrence of fire or get an electric shock, please don’t expose machine in damp air, more can’t liquid drying machine.

Tips and warnings:

In order to emphasize the important information of user manual, ⚠see this tag should pay special attention to, it said some important warning and prompt information.

Safety note

Please read all instructions before installation and suggested by car audio professional installation of the machine.

⚠ The machine is suitable for car 12V power supply system (must have grounding line), please do not install the machine in 24V car, otherwise it will damage the machine.

⚠ In no professional guidance, not to replace the power fuse, use only a fuse of the improper, can cause the damage of the machine and cause a fire.

🚫 In order to avoid the violation of traffic rules, the driver shall not watching while driving and operating the machine, lest produce unnecessary accidents.

🚫 For safety and ensure that the product normal use, please to the professional of this product installation, disassembly or repair the machine by yourself, lest cause the machine damage and accidents, for details please contact with the local professional car audio store.

Please prevent this product in a humid environment and the water, in order to avoid short circuit caused by electric shock, or other unnecessary damage and fire happened.

Note: In order to prevent it short out, before the installation, please remember that the car stall and breaking the ACC connected to B+.

Machine Reset

1. The first use of the system before or after the replacement battery, the machine must be reset.
2. When the machine function is not normal, the machine must be reset.
3. Click restore factory settings in system settings interface, make the machine is in the initial state.
4. Use a pointed object, press the RESET button on the panel, or click the system RESET in the system settings, the machine will be RESET to turn it off, back to the factory the initial state.

Note: press the RESET button and the system initialization will lose time and set the value before.

INSTALLATION

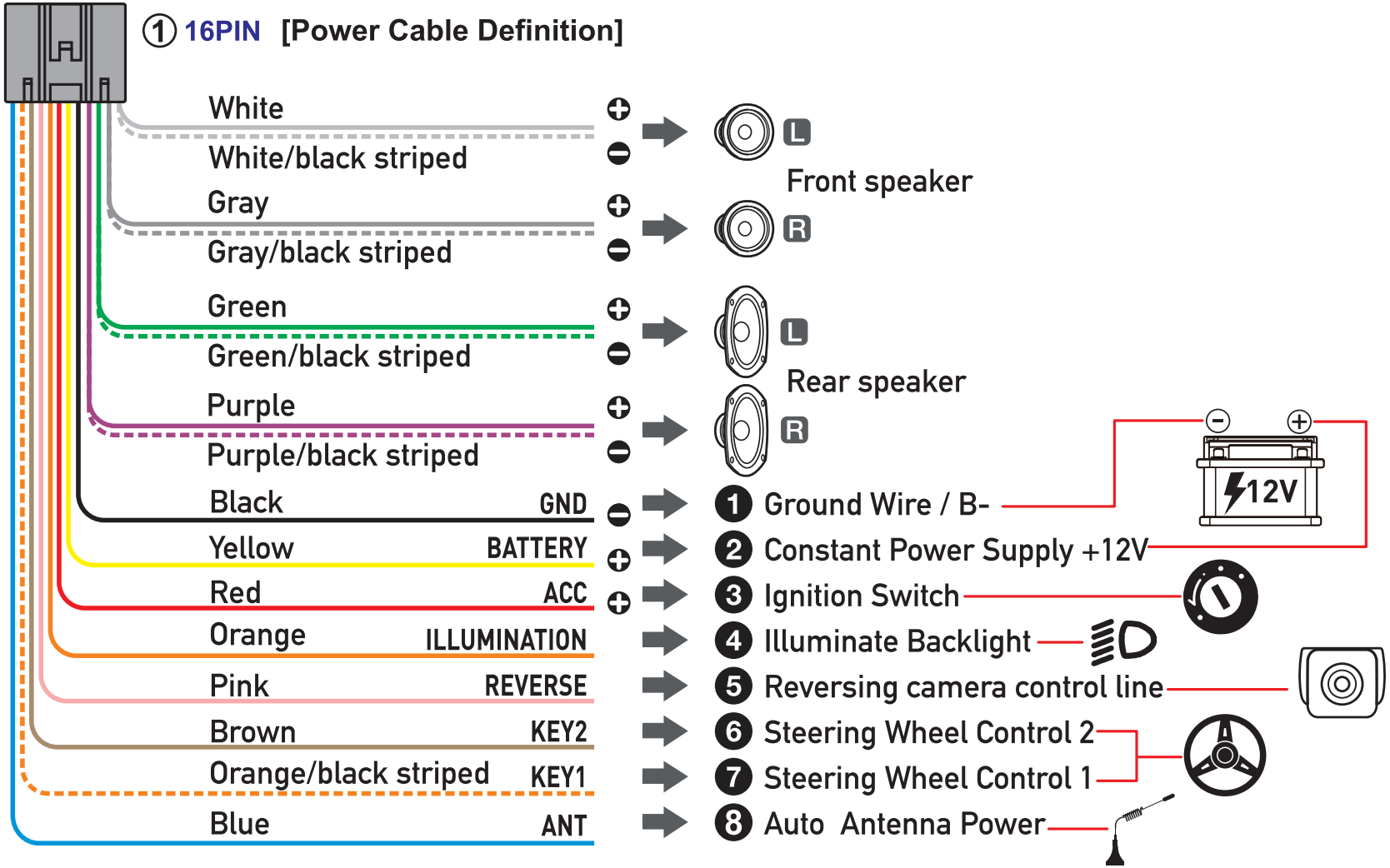

[RCA Cable Definition]

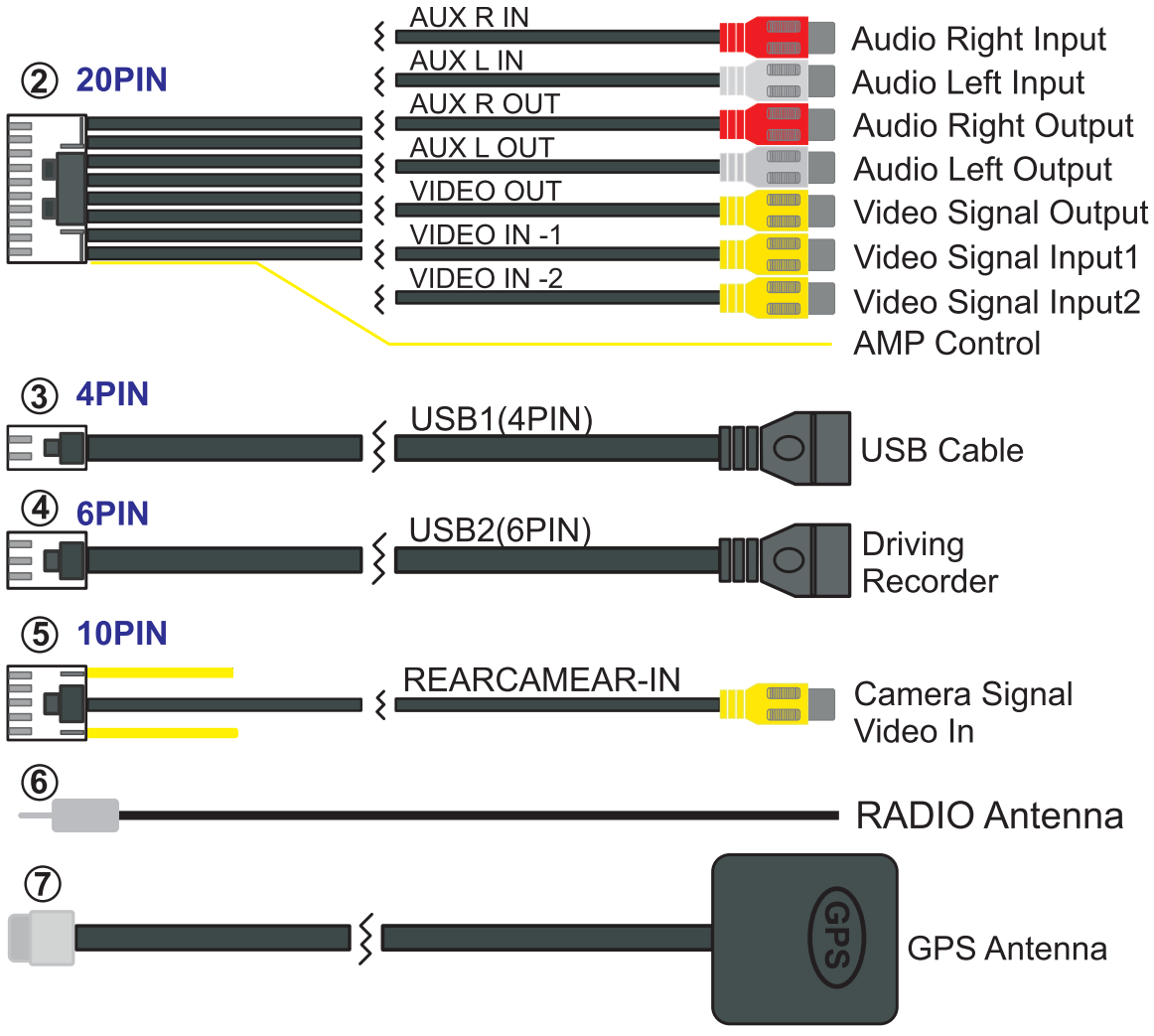

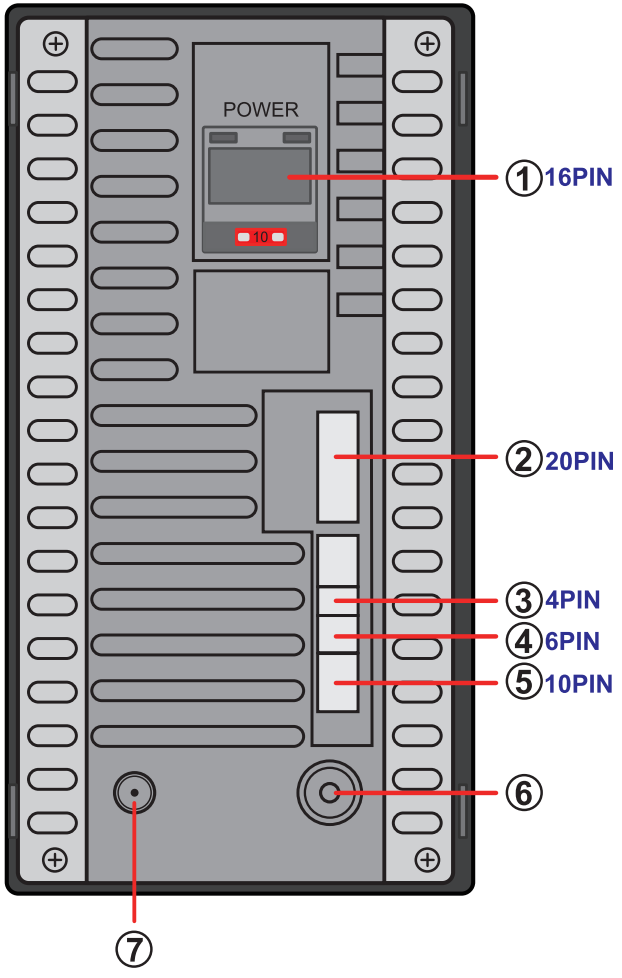

INSTALLATION STEPS

Picture 1

Picture 2

Picture 3

1. How to find the power cord of the car ?

First turn the car key to the ACC state. Then regulate the Universal Watch to the 20V gear. Connect the black stylus to the power ground (the outer ironclad of the cigar lighter) and use the red stylus to test each wire of the car. Normally a car has two wires about 12V(some cars only have one). That is the positive pole line. How to distinguish the ACC and memory line? Pull out the car key after you find the two positive pole lines. The memory line is the electrically charged one after you unplug the key.

2. How to find the ground wire of the car (negative pole)?

Turn the Universal Watch to the on/off beep gear. Then connect the black stylus to the power ground (the outer ironclad of the cigar lighter) and use the red stylus to test each wire except the two power lines. The energized one is the ground wire(negative pole). Some cars have two ground wires.

3. How to find the horn line of the car?

Turn the Universal Watch to the on/off beep gear. Connect the black stylus to any wire except the power cord and ground wire. Then use the red stylus to test each remaining wire. The energized one is the horn wire. Then use the same method to find out the other horn lines.

4. How to test whether the unit work properly?

When you get the unit, you'd better test the unit with battery or power supply before installation. Wire connection method: Twist the red wire and yellow wire together and then connect them to the positive pole. Connect the black wire to the negative pole. Then press the switch to turn on the unit and get a horn to connect to the horn wire. (Two wires connected to the horn are of the same color. The white wire is supposed to be connected to the positive pole and the white one with black part connected to the negative pole of the horn. You can make no distinction between the positive and negative poles of the horn.) Then test the function of the unit.

5. How to connect Bluetooth?

Turn on the unit and initiate Bluetooth function of phone, and then search for the user name of the unit. Click the connect button and the phone will show it is connected. If you want to play music with Bluetooth, press the function transition button to switch to Bluetooth mode and then click songs on your phone. You can also dial numbers on your phone to make a phone call with Bluetooth.

6. How to fix the unit ?

Since each car has a different way of fixing the unit and the location of the screws are different, there is no defined way to fix the unit. You may consult the fixing method of the original unit. If it was fixed by tightening screws with the steel angle, you can unload the steel angle of the original unit to both sides of our unit, then use the electrician tape to tight the steel angle (since screw hole size is probably unmatched). If the original unit was fixed with iron frame, you can fix the iron frame of our unit in the car first, and then push the unit to fasten it. If the size is not fit, you can wrap the unit with electrician tape to increase the volume of the unit, and then put it in and fasten it. Or you can think of a better way to fix it, but anyway, you can fix it.

7. How to install the navigation antenna ?

First you should tighten the screws of the navigation antenna and the unit. Then you must fix the navigation antenna module in a place that has sunlight or on the windshield. (That’s very important because poor installation will affect navigation signals.)

SCHEMATIC DIAGRAM OF REVERSING CAMERA WIRING

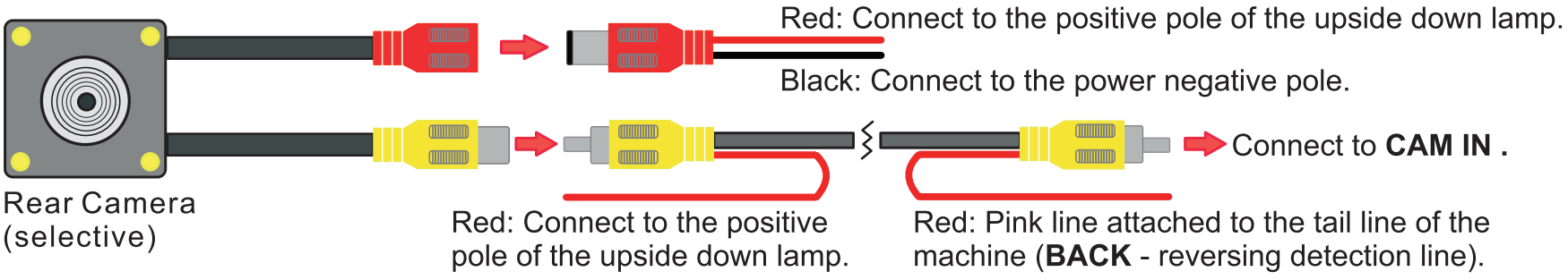

FIXED MACHINE

1. Fix the bracket on the left and right sides of the machine with screws, and adjust the position of the bracket according to the actual installation.
2. Screw the machine in the mounting position of the central console of the car.

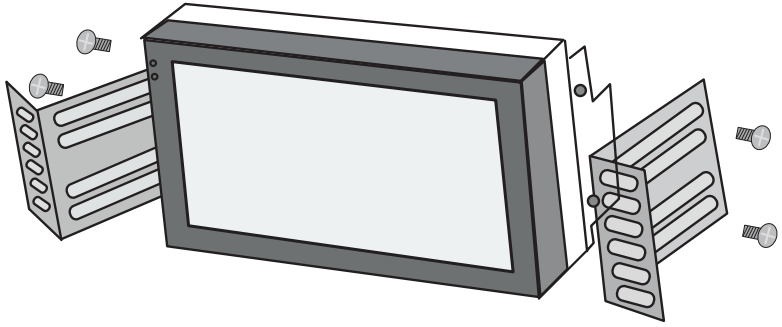

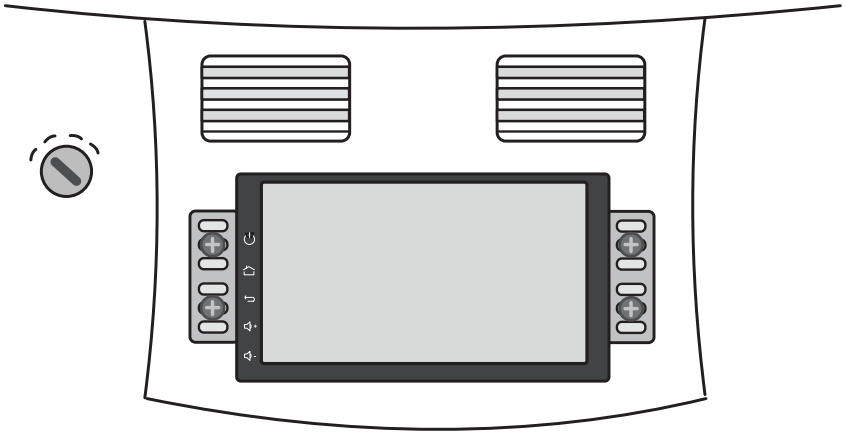

SIMPLE TROUBLESHOOTING

PROBLEMS, CAUSE & SOLUTIONS

1> Unable to boot normally

– Reason for not booting

1. “Yellow” “Red” “Black” this 3 lines only connected 2 line of them, so it will not start, it should be that the yellow line is connected to the positive pole, red line to the key control line, black to the negative pole, less connection or wrong connection does not boot.

2. The original car line and unit wiring can not be connected to the color, the color of the original car line is not standard, if you connect like that it can not only be turned on but also may burn.
3. The original car plug can’t be plugged directly into the new unit, even if it just plugs in, it can’t be used, otherwise it won’t be turned on or burned.
4. The 3 wires are connected right, but it does not boot. Check if the fuse on the yellow line is broken. If there is no problem with the fuse, twist the yellow and red wires together. Turn on the key and press the unit’s power button to see if it can be turned on.
5. Every time you change the fuse, it burns. Please don’t change it again The reason is that when you first connect the positive and negative poles, the protection circuit of the unit is short-circuited. The unit can be repaired under the guidance of our master. No basis can only be returned to the after-sales or new unit. If these are no problem, or also don’t boot, please make the final step to confirm, find a 12V battery or 12V power supply “yellow” and “red” twist together with the positive, black to the negative pole, press the button check if it can boot or no, if you can boot, it showed that the original car line is not right connect, or there is a problem with the car line. If it can’t be boot, the unit is broken. Does not boot unit, check the line carefully, do not blindly suspect the unit problem.

2> Automatic shut-down

– Automatic shutdown usually has these following conditions

1. The cable error connect: If the blue cable (automatic antenna power supply) is connected to the power cable of the unit, an automatic shutdown will occur. Please follow the correct wiring method to solve the problem.
2. The voltage is unstable: please find a 12V-5A which one is the power supply and re-tested to see if it will automatically shut down or no. If it does not automatically shut down after the test, please replace the power supply. If it will automatically shut down, it is problem with the unit.

3> Having noise

– The general situation of noise is caused by two reasons

1. The original speaker power is too small. When the volume of the unit is turned up, there will be noise.

Solution: When replacing the speaker or listening to the song, the volume should not be too large.

2. The speaker cable is grounded.

Solution: Take the iron speaker cable. Directly connected to the speaker cable of the unit.

4> Remote control cannot be used

– Check if the battery of the remote control has power

1. Test method: Turn on the camera of the mobile phone and align the light of the remote control, then press the button of the remote control to see if the phone will light up. If it is not lit, there will be no power. Replace the battery; That is, there is electricity, which proves that there is no problem with the remote control.

5> Settings cannot be saved (no memory)

– There is no memory function, there is only 2 points in memory

1. The yellow line and the red line are connected together (separate yellow to positive, red to key control)
2. Yellow and red are reversed (just change position)

6> Car audio with Bluetooth but it can't work

– Check the phone to see if you can search for the unit code or no.

Operation steps: turn on the unit, use the phone Bluetooth search, search for CAR BT, then click the connection, after connecting, you can answer the phone or Bluetooth to play the song.

PIN Code: 0000 .

7> The product smoke has proved that the internal circuit has been burned and change the insurance FUSE can not solve the problem.

– In this case, the unit needs to be repaired.

8> How to adjust the sound, where is the equalizer set, the sound can not be adjusted

– Adjust the sound: please turn the volume to adjust.

– Equalizer settings: In general, press the volume knob to display the equalizer SEL, and rotate the volume button to adjust each sound effect.

– The sound cannot be adjusted:

1.Please reset the unit or unplug the power cord and plug it in.

2.The Volume knob is broken, and the knob can be replaced.

9> Reversing image is not displayed

– Generally two situations

1. Connect the wrong line or less wiring. Camera connection method:

a>The first step is to find accessories (accessory: one camera + one power cord + one video cable).

b>The second step is to find the port of the wiring. First find the reversing control line on the power line of the unit. The control line is a pink line or brown line, connect this line to the positive pole of 12V and the screen will turn blue. Find the back of the unit the CAME video input interface, find the positive and negative of the backup light. The third step is to connect: there are two sockets on the camera, the red socket is connected to the power cable, the yellow is inserted into the video cable, the red wire of the power cable and the wire of the video cable are screwed .

together on the positive pole of the reverse lamp, and the black wire of the power cable is not used, connected, the other end of the video cable is connected to the CAME video input interface on the back of the unit. The red line coming out of the video line is connected to the reversing control line of the power line.

2. The camera is broken. If the lamp that is properly wired to the camera is not lit, it will be broken and replaced with a new one.

10>USB flash disk can not be played?

– USB flash disk can not play:
Format the USB flash disk, and the file system is selected as: FAT32, re-download songs and try again. If it still doesn't work, please replace the USB flash drive.
and into the computer to view it. If there is no content, you need to download it again.

11> FM does not receive the program

– Can not receive the station check the 2 points.

1. The antenna plug is not fully inserted, the antenna is disconnect or the line is disconnect.
2. Search channel, hold AMS does not let go for 2 seconds The unit will automatically search or press the up and down button to perform a channel search. Can't solve the above 2 points, Please unplug the antenna plug and find a screwdriver or a metal strip to insert it instead of the antenna.

12> How to install

This depends on your personal hands-on skill. Most people can install it them selves.

That is so good. No worry about it, I will tell you how to do it. [Installation method]: Remove the original car radio, the new unit can be installed back according to the installation method of the original car radio (that is, how the original car unit is installed, you will install it back, you will do).

13> How to remove the original car's radio

The best way is to do it yourself. If it doesn't, you can ask the installer to help you.

14> Install it without reading the card or USB flash disk

– Before the unit is shipped, it is tested that the USB flash disk and the card are not read. Do not easily suspect the unit. First format the card or USB flash on the computer

and download again, then try again. If not, please change your card or USB flash disk to try it. If you still can't, please unplug the unit and plug it in again. If you don't read it, it may be a unit problem, return to the new or after-sales.

15> Just installed no sound

– Dear customers, the unit has been tested before shipment. If there is no sound, it is usually a wiring error or the original car speaker wire is short-circuited with iron. Please do not doubt the unit. According to the steps to check it.

1. Check if the speaker cable is short-circuited and connected. Please reconnect if you have any short circuit.

2. Check how many speaker cables according to the original speaker cable if there are only two speaker cables to prove that the original car line does not match our unit, you need to re-route the original car line. One speaker must lead to two speaker wires. two speakers must be have four speaker cables to available.

16> After a while there is no sound

– Disconnect all the speaker cable from the unit (do not remove all of them), and then find an external speaker to receive the gray and purple of the tail line of the unit. Green any group, and then try to see if there is any sound. If there is a sound, it is proved that the car's speaker line is short-circuited with iron or the speaker is damaged. If there is no sound, the unit is broken.

[INTRODUCTION TO BASIC FUNCTIONS]

MIC	For voice operation, press under Bluetooth operation.
RST	Press with a pointed object (such as ball point) to reset the unit to its initial setting by the factory (default stage).
⏻	When the unit is turned off, press to turn on the nuit. When the unit is turned on, long press for 3 seconds to turn turn off the unit, and short press repeatedly to mute and relieve mute.
⌂	Press to the **MAIN MENU**.
↩	Press to return to the previous interface.
🔊 **+**	Press repeatedly or press & hold to increase sound output level.
🔊 **-**	Press repeatedly or press & hold to reduce sound output level.

[REMOTE CONTROL] (only supported by some model)

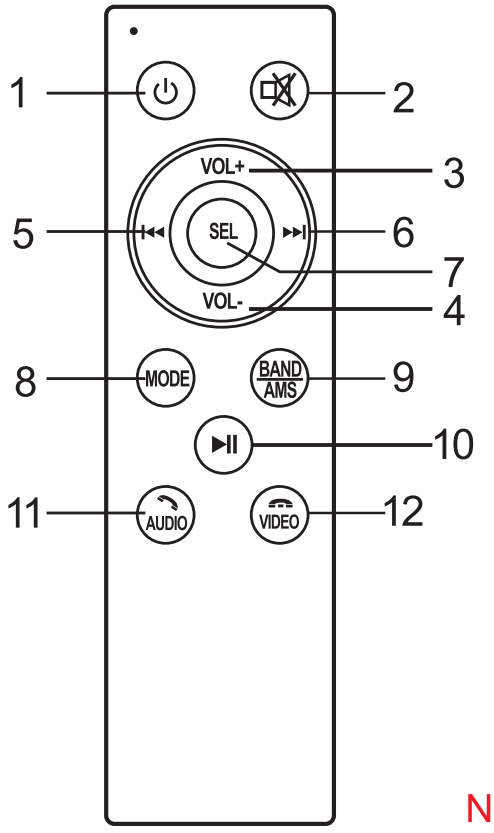

1. Power On/off
2. Mute On/off
3. Volume +
4. Volume -
5. Previous Track
6. Next Track
7. Sel / Enter;
8. Mode: Switch for Radio - BT - Aux In - USB - SD
9. Band/AMS: Band Switching, Automatic Search And Storage Of Radio Stations.
10. Play / Pause
11. Answer Call; Go To Music Player
12. End Call; Go To Video Playback

Note: Only some model have a remote control.

Thank you again for using our products. If you have and other questions, please contact our customer service staff. The product UI interface or function may be modified and upgraded from time to time without prior notice. If there are some differences in the manual, it is normal.

SPECIFICATION

VIDEO SECTION

Video System:	NTSC
Video Output Level:	1.0 Vp-p 75 Ohms
Horizontal Resolution:	500

BLUETOOTH SECTION

Communication type:	V4.0
Maximum Distance:	5 meters

SPECIFICATION

GENERAL

Power Requirement:	DC 12 Volts, negative ground
Load Impedance:	4 Ohms
Maximum Power Output:	60 Watts x 4 (RMS)
Tone Control - Bass (at 100 Hz)	+/- 8 dB
Tone Control - Treble (at 10 KHz)	+/- 8 dB

FM RADIO SECTION

Frequency Range:	87.5 - 108 MHZ
Usable Sensitivity (-20 dB):	15 dB
Signal to Noise Ratio:	60 dB
Stereo Separation (at 1KHz):	30 dB
Frequency Response:	30 Hz - 15 KHz

AUDIO SECTION

Maximum Output Level:	2 Vrms (+/-3 dB)
Frequency Response:	20 Hz - 20 KHz
Signal to Noise Ratio:	85 dB
Channel Separation:	80 dB

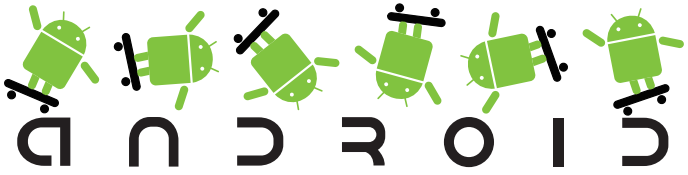

CAR ANDROID PLAYER

This device complies with part 15 of the FCC Rules. Operation is subject to the following two conditions: (1) This device may not cause harmful interference, and (2) this device must accept any interference received, including interference that may cause undesired operation.

Any Changes or modifications not expressly approved by the party responsible for compliance could void the user's authority to operate the equipment.

Note: This equipment has been tested and found to comply with the limits for a Class B digital device, pursuant to part 15 of the FCC Rules. These limits are designed to provide reasonable protection against harmful interference in a residential installation. This equipment generates uses and can radiate radio frequency energy and, if not installed and used in accordance with the instructions, may cause harmful interference to radio communications. However, there is no guarantee that interference will not occur in a particular installation. If this equipment does cause harmful interference to radio or television reception, which can be determined by turning the equipment off and on, the user is encouraged to try to correct the interference by one or more of the following measures:

-Reorient or relocate the receiving antenna.

-Increase the separation between the equipment and receiver.

-Connect the equipment into an outlet on a circuit different from that to which the receiver is connected.

-Consult the dealer or an experienced radio/TV technician for help.

FCC Radiation Exposure statement

The device has been evaluatec to meel general RF exposure requirement. The device can be used in portable exposure condition without restriction.