SUPERISYS

RF-H Series Reader Technical Manual

Table of contents

1. INTRODUCTION 3

1.1 AGREEMENT 3

1.2 PURPOSE OF THIS DOCUMENT 3

1.3 VALID SCOPE OF THE DOCUMENT 3

1.4 DECLARATION OF CONFORMITY 3

1.5 REVISION HISTORY 4

2. SAFETY INSTRUCTIONS 5

2.1 DESCRIPTION OF SAFETY SYMBOLS 5

2.2 GENERAL SAFETY INSTRUCTIONS 5

2.3 SPECIAL SAFETY INSTRUCTIONS 6

3. PRODUCT OVERVIEW 7

4. TECHNICAL PARAMETERS 8

4.1 LIST OF GENERAL TECHNICAL PARAMETERS 8

4.2 RF-HY18R 9

4.2.1 Specifications of RF-HY18R-R4 9

4.2.2 Definition of RF-HY18R-R4 LED 10

4.2.3 RF-HY18R-R4 Installation Dimensions 11

4. 3 RF-HY18RRA 13

4.3.1 Specifications of RF- HY18RRA 13

4.3.2 Definition of RF-HY18RRA LED 13

4.3.3 RF-HY18RRA installation dimensions 15

4. 4 RF-HY30R 16

4.4.1 Specifications of RF-HY30R 16

4.4.2 Definition of RF-HY30R LED 16

4.4.3 RF-HY30R Installation Dimensions 17

4. 5 RF-HZ50L 19

4.5.1 Specifications of RF-HZ50L 19

4.5.2 Definition of RF-HZ50L LED 19

4. 5.3 RF-HZ50L Installation Dimensions 21

4. 6 RF-HZ80L 22

4.6.1 Specifications of RF-HZ80L 22

4.6.2 Definition of RF-HZ80L LED 22

4.6.3 RF-HZ80L Installation Dimensions 24

4. 7RF-HZ100L 25

4.7.1 Specifications of RF-HZ100L *25*
4.7.2 Definition of RF-HZ100L LED *26*
4.7.3 RF-HZ100L Installation Dimensions *27*
4.8 RF-HZ40L 29
4.8.1 Specifications of RF-HZ40L *29*
4.8.2 Definition of RF-HZ40L LED *29*
4.8.3 RF-HZ40L Installation Dimensions *31*
5. PRODUCT INSTALLATION 32
5.1 PRECAUTIONS FOR INSTALLATION 32
5.1.1 Precautions for installing the reading head *32*
5.1.2 Precautions for data carrier installation *34*
5.1.3 Other considerations *35*
5. 2 HARDWARE INTERFACE DESCRIPTION 38
6. PRODUCT OPERATION 38
6.1 REGISTER DEFINITION 38
6.1.1 Tag memory area *39*
6.1.2 System memory area *41*
6.2 MODBUS PROTOCOL SUPPORT 45
6.2.1 MODBUS RTU device configuration *45*
6.2.2 MODBUS TCP device configuration *48*
6.2.3 Commands supported by the device *49*
6 .3 PRODUCT RESET 59
6.4 ERROR CODE 60
7. APPENDIX 62
7.1 COMMUNICATION CABLE DESCRIPTION 62
7.2 DATA CARRIER SELECTION MANUAL 64
7.3 READING RANGE TABLE 66

1. Introduction

1.1 Agreement

The following terms/abbreviations are used synonymously in this document:

Reader , equivalent to " read /write device ", " read/ write device ", " read head ",

Electronic tags, equivalent to " code carrier " and " responder ";

This device, equivalent to " this product " , refers to the product model or series described in this manual .

1.2 Purpose of this document

This manual contains all the information required to use the device correctly, including information on necessary functions, performance, usage, etc. It is suitable both for programmers and test/debugging personnel who debug the system themselves and interface it with other units (automation systems, other programming devices), as well as for service and maintenance personnel who install extensions or perform fault/error analysis.

Please read this manual carefully before installing this equipment and putting it into operation. This manual contains instructions and notes to help you step-by-step through installation and commissioning. This ensures trouble-free use of the product. By familiarizing yourself with this manual , you will gain the following benefits :

- ✓ Ensuring safe operation of equipment
- ✓ Helps you take advantage of the full capabilities of your device
- ✓ Avoid errors and related failures
- ✓ Reduce maintenance and avoid cost waste

1.3 Valid scope of the document

The description in this document is applicable to all high-frequency reader products of the same communication mode of the company.

1.4 Declaration of Conformity

This product has been developed and manufactured in compliance with applicable European standards and guidelines . You can obtain these certificates of conformity from the manufacturer or your local sales representative .

1.5 Revision History

Table 1.1 Document version information

Version	revision date	Modification reason
V1.0	2017.10.20	first edition

2. Safety Instructions

2.1 Description of Safety Symbols

Read these instructions carefully and inspect the equipment before attempting to install, operate, repair, or maintain it. The following special messages may appear throughout this document or on the equipment to indicate status information or to warn of potential hazards.

We divide the safety prompt information into four levels : " Danger " , " Warning " , " Caution " , and " Tip " .

DANGER	Indicates a severely hazardous situation which, if not avoided, will result in death or serious injury
WARNING	Indicates a hazardous situation which, if not avoided, could result in death or serious injury
CAUTION	Indicates a hazardous situation which, if not avoided, could result in minor or moderate injury
NOTICE	Used to prompt information not related to personal injury

This is a DANGER or WARNING symbol that indicates an electrical hazard exists which, if instructions are not followed, will result in personal injury.

This is the " CAUTION " symbol. Used to warn you of a potential personal injury hazard. Observe all safety instructions following this symbol to avoid injury or death.

This is the " NOTICE " symbol , which is used to warn the user of possible risks . Failure to observe this regulation may result in faulty or even complete failure of the device .

2.2 General Safety Instructions

This equipment should only be installed, operated, serviced and maintained by qualified personnel. Qualified person is a person who has skills and knowledge concerning the construction and operation of electrical equipment, and its installation, and has received safety training to recognize and avoid the hazards involved.

User modifications and/or repairs are dangerous and will void the warranty and release the manufacturer from any liability.

Product maintenance can only be carried out by our personnel.

Unauthorized opening and improper servicing of the product can result in extensive equipment damage or possibly personal injury to the user.

In the event of a serious malfunction, discontinue use of the equipment. Prevent accidental operation of the device. If repairs are required, please return the device to your local representative or sales office.

It is the operating company's responsibility to comply with locally applicable safety regulations.

Store unused equipment in its original packaging. This provides the best protection against impact and moisture for the device. Please ensure that the ambient conditions comply with this relevant regulation.

2.3 Special Safety Instructions

Processes started in an uncontrolled manner may endanger other equipment or be subjected to other hazardous equipment , therefore , before commissioning, please ensure that the use of this equipment does not involve risks that may endanger other equipment or be protected from other equipment . RISK OF EQUIPMENT HAZARDS .

power supply

According to the European safety standard EN 60950, this device can only be operated with a current source of limited power, that is, the power supply must have overvoltage and overcurrent protection . In order to prevent the power failure of this equipment , affecting the safety of other equipment ; or the failure of external

equipment, affecting the safety of this equipment.

3. Product Overview

High-frequency integrated industrial-grade RFID read/write head with a working frequency of 13.56MHz and supports ISO 15693 and ISO 14443A protocols. The communication method adopts RS 232, RS 485 or TCP/IP protocol , adopts standard MODBUS protocol, and the software integration is simple. For the communication methods supported by each reading head, see Chapter 4. This series of readers has the following salient features:

- ✓ Designed for the industrial environment, it is applied to the induction recognition system of the automation line.
- ✓ Compact structure, suitable for usage scenarios with limited installation conditions.
- ✓ IP 67 high protection level , anti-interference design , suitable for demanding RFID application environment.

4. technical parameters

4.1 List of general technical parameters

general technical specifications of the RF-H series read/write heads are shown in the table below :

RF parameters	wireless protocol	ISO 15693 , ISO 14443A
	working frequency	13.56MHz
	output power	27.5dBm
	wireless speed	26.48K bit/s
Application Environment	Operating temperature	-25 ℃ ~ +70 ℃
	storage temperature	-25 ℃ ~ +85 ℃
	humidity	5% ~ 95%RH (no condensation)
	Waterproof and dustproof grade	IP67, EN60529
	Anti-vibration	2 mm (f= 5…29.5 Hz) , EN 60068-2-6 7 gn (f= 29.5…150 Hz), EN 60068-2-6
	RF Field Conducted Immunity Test CS	3V, over Class A (including main frequency) 10V, over Class A (except main frequency)
	Electrostatic Discharge Immunity ESD	Contact discharge, 8 KV, over Class A Air discharge, 15 KV, passed Class A IEC 61000-4-2
Certification and Declaration	CE	ETSI EN 301 489-3 , ETSI EN 300 330-1 ETSI EN 301 489-1 , ETSI EN 300 330-2
	RoHS Directive	2011/65/EU , 2015/863/EU

4.2 RF-HY18R

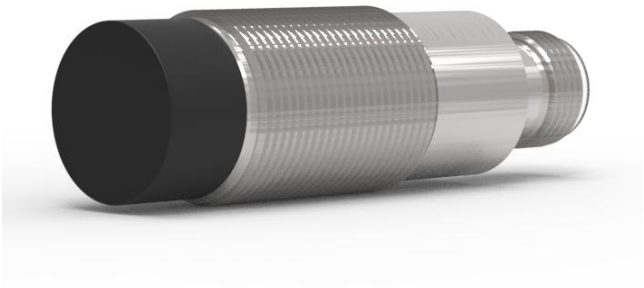

4.2.1 Specifications of RF-HY18R-R4

The technical specifications of RF-HY18R-R4 are as follows :

Specifications	Product number	RF-HY18R-R4
	Reading distance	0~30mm (related to the data carrier)
	Communication Interface	RS485
	communication rate	9600 ~ 115200bit/s
	voltage	9~30VDC
	average current	< 0.05A@24VDC
	indicator light	1 LED indicator
physical parameters	Dimensions	M18×60mm
	fixed type	Nut fixed , thread M18 * 1.0
	Shell material	Stainless steel+ABS
	Shell color	silver+black
	Total Weight	30g _ _
RF parameters	wireless protocol	ISO 15693 , ISO 14443A
	working frequency	13.56MHz
	output power	27.5dBm
	wireless speed	26.48K bit/s
Application	Operating	-25 ℃ ~ +70 ℃

Environment	temperature	
	storage temperature	-25 ℃ ~ +85 ℃
	humidity	5% ~ 95%RH (no condensation)
	Waterproof and dustproof grade	IP67, EN60529
	Anti-vibration	2 mm (f= 5…29.5 Hz) , EN 60068-2-6 7 gn (f= 29.5…150 Hz), EN 60068-2-6
	RF Field Conducted Immunity Test CS	3V, over Class A (including main frequency) 10V, over Class A (except main frequency)
	Electrostatic Discharge Immunity ESD	Contact discharge, 8 KV, over Class A Air discharge, 15 KV, passed Class A IEC 61000-4-2
Certification and Declaration	CE	ETSI EN 301 489-3 , ETSI EN 300 330-1 ETSI EN 301 489-1 , ETSI EN 300 330-2
	RoHS Directive	2011/65/EU , 2015/863/EU

4.2.2 Definition of RF-HY18R-R4 LED

RF-HY18R-R4 reader has 1 LED light to indicate the current working status. The distribution of the LEDs is shown in the figure below.

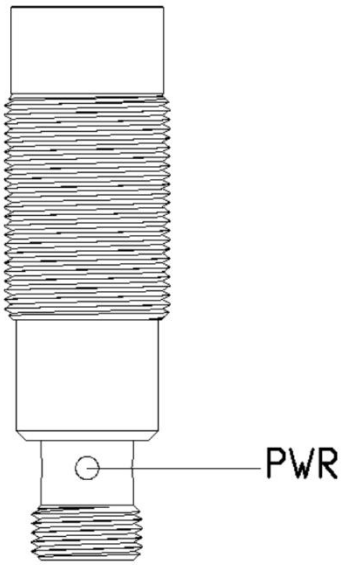

of each state of the LED light are as follows:

Name	Color	State	Description
PWR	green light ●	Lights off ●	No power or reader failure
		Green Steady ●	work fine
		Green flashing (20 HZ) ● ● ● ● ●	Flashing frequency 20 HZ, with data carrier in recommended working area
		Green flashing (10 HZ) ● ● ● ● ●	Flashing frequency 10 HZ, there is a data carrier in the reading area
		Green flashing(2 HZ) ● ● ● ● ●	Flashing frequency 2 HZ, flashing 2 times, command received and executed correctly
		Green flashing(2 HZ) ● ● ●	Flashing frequency 2 HZ, flashing 1 time, command received but execution error
		Green flashing (0.5 HZ) ● ● ● ● ●	The flicker frequency is 0.5 HZ, and the radio frequency is abnormal

Note : When multiple states exist at the same time, the slower the frequency of flashing, the higher the priority. For example, if there is communication and there is a tag in the reading area at the same time, it will flash at a frequency of 2HZ first.

4.2.3 RF-HY18R-R4 Installation Dimensions

The RF-HY18R-R4 fuselage has its own thread, and the thread size is M 18 * 1.0. The specific specifications are shown in the figure below :

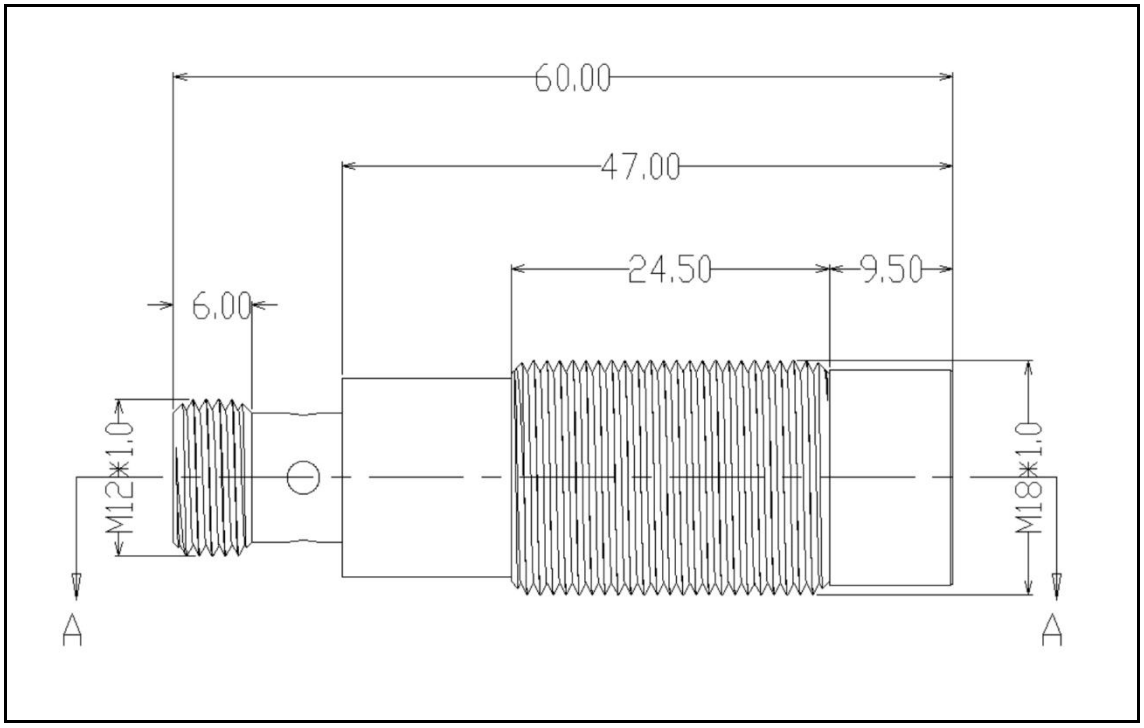
60.00
47.00
24.50
9.50
6.00
M12*1.0
M18*1.0
A
A

4. 3 RF-HY18RRA

4.3.1 Specifications of RF- HY18RRA

The technical specifications of RF-HY18RRA are as follows :

Specifications	Product number	RF-HY18RRA -R4	RF-HY18RRA -R2
	Reading distance	0~30mm (related to the data carrier)	
	Communication Interface	RS485	RS 232
	communication rate	9600 ~ 115200bit/s	
	voltage	9~30VDC	
	average current	< 0.05A@24VDC	
	indicator light	1 LED indicator	
physical parameters	Dimensions	M18×75mm	
	fixed type	Nut fixed , thread M18 * 1.0	
	Shell material	Stainless steel+ABS	
	Shell color	silver+black	
	Total Weight	40g _ _	

4.3.2 Definition of RF-HY18RRA LED

RF-HY18RRA reader has 1 LED light to indicate the current working status . The distribution of the LEDs is shown in the figure below.

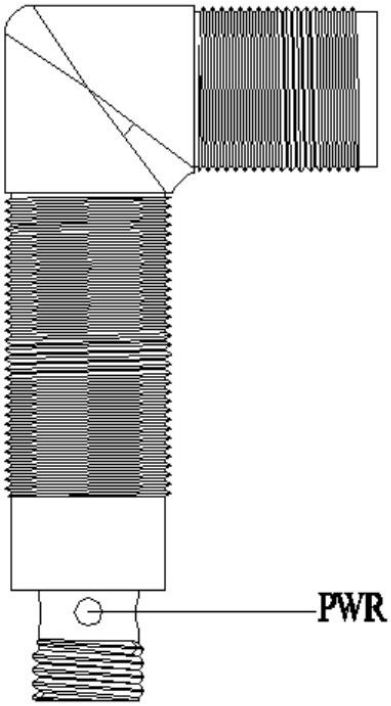

of each state of the LED light are as follows:

Name	Color	State	Description
PWR	green light ●	Lights off ●	No power or reader failure
		Green Steady ●	work fine
		Green flashing (20 HZ) ● ● ● ● ●	Flashing frequency 20 HZ, with data carrier in recommended working area
		Green flashing (10 HZ) ● ● ● ● ●	Flashing frequency 10 HZ, there is a data carrier in the reading area
		Green flashing(2 HZ) ● ● ● ● ●	Flashing frequency 2 HZ, flashing 2 times, command received and executed correctly
		Green flashing(2 HZ) ● ● ●	Flashing frequency 2 HZ, flashing 1 time, command received but execution error
		Green flashing (0.5 HZ) ● ● ● ● ●	The flicker frequency is 0.5 HZ, and the radio frequency is abnormal

Note : When multiple states exist at the same time, the slower the frequency of flashing, the higher the priority. For example, if there is communication and there is a tag in the reading

area at the same time, it will flash at a frequency of 2HZ first.

4.3.3 RF-HY18RRA installation dimensions

The RF-HY18RRA fuselage has its own thread, and the thread size is M 18 * 1.0. The specific specifications are shown in the figure below :

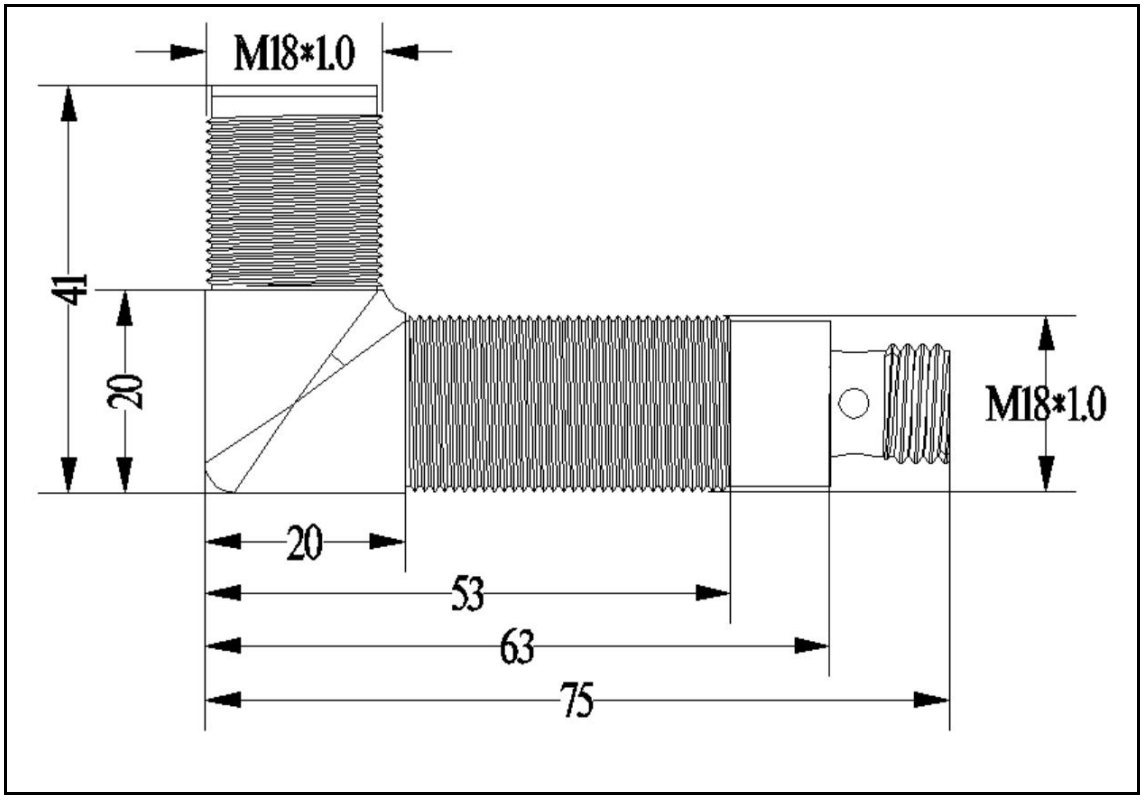

4. 4 RF-HY30R

4.4.1 Specifications of RF-HY30R

The technical specifications of RF-HY30R are as follows :

Specifications	Product number	RF-HY30R -R4	RF-HY30R -R2
	Reading distance	0~60mm (related to the data carrier)	
	Communication Interface	RS485	RS232
	communication rate	9600 ~ 115200bit/s	
	voltage	9~30VDC	
	average current	< 0.05A@24VDC	
	indicator light	1 LED indicator	
physical parameters	Dimensions	M30×61mm	
	fixed type	Nut fixed , thread M30 * 1.5	
	Shell material	Stainless steel+ABS	
	Shell color	silver+black	
	Total Weight	70g _ _	

4.4.2 Definition of RF-HY30R LED

RF-HY30R reader has 1 LED light to indicate the current working status . The distribution of the LEDs is shown in the figure below.

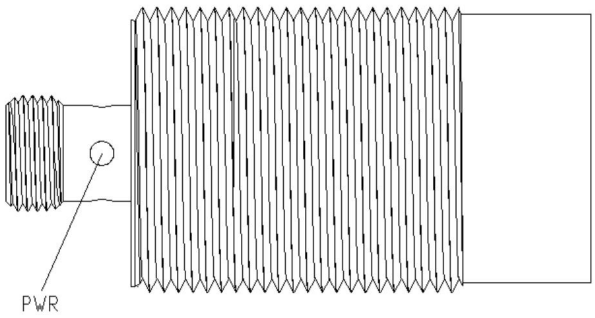

of each state of the LED light are as follows:

Name	Color	State	Description
PWR	green light ●	Lights off ●	No power or reader failure
		Green Steady ●	work fine
		Green flashing (20 HZ) ● ● ● ● ●	Flashing frequency 20 HZ, with data carrier in recommended working area
		Green flashing (10 HZ) ● ● ● ● ●	Flashing frequency 10 HZ, there is a data carrier in the reading area
		Green flashing(2 HZ) ● ● ● ● ●	Flashing frequency 2 HZ, flashing 2 times, command received and executed correctly
		Green flashing(2 HZ) ● ● ●	Flashing frequency 2 HZ, flashing 1 time, command received but execution error
		Green flashing (0.5 HZ) ● ● ● ● ●	The flicker frequency is 0.5 HZ, and the radio frequency is abnormal

Note : When multiple states exist at the same time, the slower the frequency of flashing, the higher the priority. For example, if there is communication and there is a tag in the reading area at the same time, it will flash at a frequency of 2HZ first.

4.4.3 RF-HY30R Installation Dimensions

The RF-HY30R body comes with threads, and the thread size is M 30 * 1.5. The specific specifications are shown in the figure below :

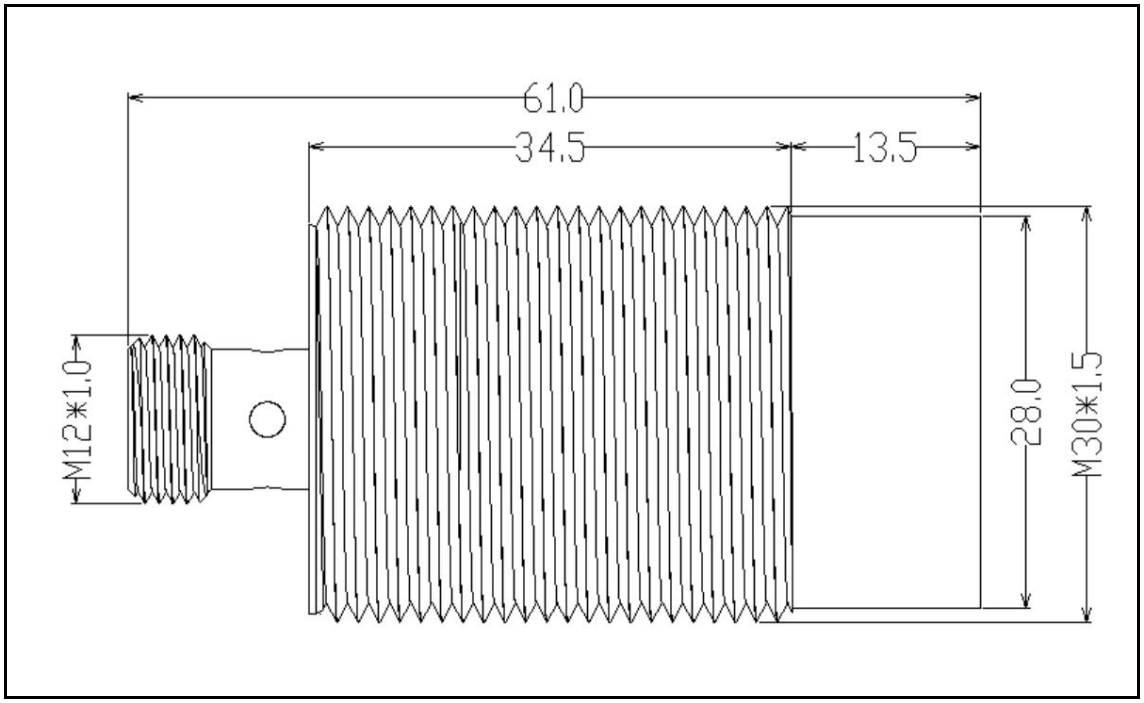
61.0
34.5
13.5
M12*1.0
28.0
M30*1.5

4. 5 RF-HZ50L

4.5.1 Specifications of RF-HZ50L

The technical specifications of RF-HZ50L are as follows :

Specifications	Product number	RF-HZ50L -R4	RF-HZ50L -TP
	Reading distance	0~80mm (related to the data carrier)	
	Communication Interface	RS485	TCP Ethernet
	communication rate	9600 ~ 115200bit/s	10M/100M adaptive
	voltage	9~30VDC	
	average current	< 0.07A@24VDC	
	indicator light	4 LED indicators	
physical parameters	Dimensions	68.4×50×30mm	
	fixed type	4 M4 screw holes	
	Shell material	PC + ABS	
	Shell color	black	
	Total Weight	120g _	

4.5.2 Definition of RF-HZ50L LED

The RF-HZ50L reader/ writer provides 4 LEDs, namely RUN, LINK, RESULT and TAG. The distribution of the LEDs is shown in the figure below.

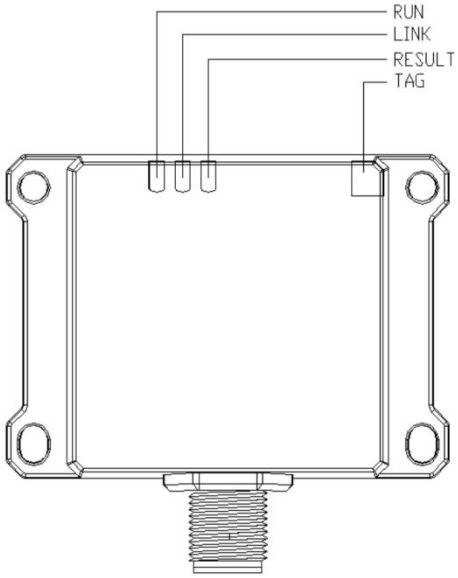

of each LED light is as follows:

Name	Color	State	Description
RUN	Green-red light	Green Steady	System Power OK
		Red Steady	System exception
		Red long flash 1 time	000ms when it flashes once
		Red long flash 2 times	000ms when it flashes once
		Red short flash 2 times	100ms when it flashes once
		Light off	There is no power or the system power supply is abnormal
LINK	green light	Green Steady	The host has established a TCP connection with the reader
		flashing	Communicating , currently using TCP communication
		flashing	Communicating , currently using RS485 communication
		Light off	no connection
RESULT	green light	Green Steady	Command executed successfully
		Light off	Command execution failed or no command execution
TAG	Green-orange	Green Steady	TAG signal is excellent

	Green orange light ● ●	Orange Steady ●	TAG signal is good
		flashing ● ● ●	TAG signal critical
		Light off ●	No TAG signal

Note : When RUN has a red light , the surface product is working abnormally . If the fault persists, please contact the manufacturer for technical consultation.

4. 5.3 RF-HZ50L Installation Dimensions

The size of RF-HZ50L is 68.4x50x30mm , including 4 M4 mounting holes, and the depth of the mounting holes is 6mm , as shown in the figure below.

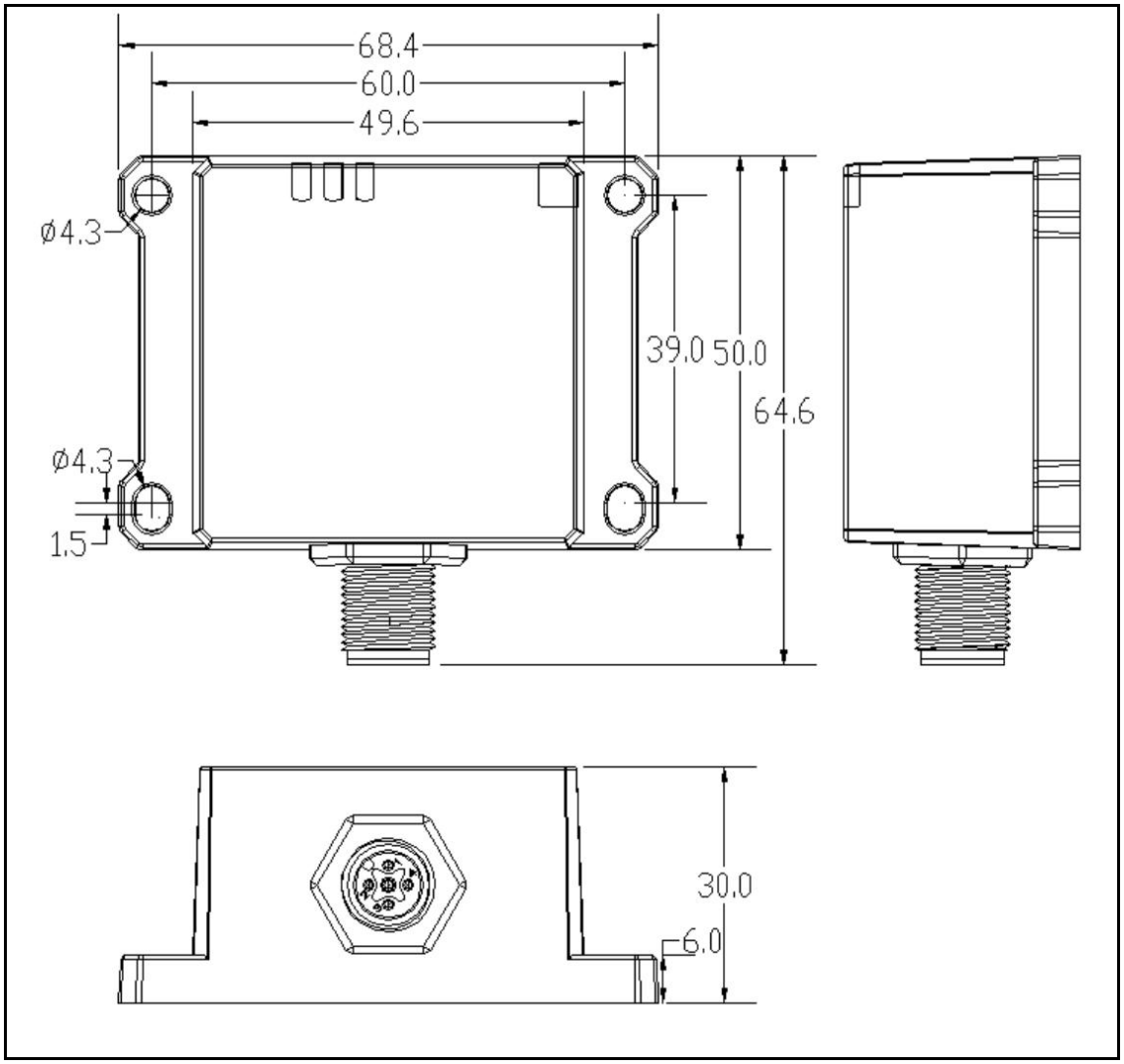

4. 6 RF-HZ80L

4.6.1 Specifications of RF-HZ80L

The technical specifications of RF-HZ80L are as follows :

Specifications	Product number	RF-HZ80L -R4	RF-HZ80L -TP
	Reading distance	0~110mm (related to the data carrier)	
	Communication Interface	RS485	TCP Ethernet
	communication rate	9600 ~ 115200bit/s	10M/100M adaptive
	voltage	9~30VDC	
	average current	< 0.07A@24VDC	
	indicator light	4 LED indicators	
physical parameters	Dimensions	99×80×40mm	
	fixed type	4 M5 screw holes	
	Shell material	PC + ABS	
	Shell color	black	
	Total Weight	About 270g _	

4.6.2 Definition of RF-HZ80L LED

RF-HZ80L reader provides 4 LEDs, which are RUN, LINK , RESULT and TAG. The distribution of the LEDs is shown in the figure below.

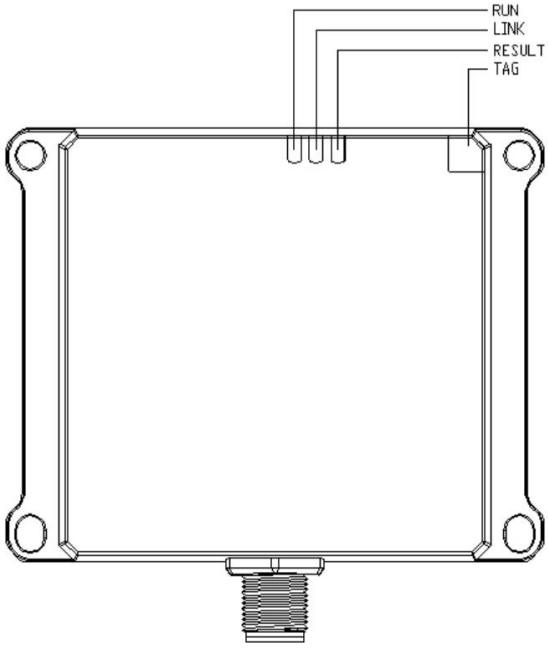

of each LED light is as follows:

Name	Color	State	Description
RUN	Green-red light	Green Steady	System Power OK
		Red Steady	System exception
		Red long flash 1 time	000ms when it flashes once
		Red long flash 2 times	000ms when it flashes once
		Red short flash 2 times	100ms when it flashes once
		Light off	There is no power or the system power supply is abnormal
LINK	green light	Green Steady	The host has established a TCP connection with the reader
		flashing	Communicating , currently using TCP communication
		flashing	Communicating , currently using RS485 communication
		Light off	no connection
RESULT	green light	Green Steady	Command executed successfully
		Light off	Command execution failed or no

			command execution
TAG _	Green-orange light ● ●	Green Steady ●	TAG signal is excellent
		Orange Steady ●	TAG signal is good
		flashing ● ● ●	TAG signal critical
		off ●	No TAG signal

Note : When RUN has a red light , it indicates that the product is working abnormally . If the fault persists, please contact the manufacturer for technical consultation.

4.6.3 RF-HZ80L Installation Dimensions

The size of RF-HZ80L is 99x80x40mm , including 4 M 5 mounting holes, and the depth of the mounting holes is 8mm , as shown in the figure below.

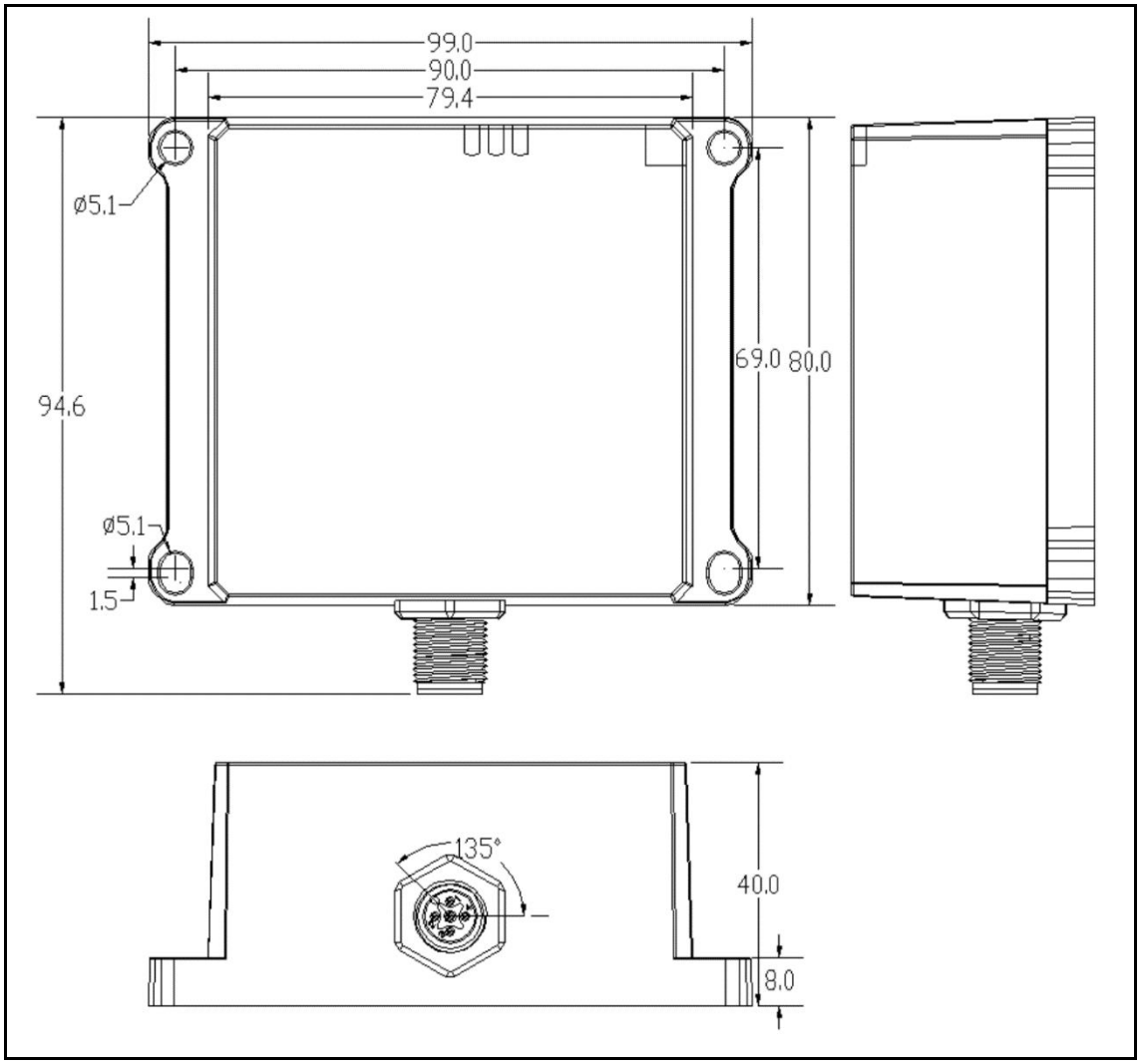

4. 7RF-HZ100L

4.7.1 Specifications of RF-HZ100L

The technical specifications of RF-HZ100L are as follows :

Specifications	Product number	RF-HZ100L -R4	RF-HZ100L -TP
	Reading distance	0~150mm (related to the data carrier)	
	Communication Interface	RS485	TCP Ethernet
	communication rate	9600 ~ 115200bit/s	10M/100M adaptive
	voltage	9~30VDC	
	average current	< 0.07A@24VDC	
	indicator light	5 LED indicators	
physical parameters	Dimensions	100×100×38.5mm	
	fixed type	2 M6 screw holes	
	Shell material	PC + ABS	
	Shell color	black	
	Total Weight	About 380 g	

4.7.2 Definition of RF-HZ100L LED

The RF-HZ100L reader provides 5 LEDs, which are RUN, LINK, RESULT and 2 TAGs, and the display of the 2 TAG LEDs is synchronous . The distribution of the LEDs is shown in the figure below.

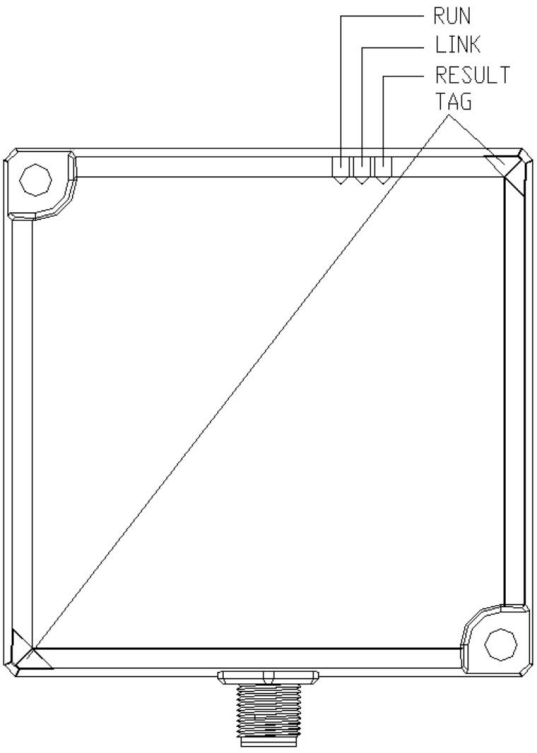

of each LED light is as follows:

Name	Color	State	Description Description
RUN	Green-red light	Green Steady	System Power OK
		Red Steady	System exception
		Red long flash 1 time	000ms when it flashes once
		Red long flash 2 times	000ms when it flashes once
		Red short flash 2 times	100ms when it flashes once
		Light off	There is no power or the system power supply is abnormal
LINK	green light	Green Steady	The host has established a TCP connection with the reader

		flashing ● ● ●	Communicating , currently using TCP communication
		flashing ● ● ●	Communicating , currently using RS485 communication
		Light off ●	no connection
RESULT	green light ●	Green Steady ●	Command executed successfully
		Light off ●	Command execution failed or no command execution
TAG _	Green-orange light ● ●	Green Steady ●	TAG signal is excellent
		Orange Steady ●	TAG signal is good
		flashing ● ● ●	TAG signal critical
		Light off ●	No TAG signal

Note : When RUN has a red light , the surface product is working abnormally . If the fault persists, please contact the manufacturer for technical consultation.

4.7.3 RF-HZ100L Installation Dimensions

The size of RF-HZ100L is 10 0 x100x38.5mm , including 2 M 6 mounting holes, the depth of the mounting holes is 1 6mm , as shown in the figure below.

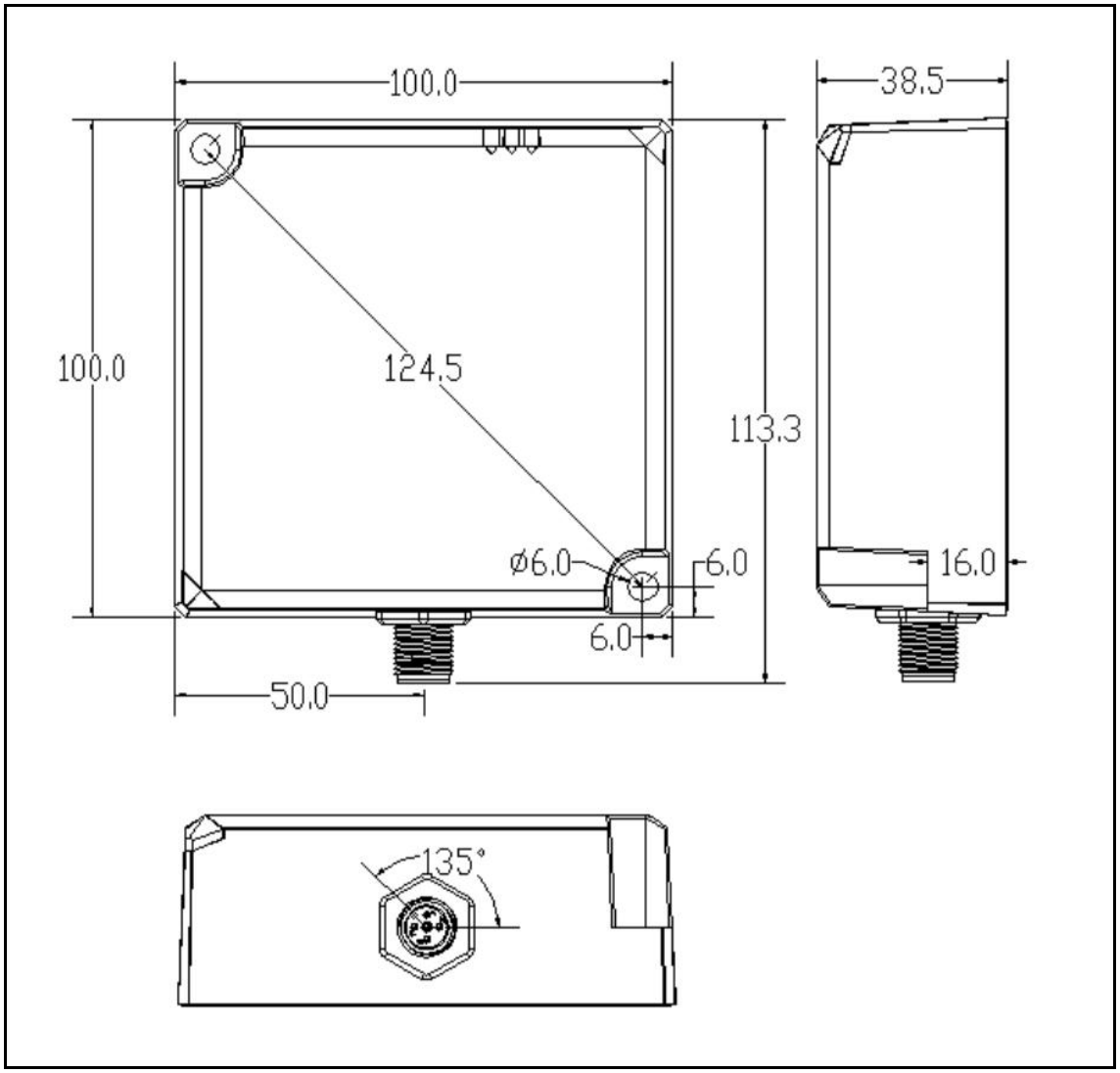
100.0
38.5
100.0
124.5
113.3
Ø6.0
6.0
16.0
6.0
50.0
135°

4.8 RF-HZ40L

4.8.1 Specifications of RF-HZ40L

The technical specifications of RF-HZ40L are as follows :

Specifications	Product number	RF-HZ 4 0L -R4	RF-HZ 4 0L -TP
	Reading distance	0~60mm (related to the data carrier)	
	Communication Interface	RS485	TCP Ethernet
	communication rate	9600 ~ 115200bit/s	10M/100M adaptive
	voltage	9~30VDC	
	average current	< 0.07A@24VDC	
	indicator light	4 LED indicators	
physical parameters	Dimensions	40×40×66mm	
	fixed type	2 M5 screw holes	
	Shell material	PC + ABS	
	Shell color	blue+black	
	Total Weight	about 100g _	

4.8.2 Definition of RF-HZ40L LED

The RF-HZ40L reader/ writer provides 4 LEDs, namely RUN and TAG, and each

type of LED has 2 LED lights for synchronous display . The distribution of the LEDs is shown in the figure below.

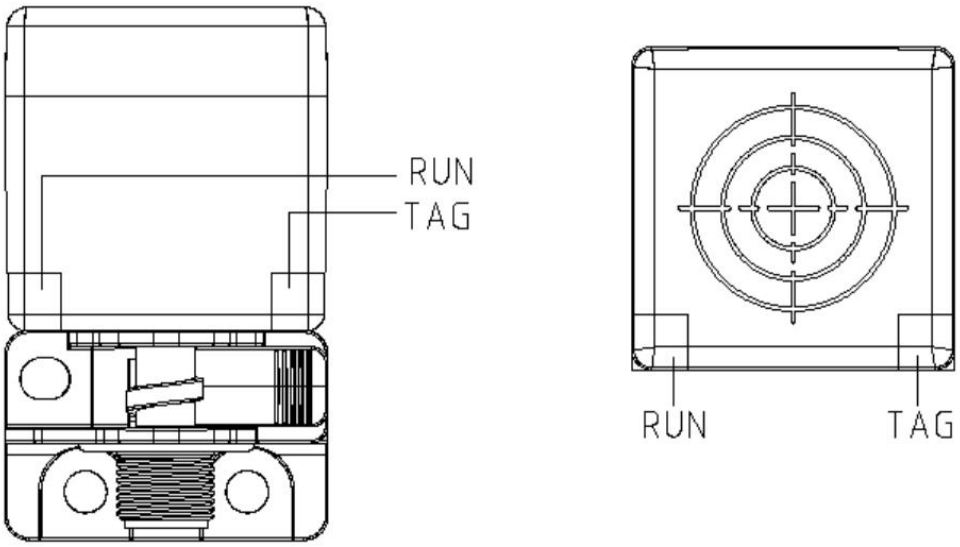

of each LED light is as follows:

Name	Color	State	Description
RUN	Green-red light	long green flash	Flashing frequency 1Hz System Power OK TCP interface: No TCP connection established
		Green Steady	TCP interface: TCP connection established
		Green short flash 1 time	Flashing frequency 1 0Hz Received the command but failed to execute it successfully
		Green short flash 2 times	Flashing frequency 1 0Hz The command was received and executed successfully
		Red Steady	System exception
		Red long flash 1 time	000ms when it flashes once
		Red long flash 2 times	000ms when it flashes once
		Red short flash 2	100ms when it flashes once

		times ● ● ● ● ●	
		Light off ●	There is no power or the system power supply is abnormal
TAG _	Green-orange light ● ●	Green Steady ●	TAG signal is excellent
		Orange Steady ●	TAG signal is good
		flashing ● ● ●	TAG signal critical
		Light off ●	No TAG signal

Note : When RUN has a red light , the surface product is working abnormally . If the fault persists, please contact the manufacturer for technical consultation.

4.8.3 RF-HZ40L Installation Dimensions

The size of RF-HZ40L is 40×40×66 mm , including 2 M 5 mounting holes, as shown in the figure below.

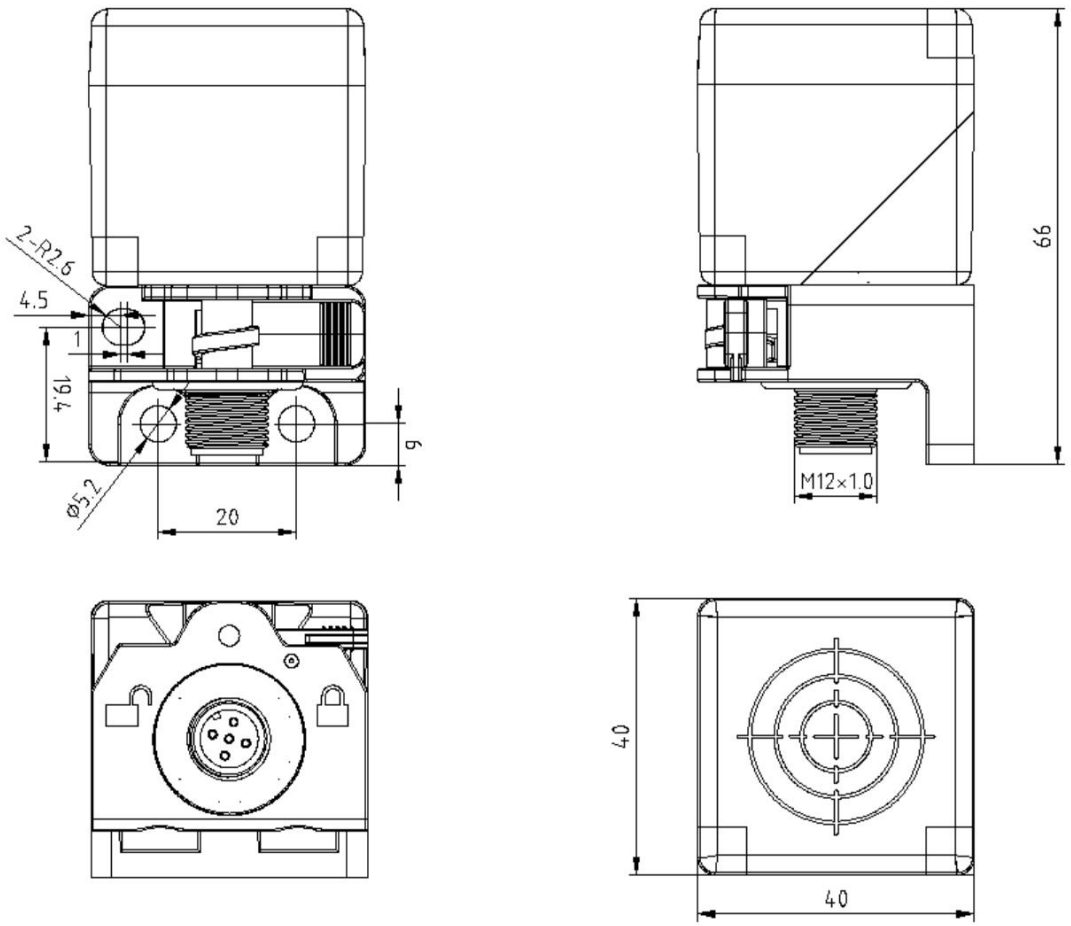

5. product installation

5.1 Precautions for installation

In order to prevent product malfunction, malfunction, or negative impact on performance and equipment, please observe the following items.

5.1.1 Precautions for installing the reading head

1. The reading head should be installed away from metal

When the read head is close to the metal, the metal will absorb the electromagnetic wave and consume energy, which will greatly reduce the reading distance.

Square read head installation restrictions:

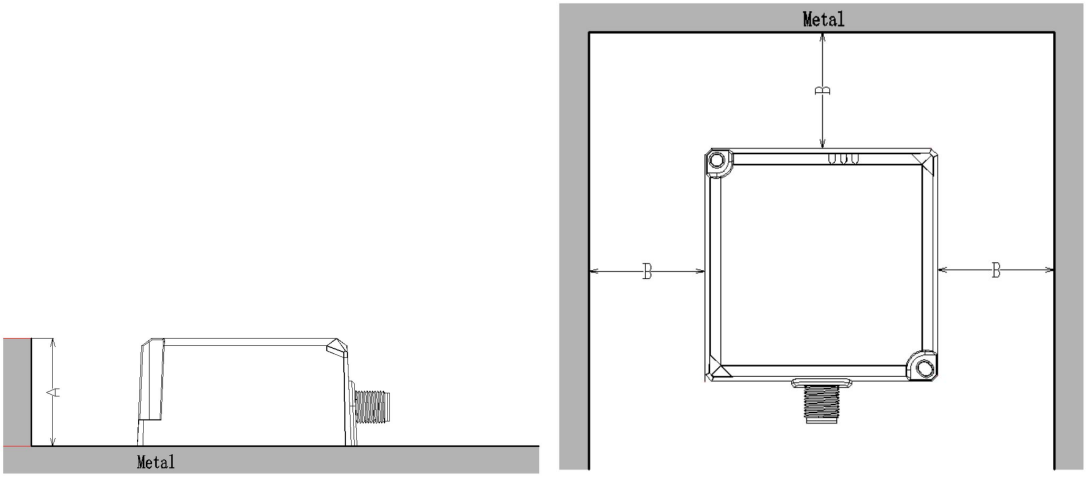

When installing square read heads, please refer to the following installation restrictions:

	A	B
RF-HZ50L	< 30mm	> 25mm
RF-HZ80L	< 40mm	>40mm
RF-HZ100L	< 40mm	>50mm

Cylindrical read head installation restrictions:

Non-metallic materials should be used as much as possible for the installation of cylindrical reading heads. If the use of metal materials cannot be avoided, please refer to the following restrictions:

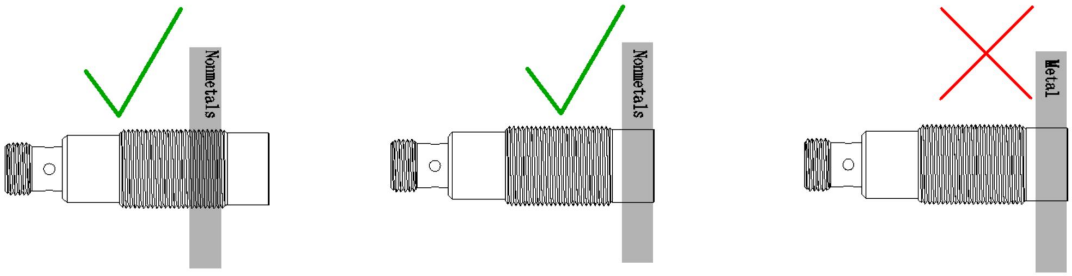

Note: A red cross indicates that this installation method is not recommended, and a green hook indicates that this installation method can be used . It is recommended to use non-metallic materials to mount the bracket.

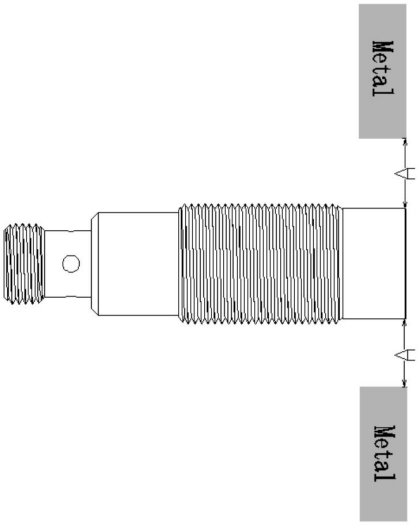

When installing cylindrical read heads, please refer to the following installation restrictions:

	RF-H Y 18R	RF-HY30R
A	>5mm	>10mm

2. When installing multiple reading heads, pay attention to the installation distance between the two reading heads

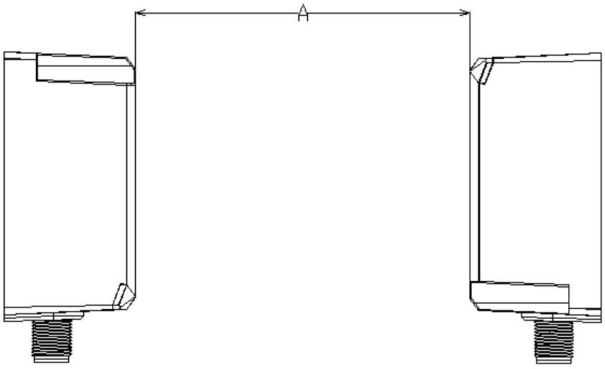

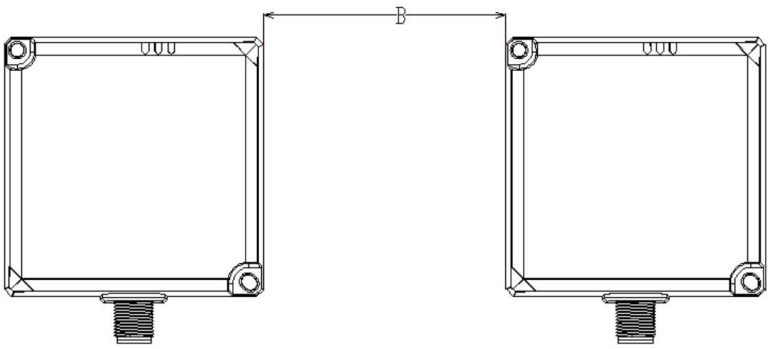

When installing the read head, please refer to the following installation restrictions:

	A	B
RF-HY18R	> 50mm	> 20mm
RF-HY30R	> 80mm	> 40mm
RF-HZ50L	> 200mm	> 80mm
RF-HZ80L	> 300mm	> 100mm
RF-HZ100L	> 400mm	> 120mm

3. The installation of the reading head should face and face the data carrier

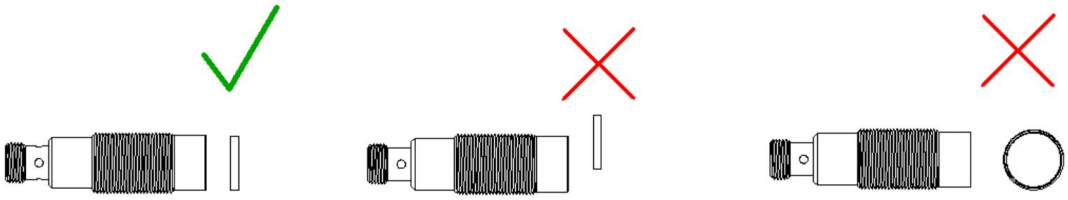

5.1.2 Precautions for data carrier installation

1. Non-anti-metal data carrier installation

The installation of non-anti-metal data carrier needs to reserve a buffer zone with the metal, and the buffer zone needs to be filled with non-metallic materials. The installation example is as follows:

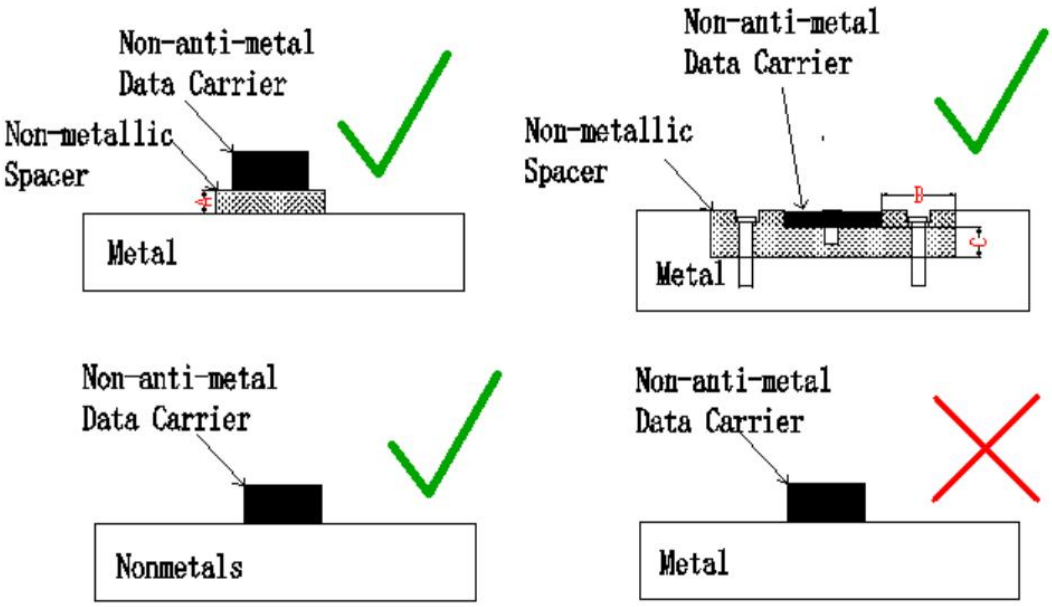

Non-anti-metal data carriers are installed in a metal environment, the following restrictions need to be met:

A	B	C
> 5mm + maximum data carrier size*10%	> 5mm	Reference A

Note: If the data carrier size is ϕ5 0*3.5, then A is 5+ 50 * 10%=10mm;

If the data carrier size is 8 6*54*0.1, then A is 5+ 86 * 10%=13.6mm;

2. Anti-metal data carrier installation

Anti-metal data carriers are installed as follows:

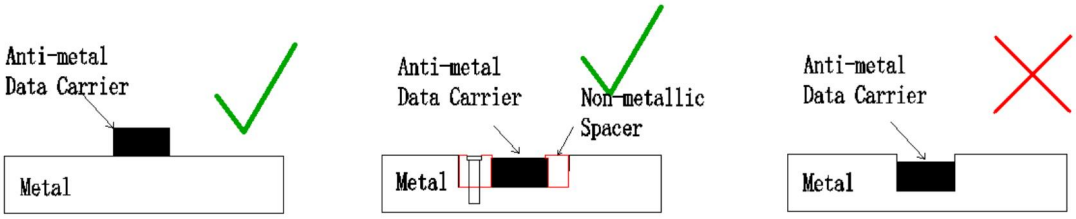

Note: If it is directly embedded in the metal installation, please make sure that the surface of the data carrier is not lower than the metal surface, otherwise the reading distance will be greatly reduced.

5.1.3 Other considerations

1. About the installation location

Please avoid installing near devices with high heat dissipation (heaters, transformers, large-capacity resistors, etc.)

Please avoid installing it near equipment with serious electromagnetic interference (large motors , transformers, transceivers, frequency converters, switching power supplies , etc.).
This product uses the frequency band of 13.56MHz to communicate with RF. Radio waves (noise) generated by transceivers, motors, frequency converters, switching power supplies, etc. may affect the communication between the product and the RF tag. Having these devices around may affect the communication between the product and the RF tag or damage the RF tag.
When using this product near these devices, please confirm the effects before use.

2. About power supply and wiring

Do not use AC power. Otherwise, there is a risk of rupture , seriously affecting the safety of personal and equipment.

Please use a power-limited current source to operate the device, that is, the power supply must have overvoltage and overcurrent protection functions . In order to prevent the power failure of this equipment , affecting the safety of other equipment ; or the failure of external equipment, affecting the safety of this equipment.

Please avoid wrong wiring. Otherwise, there is a risk of rupture and burnout. It may affect the safety of personal and equipment.

Do not bend the cable within a radius of 40mm. Otherwise there is a risk of disconnection.

3. Others

If you feel that the product is abnormal, please stop using it immediately and contact our sales representative after cutting off the

power.

5. 2 Hardware interface description

This series of equipment provides power supply and communication physical interface at the same time through M12 connector , and the communication interface can optionally support RS485 or Ethernet .

RS-485 **communication interface**

The RS-485 interface adopts A -CODE M12 male, 5- pin connector , and the pin definition is as follows :

male head	pin	symbol	Description
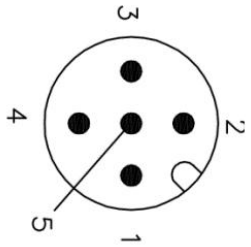	Pin1	24V	Positive power supply
	Pin2	RS485_A	R S-485 signal line A
	Pin3	0V	Negative pole of power supply
	Pin4	RS485_B	R S-485 signal line B
	Pin 5	NC	/
Precautions	1) The communication line is recommended to use shielded twisted pair; 2) Communication cable length: Max < = 5 0m; 3) Communication cable cores use 2 4AWG and above		

6. product operation

6.1 Register definition

The read and write operations of the code carrier and the configuration of the reading head are completed by accessing the registers , which are mainly divided into 4 areas:

- tag memory area
- system memory area

The specific address range of each area is defined as follows :

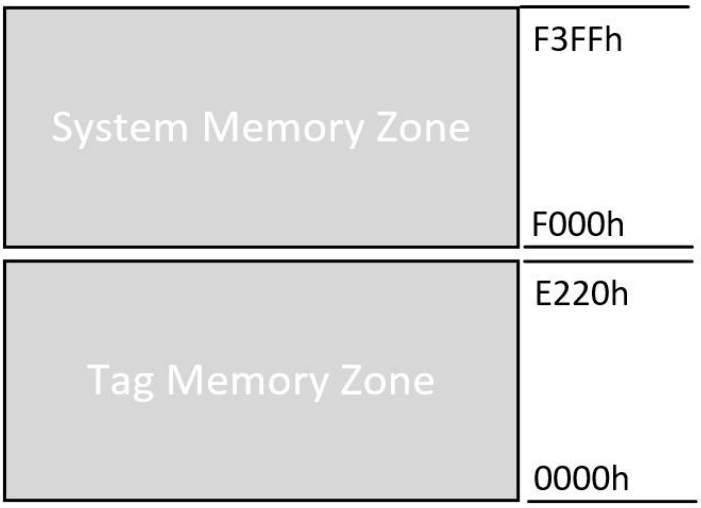

6.1.1 Tag memory area

The tag memory area is divided into two parts : user memory area and tag ID area .

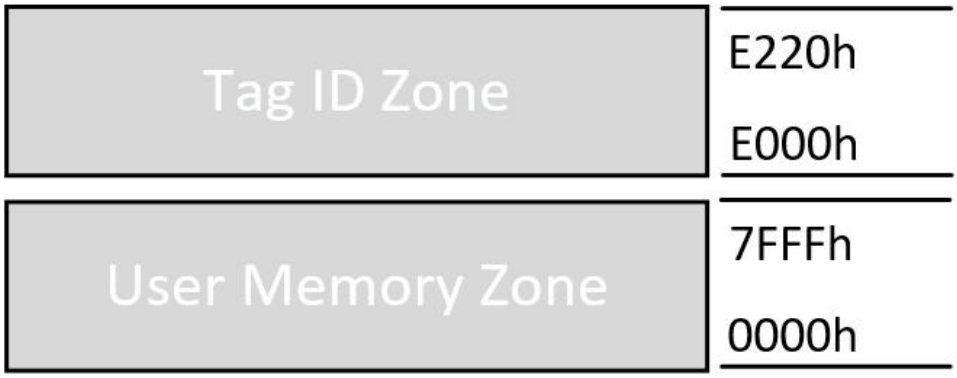

Tag ID area

The tag ID area is mainly a mapping to the tag UID, and this area is read-only. The specific mapping relationship is as follows:

initial address	end address	number of registers	operation type	Description
E000H _	E003H _	4	R ①	ISO 15693 protocol tag ID, fixed length of 8 bytes
E004H _	E004H _	1	R	ISO 15693 protocol data carrier USER size, number of bytes
E 100 H	E 100 H	1	R	ISO 14443A Protocol data carrier SAK
E 101 H	E101H _	1	R	ISO 14443A protocol data carrier UID length②

E 102 H	E 106 H	5	R	ISO 14443A protocol data carrier UID

1) : R is the abbreviation of Readable , indicating that the register can be read; W is the abbreviation of Writable , indicating that the register can be written ;
2) : The ISO 14443A protocol tag UID has three lengths of 4, 7 , and 10 bytes , depending on the tag chip;

user memory area

the user memory area is based on the size of the tag user memory , mapped to the user memory area inside the read head to access the tag, readable and writable. Taking NXP's ICODE SLIX chip as an example , its user memory is 112 bytes , the minimum address mapped to the user memory area is 0, and the maximum address is 55 (37 H) . If the access exceeds the maximum memory address of the data carrier , an error will be returned.

6.1.2 System memory area

The system memory area is divided into two parts : the RFID status area and the configuration area , and the configuration area includes the basic configuration area and the working mode configuration area.

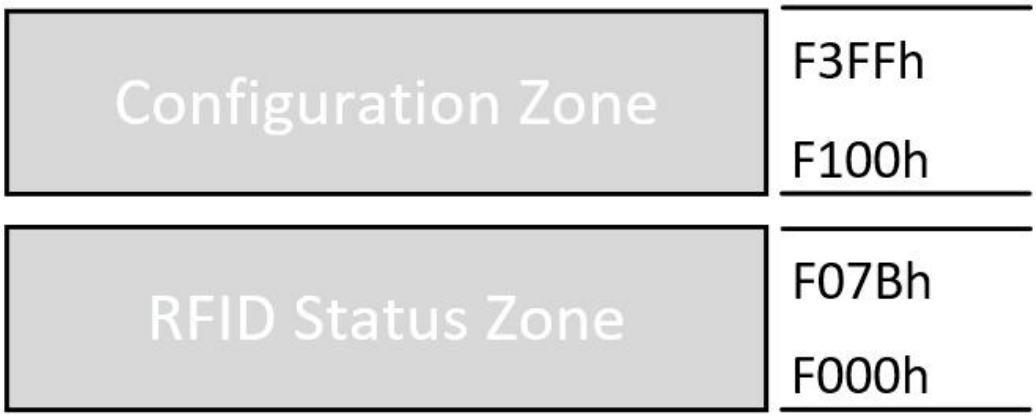

Basic configuration area

The basic configuration mainly includes device information and connection-related parameter configuration . The registers in this part can be saved after power-off , and the configuration will take effect after power-off and restart . The specific registers and allocated addresses are as follows:

field	initial address	end address	number of registers	operation type	Description
manufacturer name	F100H	F109H	10	R	
Product Code	F10A H	F113H	10	R	
version number	F114H	F115H	2	R	
Product Serial Number	F116H	F11B H	6	R	
MAC address	F11C H	F11E H	3	R	
The port number	F11F H	F11F H	1	R	fixed value 502
IP address	F120H	F121H	2	RW	Default: 192.168.0.10
subnet mask	F122H	F123H	2	RW	Default: 255.255.255.0
gateway	F124H	F125H	2	RW	Default: 192.168.0.1

device address	F126H	F126H	1	RW	MODBUS slave address, the value is [1, 16], the default value is 1, 0 is the broadcast address
baud rate	F127H	F127H	1	RW	Slave baud rate, serial port configuration adopts N, 8, 1; 0:115200[default]; 1:57600;2:38400;3:19200;4:9600;ELSE : 115200

Working mode configuration area

The working mode configuration is mainly used to configure the working mode and parameters of the RFID, and the registers in this part can be saved after power off . RFID has an active working mode and a passive working mode. In the active working mode, RFID will automatically read the tag memory that has entered the readable area, and cache the read memory at a specific address (F 002 ~ F07BH , see the description of the relevant registers for details). The read address, length and cache time are configurable. In the passive working mode, the reader is idle by default and performs work according to the received instructions. The specific register definition is as follows:

field	initial address	end address	number of registers	operation type	Description
Operating mode	F200H	F200H	1	RW	Working mode: 0: passive working mode; 1: active working mode [default], F201~F204H are valid (address and quantity need to be set) 2: Data transmission mode . In this mode, when the tag is read, the read data will be uploaded automatically, and 0x0A 0D will be automatically added after the data , and only the data segment will be transmitted. (This mode is generally used for serial communication reading heads, and is used with cable-to-keyboard input)

cache time	F201H	F201H	1	RW	Set the storage time of the automatically read data after the tag leaves, in ms [default 100]
RFU	F202H	F202H	1	RW	Reserved, set to 0
address	F203H	F203H	1	RW	The memory address of the tag User that needs to be read [default 0]
quantity	F204H	F204H	1	RW	Number of tag memory registers to be read 0 : read tag ID [default] 1-1 20 : read data of 1-1 20 words in tag USER area ELSE : not supported
Tag Data Endianness	F205H	F205H	1	RW	0: little endian [default] 1: Big endian
Data validation	F206H	F206H	1	RW	Whether data verification is required, after reading/writing, read and verify whether the data is correct, verification requires additional operation time bit0 : whether to read verification bit1 : whether to write verification

RFID protocol configuration area

The RFID protocol configuration area is mainly used to configure the protocols supported by RFID . The specific register definition is as follows:

field	initial address	end address	number of registers	operation type	Description
RFID protocol	F 3 00 H	F 3 00 H	1	RW	Protocols supported by RFID : 0: ISO 15693 [Default] 1: ISO 14443A

R FID status area

The RFID status area is mainly used to record the current working status of the equipment , and the control system can diagnose the equipment and the application

environment through the status. The specific register definition of the RFID status area is as follows:

field	initial address	end address	number of registers	operation type	Description
RFID status	F000H	F000H	1	R	Indicates the status of the current RFID
error code	F001H	F001H	1	R	For specific definitions, see subsequent chapters
read address	F002H	F00 2H _	1	R	in active working mode , for F203H
Number of reads	F003H	F00 3H _	1	R	in active working mode , for F204H
memory mapped area	F004H	F07 B H	120	R	Read data in active mode :

The detailed definition of RFID status (F000 H) is as follows :

bit address	logo	definition
bit0	ready	Running state, the reader is running normally and set
bit1-2	mode	Working mode, same as register F200 H: 0: passive working mode; 1: active working mode
bit3	RFU	The value is 0
bit4	TP	Tag Present , indicating whether a tag is in the read zone: 0: no data carrier 1: There is a data carrier, but it does not mean that the specified tag memory has been read;
bit5	Cached	Indicates whether there is currently a cache tag: 0: not cached 1: cached, the specified tag memory reading is completed, and this signal disappears when the cache time (F201 H register) ends after the tag leaves
bit6	Bu s y	Indicates the task status of the current device: 0: idle 1 : Executing tasks, including executing commands sent by the host computer in active working mode and passive working mode

bit7	Done	Asserted to indicate that the command was executed successfully
bit8	Error _	Set to indicate a command execution error [not a product failure]
bit9-10	RssiLevel	Tag signal strength level: 0: No signal 1: The signal is weak, generally occurs in the critical area 2: The signal is general, and it can work statically when the electromagnetic interference is not serious 3: The signal is strong, and it is recommended that the tag be installed in an area with strong signal during on-site application
bit11-1 4	R F	The value is 0
bit1 5	RFIDProtocol	RFID protocol: 0: ISO 15693 1 : ISO 14443A

The memory mapping area is mainly used in the active working mode. It is a memory mapping for reading parameters and reading results in the active working mode. When the Cache d signal (F000 H, bit5) is set , the data in the memory mapping area effective .

6.2 MODBUS protocol support

different communication methods use different communication protocols . Before actual application , please confirm the communication methods supported by the device . For serial communication devices , including RS485 and RS232 , MODBUS RTU protocol is supported . For network port devices, MODBUS TCP protocol is supported .

communication method	Serial port (RS485)	ethernet
Protocol	MODBUS RTU	MODBUS TCP

6.2.1 MODBUS RTU device configuration

In a serial communication network , RFID devices are used as slave stations . When communicating with the main equipment such as PLC, the way of question and answer is adopted, which is initiated by the main equipment.

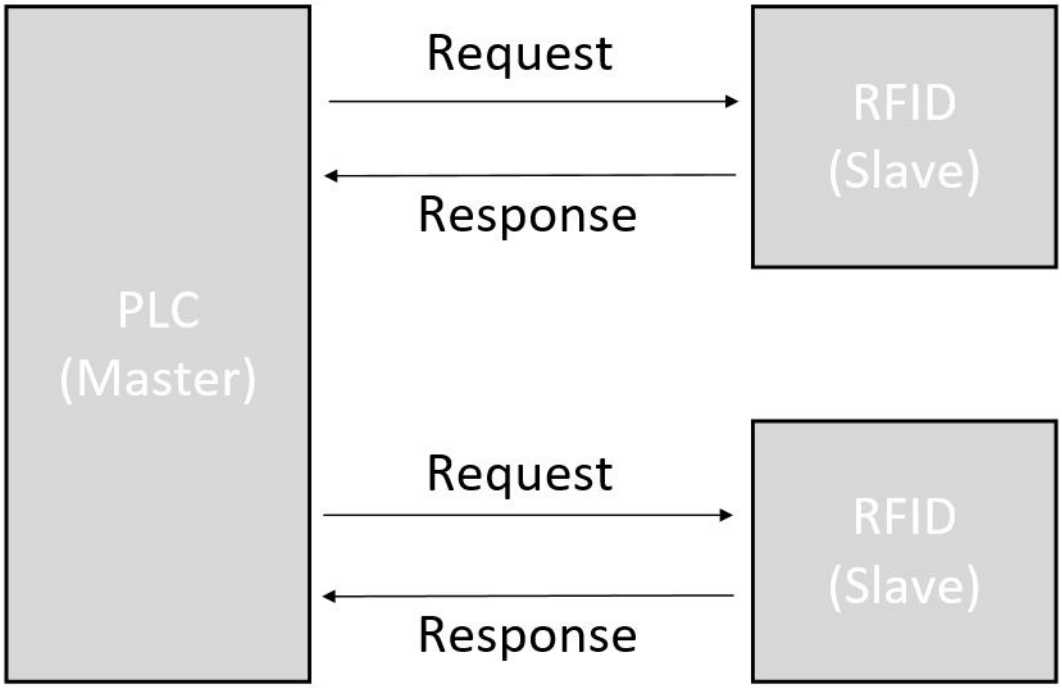

To establish communication, you need to pay attention to the device address and serial port configuration parameters. The default device address is 1, and the device address can be configured according to the actual situation during use. When there are multiple devices in the network, each slave device needs to be configured with a different address, and the master device controls each slave device through the address in turn. Multiple devices are connected to the serial network in parallel.

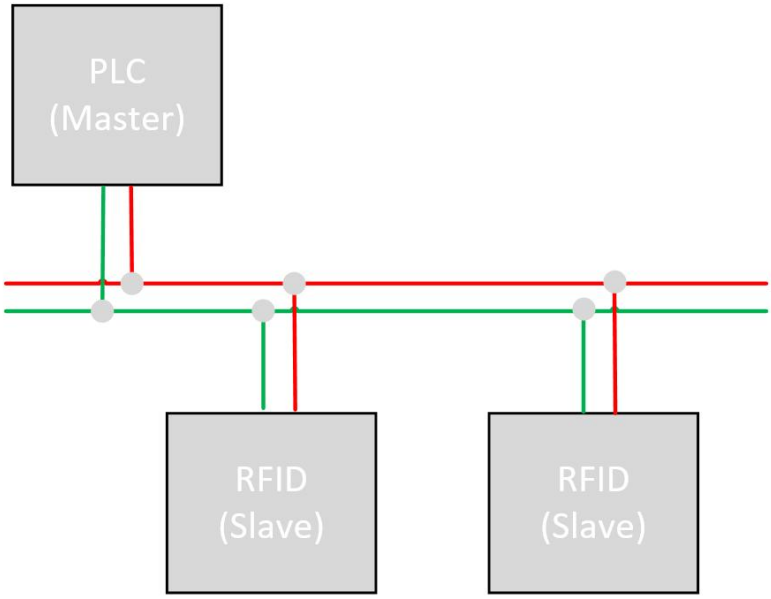

default serial port configuration of the slave device is as follows :

index	value

baud rate	Default 1 15200 , configurable
Check Digit	NONE
data bit	8 bits
stop bit	1 person

6.2.2 MODBUS TCP device configuration

In an Ethernet communication network , the RFID device acts as the server, and the PLC acts as the client. A connection needs to be established before communication, and the connection is initiated by the client. The communication adopts the way of question and answer, initiated by PLC.

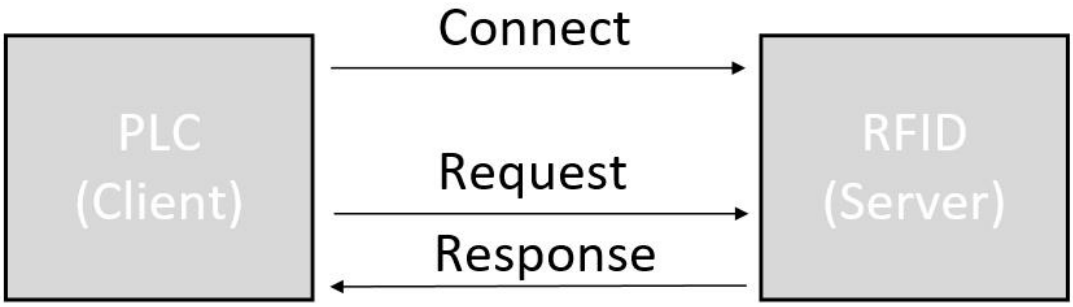

you need to configure the IP address. The default IP address of RFID is 192.168.0.10 , and the fixed port number of MODBUS TCP is 502 . Before establishing a connection, it is necessary to confirm that the PLC and RFID are in the same network segment . When multiple devices are connected to the network , each RFID needs to be configured with a different IP address , and multiple devices can be connected together through a switch .

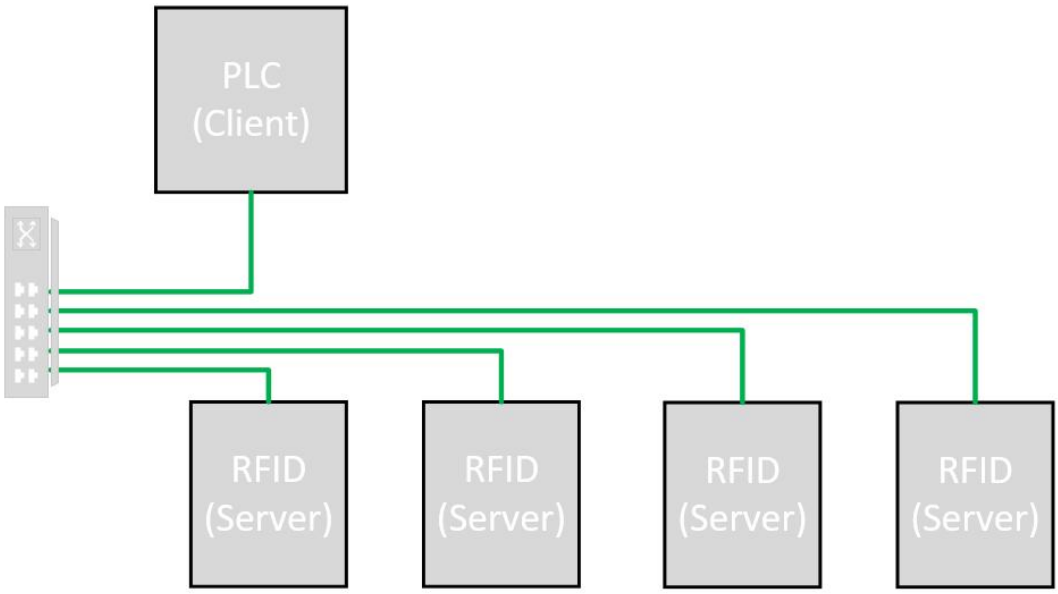

6.2.3 Commands supported by the device

The MODBUS commands supported by this device are as follows :

command code		Description
hexadecimal	decimal	
0 3	3	read multiple registers
0 6	6	write a single register
1 0	1 6	write multiple registers
5	5	write a single coil

The MODBUS protocol defines a simple protocol data unit (PDU) independent of the underlying communication layer. Mapping of the MODBUS protocol on a particular bus or network can introduce some additional fields on the Application Data Unit (ADU).

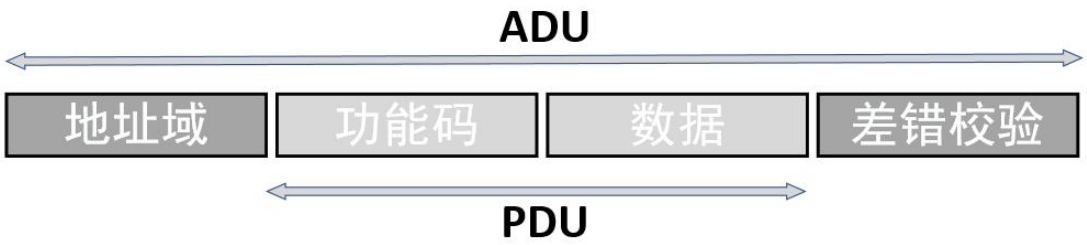

MODBUS RTU ADU

MODBUS RTU includes address field , PDU and error check , where the address field is the device address , and the error check bit is CRC check .

device address	function code	data	CRC check Lo Hi
1byte	1byte	N bytes	2 bytes MODBUS RTU

- Device address: slave station device address, networking application 1-16 , point -to-point communication 0
- CRC check : CRC 16 - MODBUS , check all the previous data

MODBUS TCP ADU

MODBUS RTU contains the address field and PDU , where the address field is the MBAP message header

MBAP header				function code	data
transaction meta identifier Hi Lo	protocol identifier Hi Lo	length Hi Lo	unit identifier		
2 bytes	2 bytes	2 bytes	1byte	1byte	N bytes

- Transaction Meta-Identifier: An identifier for a transaction
- Protocol identifier: MODBUS = 0
- Length: the number of following bytes
- Unit identifier : default FFH

1. Read multiple registers

The request ADU to read multiple registers is as follows :

protocol	address field					function code	data		error checking
	transaction meta identifier	protocol identifier	length	unit identifier	device address	command code 3 h	address H i Lo	quantity Hi Lo	CRC Lo Hi
RTU	——	——	——	——	1byte	1byte	2 bytes	2 bytes	2 bytes
TCP	2bytes _	2bytes _	2bytes	1 byte	——				——

- Transaction Meta-Identifier: An identifier for a transaction
- Protocol identifier: MODBUS = 0
- Length: the number of the following bytes , here is 6
- Unit identifier : default FFH
- Address: slave station device address, networking application 1-16 , point -to-point communication 0
- Command code : The command code for reading multiple registers is fixed at 3
- First register address : the address of the first register to be read
- Number of registers : The number of registers to be read . When the read area is the tag memory area , the value range is 1≤N≤1 20 , and in other cases, the value range is 1≤N≤1 23

ADU for reading multiple registers is as follows :

protocol	address field					function code	data		error checking
	transaction meta identifier	protocol identifier	length	unit identifier	device address	command code 3 h	Bytes	register value Hi Lo	CRC Lo Hi
RTU	——	——	——	——	1byte	1byte	1 bytes	2bytes (register 1)	2 bytes
TCP	2bytes _	2bytes _	2bytes	1 byte	——				——
								...	

2bytes (register N)

- Command code : consistent with the request
- Number of bytes read: 2 times the number of registers
- Register value: the value of the register to be read

abnormal response ADU for reading multiple registers is as follows :

protocol	address field					function code	data	error checking
	transaction meta identifier	protocol identifier	length	unit identifier	device address	command code 8 3 H	error code	CRC Lo Hi
RTU	——	——	——	——	1byte	1byte	1byte	2 bytes
TCP	2bytes _	2bytes _	2bytes	1 byte	——			——

2. Write a single register

A DU to write a single register is as follows :

protocol	address field					function code	data		error checking
	transaction meta identifier	protocol identifier	length	unit identifier	device address	command code 6H	address H i Lo	register value Hi Lo	CRC Lo Hi
RTU	——	——	——	——	1byte	1byte	2 bytes	2 bytes	2 bytes
TCP	2bytes _	2bytes _	2bytes	1 byte	——				——

- Command code : The command code for reading multiple registers is fixed at 6
- Register address : the address of the register to be operated
- Register value: the value of the register that needs to be operated

for writing a single register is as follows :

protocol	address field					function code	data		error checking
	transaction meta identifier	protocol identifier	length	unit identifier	device address	command code 6H	address H i Lo	register value Hi Lo	CRC Lo Hi
RTU	——	——	——	——	1byte	1byte	2 bytes	2 bytes	2 bytes
TCP	2bytes _	2bytes _	2bytes	1 byte	——				——

- Address: Same as the request
- Command code : consistent with the request
- Register address: consistent with the request
- Register value: consistent with the request

exception response ADU for writing a single register is as follows :

protocol	address field					function code	data	error checking
	transaction meta identifier	protocol identifier	length	unit identifier	device address	command code 86H	error code	CRC Lo Hi
RTU	——	——	——	——	1byte	1byte	1byte	2 bytes
TCP	2bytes _	2bytes _	2bytes	1 byte	——			——

4. Write multiple registers

writing multiple registers is as follows :

protocol	address field					function code	data				error checking
	transaction meta identifier	protocol identifier	length	unit identifier	device address	command code 10H	register address H i Lo	number of registers Hi Lo	Bytes	register value Hi Lo	CRC Lo Hi
RTU	——	——	——	——	1byte	1byte	2 bytes	2 bytes	1byte	2bytes (1st register)	2 bytes
TCP	2bytes _	2bytes _	2bytes	1 byte	——						——
										...	
										2bytes (1st register)	

- Command code : The command code for reading multiple registers is fixed at 10H
- Register address : the first register address to be operated
- Number of registers : The number of registers to be operated . When the area to be operated is the tag memory area , the value range is 1≤N≤1 20 , and in other cases, the value range is 1≤N≤1 21
- Number of bytes : the total number of bytes occupied by the register value , 2*number of registers
- Register value: the value of the register that needs to be operated

writing multiple registers is as follows :

protocol	address field					function code	data		error checking
	transaction meta identifier	protocol identifier	length	unit identifier	device address	command code 10H	register address H i Lo	number of registers Hi Lo	CRC Lo Hi

RTU	——	——	——	——	1byte	1byte	2 bytes	2 bytes	2 bytes
TCP	2bytes _	2bytes _	2bytes	1 byte	——				——

- Command code : consistent with the request
- Register address: consistent with the request
- Number of registers: as requested

abnormal response ADU for writing multiple registers is as follows :

protocol	address field					function code	data	error checking
	transaction meta identifier	protocol identifier	length	unit identifier	device address	command code 90H	error code	CRC Lo Hi
RTU	——	——	——	——	1byte	1byte	1byte	2 bytes
TCP	2bytes _	2bytes _	2bytes	1 byte	——			——

5. Write a single coil

The request ADU for writing a single coil is as follows :

protocol	address field					function code	data		error checking
	transaction meta identifier	protocol identifier	length	unit identifier	device address	command code 5H	coil address H i Lo	coil value Hi Lo	CRC Lo Hi
RTU	——	——	——	——	1byte	1byte	2 bytes	2 bytes	2 bytes
TCP	2bytes _	2bytes _	2bytes	1 byte	——				——

- Address: slave station device address, networking application 1-16 , point -to-point communication 0
- Command code : The command code for reading multiple registers is fixed at 5
- Coil address : the address of the coil that needs to be operated
- Coil value: the value of the coil to be operated , 0 or 1

The normal response ADU for writing a single coil is as follows :

protocol	address field					function code	data		error checking
	transaction meta identifier	protocol identifier	length	unit identifier	device address	command code 5H	coil address H i Lo	coil value Hi Lo	CRC Lo Hi
RTU	——	——	——	——	1byte	1byte	2 bytes	2 bytes	2 bytes
TCP	2bytes _	2bytes _	2bytes	1 byte	——				——

- Command code : consistent with the request
- Coil address: consistent with the request
- Coil value: consistent with the request

abnormal response ADU for writing a single coil is as follows :

prot	address field	function	data	error

ocol						code		checking
	transaction meta identifier	protocol identifier	length	unit identifier	device address	command code 85H	error code	CRC Lo Hi
RTU	——	——	——	——	1byte	1byte	1byte	2 bytes
TCP	2bytes _	2bytes _	2bytes	1 byte	——			——

6 .3 Product Reset

The reader uses a coil to simulate the reset pin of the RFID device, pull the coil low, and the RFID will restart the software immediately.

coil address	Operation method	operation command
0x FFFF	set to 0	Write a single coil, command value 5

Note : The reader will not respond to the reset operation.

6.4 Error code

The error code includes two parts : The error code returned by the MODBUS command . This part is for compatibility with the MODBUS protocol. The custom error code stored in the F001H register is defined as follows :

error code	definition	Description
00H	no error	
0 1H	command code error	The command code used does not support
0 2H	wrong address	An address that does not exist , or a write operation to a read-only address
0 3H	data error	Write operation of system configuration register using illegal
0 4H	Equipment abnormality	equipment failure
0 BH	No response	This error occurs when the tag is not in the read zone or the tag does not respond properly to the command . At this time, more detailed information can be obtained from the custom error code (F001H register) .

Custom error codes are as follows :

error code		definition	Description
decimal	hexadecimal		
1 44	9 0H	no tag response	The tag may not be in read range at this time
1 45	9 1H	RF data error	At this time, there may be strong electromagnetic interference causing data transmission errors , or half of the data transmission tags leave the reading area
1 47	9 3H	Tag memory lock	Tag memory has been locked and writing is prohibited
149	9 5H	tab left	Read half of the data , the tag leaves
150	9 6H	tab left	Write half of the data , the tab leaves
161	A1H	Abnormal RF data transmission	RF data cannot be sent out
1 76	B0H	Parameter error	

7. appendix

7.1 Communication Cable Description

1. RS485 communication cable description

The RS485 communication cable is: A CODE M12 female head (5 pins), internal thread and inner hole - bare wire , the pin definition of the cable is as follows:

	pin	definition	**Matching wire color**
	1	24V	brown
	2	RS485_A	white
	3	0V	blue
	4	RS485_B	black
	5	PE	Shield

2. Ethernet communication cable description

The Ethernet communication cable is: A CODE M12 female head (8 pins), internal threaded inner hole - bare wire + RJ45 male head , the pin definition of the cable is as follows:

	M12 connector PIN pin	**defini tion**	**Matching wire color**	RJ45 connector PIN pin	
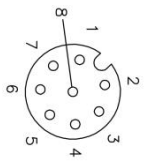	1	24V	red (brown)	OPEN	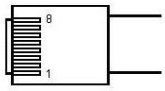
	2	NC	——		
	3	0V	black (blue)	OPEN	
	4	NC	——		
	5	TD+	orange white	1	
	6	TD- _	orange	2	
	7	R D+	green and white	3	
	8	R D -	green	6	

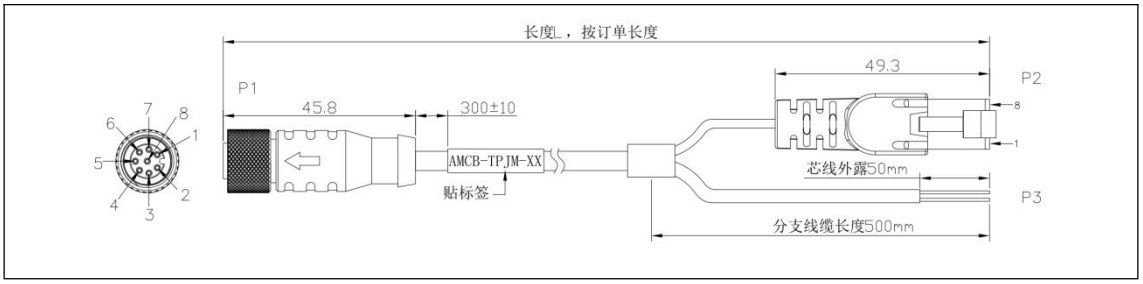
长度L，按订单长度
49.3
P2
P1
45.8
300±10
7
8
6
1
5
2
4
3
AMCB-TP.JM-XX
贴标签
芯线外露50mm
P3
分支线缆长度500mm

7.2 Data carrier Selection Manual

1. Anti-metal data carrier

Product number	RF-HZMTY 80M-112	RF-HZMTY80 M-2K	RF-HZMTY10 0M-112	RF-HZMTY10 0M-2K	RF-HZMTC 1208M-112	RF-HZMTC 1208M-2K	RF-HZMTY 300M-112	RF-HZMTY 300M-2K
Product Image								
working frequency	13.56MHz		13.56MHz		13.56MHz		13.56MHz	
air protocol	ISO 15693		ISO 15693		ISO 15693		ISO 15693	
Reading distance	0-8mm		0-12mm		0-12mm		0- 5 0mm	
chip	Icode SLIX	MB 89R118C	Icode SLIX	MB 89R118C	Icode SLIX	MB 89R118C	Icode SLIX	MB 89R118C
user memory	112 bytes	2000 bytes	112 bytes	2000 bytes	112 bytes	2000 bytes	112 bytes	2000 bytes
memory type	EEPROM	FRAM	EEPROM	FRAM	EEPROM	FRAM	EEPROM	FRAM
Erase times	100,000 times	10 billion times	100,000 times	10 billion times	100,000 times	10 billion times	100,000 times	10 billion times
Data retention time	10 years		10 years		10 years		10 years	
size	ϕ8*4.5mm		Φ10*4.5mm		11.8*7.8*4.5mm		ϕ30 * 4mm	
Shell material	PBT		PBT		PBT		PPS	
a fixed way	sticky		sticky		sticky		screw fixed	
IP rating	IP68		IP68		IP68		IP67	
Operating temperature	-40 ~ 70℃		-40 ~ 70℃		-40 ~ 70℃		-25 ~ 70℃	
storage temperature	-40 ~ 85℃		-40 ~ 85℃		-40 ~ 85℃		-40 ~ 85℃	
metal resistance	metal surface mount		Flush mountable in metal		Flush mountable in metal		metal surface mount	

Note: The reading distance of the tag is related to the installation environment and the reading head used.

2. Non-anti-metal data carrier

Product number	RF-HZMTY200-112	RF-HZMTY250-112	RF-HZMTY300-112	RF-HZMTY300-2K	RF-HZMTY500-112	RF-HZMTY500-2K
Product Image						
working frequency	13.56MHz	13.56MHz	13.56MHz		13.56MHz	
air protocol	ISO 15693	ISO 15693	ISO 15693		ISO 15693	
Reading distance	0-50mm	0-80mm	0- 9 0mm		0-1 2 0mm	
chip	Icode SLIX	Icode SLIX	Icode SLIX	MB 89R118C	Icode SLIX	MB 89R118C
user memory	112 bytes	112 bytes	112 bytes	2000 bytes	112 bytes	2000 bytes
memory type	EEPROM	EEPROM	EEPROM	FRAM	EEPROM	FRAM
Erase times	100,000 times	100,000 times	100,000 times	10 billion times	100,000 times	
Data retention time	10 years	10 years	10 years		10 years	
size	ϕ20*3mm	ϕ25*3mm	ϕ30 * 4mm		ϕ50*3.5mm	
Shell material	PPS	PPS	PPS		PPS	
a fixed way	sticky	screw fixed	screw fixed		screw fixed	
IP rating	IP67	IP67	IP67		IP67	
Operating temperature	-25 ~ 70℃	-25 ~ 70℃	-25 ~ 70℃		-25 ~ 70℃	
storage temperature	-40 ~ 105 ℃	-40 ~ 105 ℃	-40~ 150 ℃		-40 ~ 125 ℃	
metal resistance	Not resistant to metal	Not resistant to metal	Not resistant to metal		Not resistant to metal	

Note: The reading distance of the tag is related to the installation environment and the reading head used.

7.3 Reading range table

Maximum reading distance unit (mm)	RF-H Y 18 R series	RF-HY30R series	RF-HZ50L series	RF-HZ100L series	Remark
RF-HZMTY80M -2K	8	8	14	——	ON Metal
RF-HZMTY100M -2K	12	16	20	——	ON Metal
RF-HZMTC 1208M -2K	12	16	20	——	ON Metal
RF-HZMTY200-112	32	38	45	60	
RF-HZMTY200-2K	32	42	45	60	
RF-HZMTY240-112	36	44	50	70	
RF-HZMTY250-112	39	46	55	80	
RF-HZMTY300-112	42	55	67	87	
RF-HZMTY300-2K	42	51	65	84	
RF-HZMTY300M-112	21	26	36	44	ON Metal
RF-HZMTY500-112	53	63	80	115	
RF-HZMTY500-2K	53	63	80	115	
RF-HZMTZ40M-112	30	34	45	55	On Metal

Note: The reading distance of the tag is related to the installation environment and the reading head used.

Federal Communications Commission (FCC) Statement. This device complies with part 15 of the FCC Rules. Operation is subject to the following two conditions:

(1) This device may not cause harmful interference, and

(2) this device must accept any interference received,

including interference that may cause undesired operation. Note: This equipment has been tested and found to comply with the limits for a Class B digital device, pursuant to part 15 of the FCC Rules. These limits are designed to provide Reasonable protection against harmful interference in a residential installation. This equipment generates, uses and can radiate radio frequency energy and, if not installed and used in accordance with the instructions, may cause harmful interference to radio communications. However, there is no guarantee that interference will not occur in a particular installation. If this equipment does cause harmful interference to radio or television reception, which can be determined by turning the equipment off and on, the user is encouraged to try to correct the interference by one or more of the following measures:

•Reorient or relocate the receiving antenna.

•Increase the separation between the equipment and receiver.

•Connect the equipment into an outlet on a circuit different from that to which the receiver is connected.

•Consult the dealer or an experienced radio/TV technician for help.

Warning: Changes or modifications made to this device not expressly approved by

may void the FCC authorization to operate this device.Note: The manufacturer is not responsible for any radio or TV interference caused by unauthorized modifications to this equipment. Such modifications could void the user's authority to operate the equipment.

RF exposure statement:

This device complies with FCC RF radiation exposure limits set forth for an uncontrolled environment. The device is installed and operated without restriction.